International Journal of Engineering and Advanced Technology (IJEAT)
ISSN: 2249-8958 (Online), Volume-9 Issue-2, December, 2019

Design Development of a Coffee Maker using Design for Assembly Method

M. H. M. Teni, A. Naroh, K. A. A. Maliki, A. Tukiran

***Abstract:** The purpose of this research is to evaluate the design of a coffee maker by using Boothroyd Dewhurst Method which this method is one of the Design for Assembly (DFA) methods. DFA method will help to simplify the assembly designs of the product that will leads to significant cost savings and less tine to produce a product. Main objective of DFA is to estimate the difficulty of assembly, eliminate unnecessary parts and assembly tooling and design products that are less costly to manufacture. The study will focus on analyzing the current design of coffee maker, reducing the number of parts, comparing the design efficiency and the cost between the current and improved design. The product is evaluated by using Manual Handling Table and Manual Insertion Table. The results of current design are used to make improvement to the coffee maker. Then, new design is made by eliminating or combining the old design so that total cost and time for assemble the coffe maker is reduced. Lastly, comparison is made between new and old design.*

***Keywords:** Design for Assembly; Boothroyd Dewhurst Method; Coffee Maker; Design Efficiency.*

I.INTRODUCTION

Design for Assembly is a methodology for evaluating part designs and the overall design of an assembly [1]. The method of DFA will lead way to identify unnecessary parts in an assembly and to reduce the cost in assembly times. Using DFA, the cost contribution of each part can be evaluate and the step of simplifying the product concept through part reduction strategies will be implement. These strategies involve incorporating as many features into one part as is economically feasible. The target of DFA is become an elegant product by fewer the product parts that is both functionally efficient and easy to assemble.

The aim of DFA is to reduce the assembly cost by simplify the product. However, by applying DFA there are effect with the consequences such as quality improvement and reliability, reduction in production equipment and part inventory. These secondary benefits often more significant to reduce cost in assembly.

DFA acknowledge the validity to analyze both each of part design and the whole product for any assembly problems early in the design stage. We may define DFA as "a process for improving product design for easy and low-cost assembly, focusing on functionality and on assemblability concurrently" [2].

Boothroyd Dewhurst method is found by Dr. Geoffrey Boothroyd and Dr. Peter Dewhurst and their research on this method were begin in early 1970's [3].

Revised Manuscript Received on December 30, 2019.
* Correspondence Author
M. H. M. Teni, Politeknik Ungku Omar, Perak, Malaysia
A. Naroh, Politeknik Ungku Omar, Perak, Malaysia
K. A. A. Maliki, Politeknik Ungku Omar, Perak, Malaysia
A. Tukiran, Politeknik Ungku Omar, Perak, Malaysia

This DFA method were used to make an estimation for the manual assembly time and the assembly cost for a product by recognizing the major key in cutting down the assembly costs with minimizing the number of parts.

The process starts with evaluation of part to determine whether it is necessary to eliminate or merging with other parts in the assembly process. Secondly the time assembly time had jog down by taking the time to hold, control and place the part in assembling process. By doing these two procedures the design efficiency can be calculated and can be used to make a designs comparison.

1.1 Alpha and Beta Angle

The product must be disassembled first and the orientation of each part perpendicular to the insertion, α and β angle must be determine as Fig. 1.

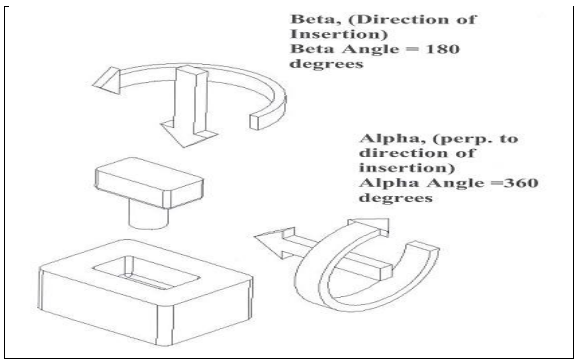

Fig. 1 Alpha and Beta angle illustration

Symmetrical of design will influence the time taken to hold and orienting the parts because the assembly process basically involves minimum two components; firstly is the part to be placed and second the part or assembly (receptacle) into which the part is inserted [4]. The value of symmetry angle further can be used as references to determine handling and insertion time [5].

1.2 Manual Handling Classification

A determination of a sophisticated classification scheme that involves on the part handling in assembling process were call as a handling process. In other words, the handling involve on how the part was held either within one hand with tool, two hands with manipulation, or two hands because of the large part size. Then the handling process code (in two-digit type) will be selected from the manual handling chart.

In Boothroyd Dewhurst Method, to increase the handling level of difficulty, a systematic classification system for manual handling process will be done by arranging the part features wisely according to the chart (manual handling chart).

According to Table 1, the classification numbers consists of two digits. First digit is stated vertically and second digit is stated horizontally. The first and second digits are being combined to make a handling code (00 as example) and handling time can be determining from the code (1.13s for code 00).

Table. 1 Manual Handling Classifications

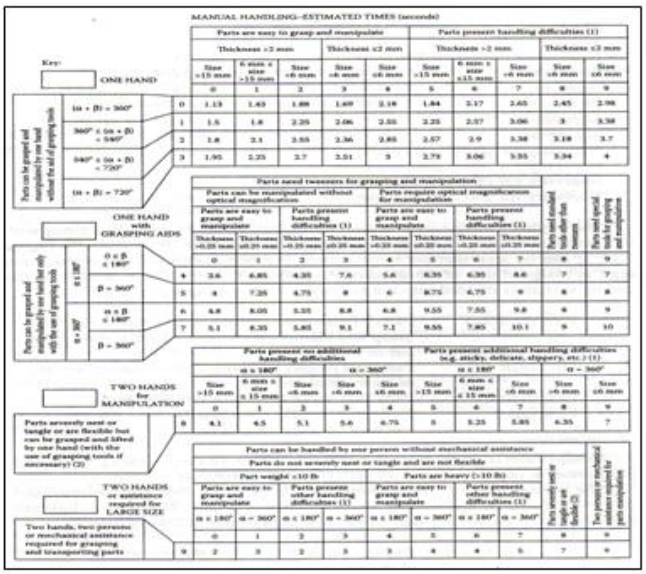

The first digit of the coding system is divided into four main groups as shown in Table 2.

Table. 2 Groups for First Digit Handling Code

Group	Digit	Explanation
I	0-3	Parts that easy to grasp and manipulate without aid of tools
II	4-7	Parts required grasping tools because their small size.
III	8	Parts severely nest or tangle but can be grasped and lifted by one hand.
IV	9	Parts required two hands, two persons or mechanical assistance in handling.

The second digit code were referring the characteristic on fragility, flexibility, stickiness, slipperiness and nesting characteristics of a part [6]. The second digit also depends on the first digit groups as shown in Table 3.

Table. 3 Groups for Second Digit Handling Code

Group	Explanation
I	Second digit classifies the size and thickness of parts.
II	Second digit classifies the part thickness, type of tool required for handling and the necessity for optical magnification during the handling process.
III	Second digit classifies the size and symmetry of part.

1.3 Manual Insertion and Fastening Classification

The manual insertion and fastening classification also have codes that consist of two digits. Table 4 shows the classification system for manual insertion and fastening along with associated definition and time standards. First digit is stated vertically and second digit is stated horizontally [6].

Table. 4 Manual Insertion and Fastening Classifications

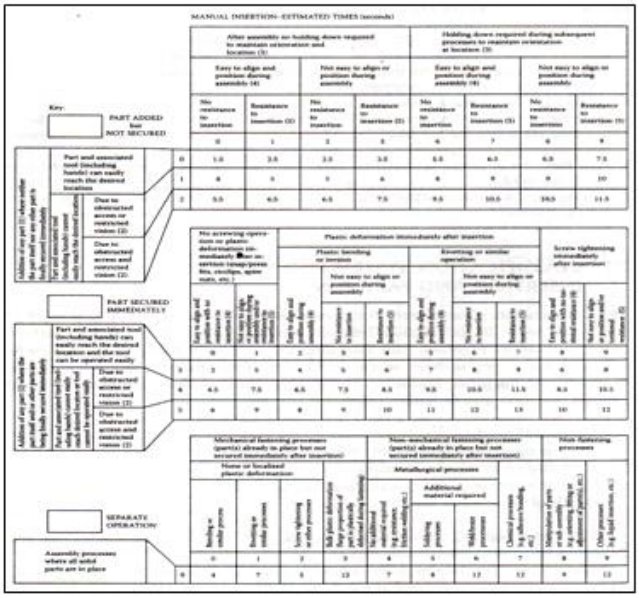

The first digits are divided into three main groups as shown at Table 5 below.

Table. 5 Groups for First Digit Insertion Code

Group	Digit	Explanation
I	0-2	Part is not secured immediately after insertion.
II	3-5	Parts secured immediately after insertion.
III	9	Another process involve after parts are already in place.

The second digits are depending on first digit's group as show in Table 6.

Table. 6 Groups for Second Digit Insertion Code

Group	Explanation
I	Second digit classifies the ease of engagement of parts and whether holding down is required to maintain orientation or location
ii	Second digit classifies the ease of engagement of parts and whether the fastening operation involves a simple snap fit, screwing operation, or plastic deformation process.
III	Second digit classifies mechanical, metallurgical, and chemical process

A design cost can be reduced by doing a simplification and combining or reducing parts. Simplification of the part is a step by increasing the part size, making it easy to be hold and manipulate. Secondly the combination or reducing of part is a step which make the design of the part simpler and easy to assemble [7].

Total operation time is the sum of the handling and insertion times multiplied by the number of operations.

To achieve the minimum number of parts for the assembling process theoretically, it can be determined from the following questions:

(i) Does the part move relative to all other parts already assembled during the operation of the product?
(ii) Must the part be of a different material than other parts?
(iii) In order to allow assembly or disassembly, must the part be separated from all other parts?

The part will be labeled as '0' if the answer for the questions were no and be candidated for combination. Otherwise, it will label with '1'. By using this method, the theoretical minimum number (Nm) of parts can be determined. It will represent the minimum number for the part that satisfy the functionality of the product. Then the manual assembly design efficiency can be calculated from the formula [8].

$$\text{Design Efficiency} = (3s\ Nm / Tm) \times 100\% \qquad (1)$$

Where Nm is the theoretical minimum number of parts, and Tm is the total manual assembly time.

The basic assembly time, three second (3s) for one part is idealized by Boothroyd and Dewhurst where one second to handle, one second to insert and one second on average to secure [9]. The deciding of 3 seconds as an 'assembly time unit' was not necessary for product evaluation but it provide a precise relative comparison for each design. Utilizing the metric was important for redesign effort using Design for Assembly method [10].

This study utilize the coffee maker design must be reviewed to minimize the number of parts and simplify assembly process. It also should be review from manufacturing processes for each part and choose the most cost-effective ones, such as elimination or merging of few parts into one. The study and analyzing the current design is consisting of disassemble products, analyze each part, find theoretical minimum number of parts, determine operation time, operation cost and design efficiency. Lastly, comparison is made between new and old design.

II.EXPERIMENTAL

This section explains details about the methodology that involves in this research to achieve the objectives of this research.

2.1 Product Selection

This project will focus on improvement design of a coffee maker available in the market. The model selected is Tefal brand. Selection type of product is based on the criteria that the current design of the product can be improved to reduce the cost of production and improving the design efficiency. Fig. 2 below show the model of coffee maker

Fig. 2 The Model of Coffee Maker

2.2 Dissemble Process

The coffee maker must be disassembled as shown in Fig. 3. The parts name, material and the processed involved when producing the parts must be determining. Each part may be produced from different type of materials and processes. This step is very useful as it provides important information when improving the current design of coffee maker.

Fig. 3 Parts of Coffee Maker Disassembled

2.3 Parts Name, Quantity and Function

As every part of coffee maker play different roles and functions, each of them may be produced from different type of material to meet the required properties. Table 7 shows material, function and quantity of each part. This information is based on the observation of each part complexity and the properties they need to fulfill.

Table. 7 Parts Name, Quantity and Function of Coffee Maker

Part No	Name	Quantity	Material	Function
1	Filter top cover 1	1	plastic	to cover casing water inlet to coffee filter
2	Coffee filter	1	plastic	to filter coffee powder and mix with water
3	Filter casing	1	plastic	to hold the filter with filter holder
4	Filter bottom cover	1	plastic	to cover the appearance of the water valve
5	Filter holder	1	plastic	as a mechanism to swing out the filter casing
6	Water tank 1	1	plastic	to reserve water
7	Water tank 2	1	plastic	to reserve water
8	Outlet tube	1	rubber	to flow the water into aroma housing
9	Connector tube 1	1	rubber	to connect connecter tube 1 with aroma housing
10	Water inlet pipe	1	plastic	as an inlet for water direct to the filter
11	Water level connector	1	rubber	to connect water tank with water level meter
12	Water level meter	1	plastic	to measure the water level
13	Meter bubble	1	plastic	to show the water level
14	Aroma valve adjuster	1	plastic	to adjust the aroma valve
15	Aroma valve	1	plastic	to flow the water into coffee filter housing
16	Aroma valve top cover	1	plastic	to secure the water in aroma housing
17	Filter top cover 2	1	plastic	as a mechanism to flow the water into coffee filter
18	Aroma button	1	plastic	as a controller for aroma valve
19	Water inlet cover	1	rubber	as a cover to pour the water into water tank
20	Glass can	1	glass	to reserve coffee
21	Glass can holder	1	plastic	as a holder of glass can while use
22	Glass can cover	1	plastic	as a couple for glass can top cover
23	Water outlet controller	1	plastic	to control the water flow smoothly
24	Glass can top cover	1	plastic	to cover the top area of glass can
25	Warm plate side cover	1	plastic	as a security for a hot device
26	Warm plate	1	metal	to warm the inlet water and coffee in glass can
27	Connecter tube 2	1	rubber	as a connector between warm plate and outlet tube
28	Warm plate bottom cover	1	plastic	as a housing to cover bottom of warm plate
29	Warm plate top cover	1	plastic	to tight water tank together by screw for more stability
30	Sand filter	1	plastic	to filter the water in come
31	Y trade screw	1	metal	to tight the warm plate top cover with water tank
32	Base rubber (small)	2	rubber	to prevent coffee maker than sliding on smooth surface
33	Base rubber (medium)	2	rubber	to prevent coffee maker than sliding on smooth surface

From the Table 7, the total parts, Tm are 35 parts

2.4 Theoretical Minimum Number

The next step is to determine the theoretical minimum number (Nm) of the parts by listing all parts in the product. Then the Nm will be obtained by evaluating the parts list which 1 preferred as essential part and 0 as non-essential part, as shown in Table 8.

Table. 8 Theoretical Minimum Number of Coffee Maker, Nm

Part No	Name	Quantity	Theoretical Minimum Number, Nm
1	Filter top cover 1	1	1
2	Coffee filter	1	1
3	Filter casing	1	1
4	Filter bottom cover	1	0
5	Filter holder	1	1
6	Water tank 1	1	1
7	Water tank 2	1	1
8	Outlet tube	1	1
9	Connector tube 1	1	1
10	Water inlet pipe	1	1
11	Water level connector	1	0
12	Water level meter	1	0
13	Meter bubble	1	0
14	Aroma valve adjuster	1	1
15	Aroma valve	1	1
16	Aroma valve top cover	1	1
17	Filter top cover 2	1	1
18	Aroma button	1	1
19	Water inlet cover	1	1
20	Glass can	1	1
21	Glass can holder	1	1
22	Glass can cover	1	1
23	Water outlet controller	1	1
24	Glass can top cover	1	1
25	Warm plate side cover	1	1
26	Warm plate	1	1
27	Connecter tube 2	1	1
28	Warm plate bottom cover	1	1
29	Warm plate top cover	1	1
30	Sand filter	1	1
31	Y trade screw	1	1
32	Base rubber (small)	2	1
33	Base rubber (medium)	2	1

From Table 8, the total theoretical minimum number, Nm is 29.

2.5 Determine Operation Time

The value of α + β can be used to help determining the estimate handling time and insertion time for each part of electric kettle. The handling and insertion time can be determined from Manual Handling Chart and Manual Insertion Chart. Table 9 shows results data for the current coffee maker design.

Table. 9 Assembly Time of Coffee Maker

Operation	Name	No of item	α	B	α+β	Handling code	Handling time	Insertion Code	Insertion Time	Total Operating Time
1	Warm plate bottom cover	1	360	360	720	3 0	1.95	0 0	1.5	3.45
2	Base rubber (small)	2	180	0	180	0 4	2.18	4 1	7.5	19.36
3	Base rubber (medium)	2	180	0	180	0 4	2.18	4 1	7.5	19.36
4	Warm plate	1	360	360	720	3 0	1.95	0 1	2.5	4.45
5	Warm plate top cover	1	360	360	720	3 0	1.95	0 1	2.5	4.45
6	Warm plate side cover	1	360	360	720	3 0	1.95	0 1	2.5	4.45
7	Connecter tube 2	1	180	0	180	0 0	1.13	0 0	1.5	2.63
8	Water tank 2	1	360	360	720	3 0	1.95	0 1	2.5	4.45
9	Water tank 1	1	360	360	720	3 0	1.95	0 2	2.5	4.45
10	Y trade screw	1	360	0	360	1 9	3.38	4 9	10.5	13.88
11	Sand filter	1	360	360	720	3 0	1.95	3 0	2	3.95
12	Outlet tube	1	180	0	180	0 4	2.18	0 0	1.5	3.68
13	Water level connector	1	180	0	180	0 1	1.43	3 1	5	6.43
14	Water level meter	1	360	360	720	3 0	1.95	3 0	2	3.95
15	Meter bubble	1	0	0	0	0 4	2.18	0 0	1.5	3.68
16	Connector tube 1	1	180	0	180	0 0	1.13	0 1	2.5	3.63
17	Filter holder	1	360	360	720	3 5	2.73	0 7	6.5	9.23
18	Filter top cover 2	1	360	360	720	3 5	2.73	3 1	5	7.73
19	Aroma valve top cover	1	360	360	720	3 0	1.95	0 2	2.5	4.45
20	Aroma valve	1	360	90	450	1 9	3.38	0 0	1.5	4.88
21	Aroma valve adjuster	1	360	360	720	3 9	4	3 0	2	6
22	Filter holder	1	360	90	450	1 5	2.25	0 0	1.5	3.75
23	Filter top cover 1	1	360	360	720	3 0	1.95	3 0	2	3.95
24	Aroma button	1	360	90	450	1 8	3	3 1	5	8
25	Water inlet cover	1	360	360	720	3 0	1.95	3 0	2	3.95
26	Filter casing	1	360	360	720	3 0	1.95	0 0	1.5	3.45
27	Filter bottom cover	1	360	360	720	3 3	2.51	3 0	2	4.51
28	Coffee filter	1	360	360	360	3 0	1.95	3 0	2	3.95
29	Glass can	1	360	360	180	0 3	1.69	0 0	1.5	3.19
30	Glass can holder	1	360	360	720	3 0	1.95	9 7	12	13.95
31	Glass can cover	1	360	360	720	3 3	2.51	3 0	2	4.51
32	Glass can top cover	1	360	360	360	1 3	2.06	3 0	2	4.06
33	Water outlet controller	1	360	360	720	3 3	2.51	3 0	2	4.51

From the Table 9, the total operation time is 204.27 second. Fig. 4 show the current designs of coffee maker have been drawn by using CATIA software.

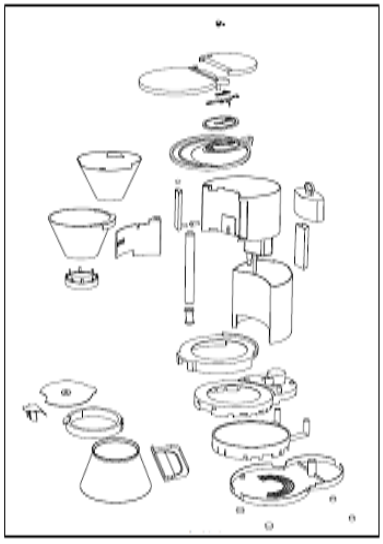

Fig. 4 Explode Drawing of Coffee Maker Using CATIA Software

2.6 Assembly Cost and Design Efficiency

Assembly cost can be calculated by using equation below. Noted that monthly salary rate for an operator is RM 1500 by working 8 hours per day for 26 days. Therefore, salary rate of an operator for one second is RM 0.002.

Assembly cost = Total operation time x Salary Rate
= 204.27 x RM 0.002
= RM 0.41/unit

Design Efficiency = (3s Nm / Tm) x 100%
= ((3 x 29) / 204.27) x 100%
= 42.6%

III.RESULTS AND DISCUSSION

Improvement by using Design for Assembly (DFA) method can be apply any steps of elimination of parts, redesign and combination of one part to another. The goal of improving current design is to reduce the number of parts, hence, will increase the design efficiency and also reducing the cost of assembly. A few changes to the design were obtained from the analysis, which can be applied if the cost for manufacturing are reducing significantly. The change of designs are listed as figured below:

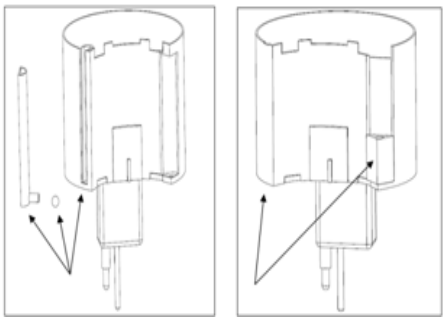

(a) **(b)**

Fig. 5 Eliminate water level by changing tank material (a) old design (b) new design

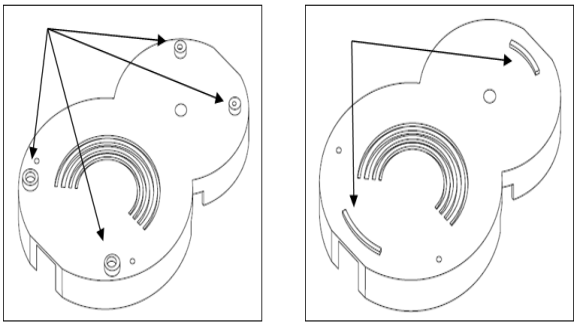

(a) (b)

Fig. 6 Combine rubber base to become two part by change the design (a) old design (b) new design

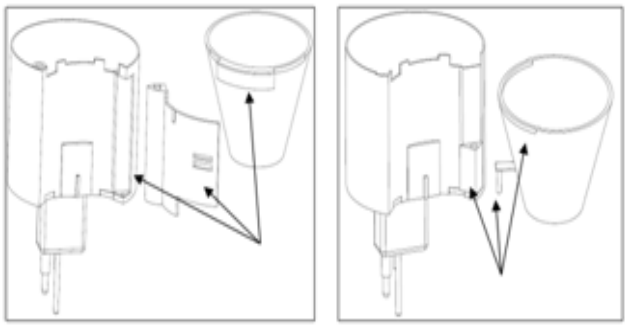

(a) (b)

Fig. 7 Eliminate filter holder by redesigning (a) old design (b) new design

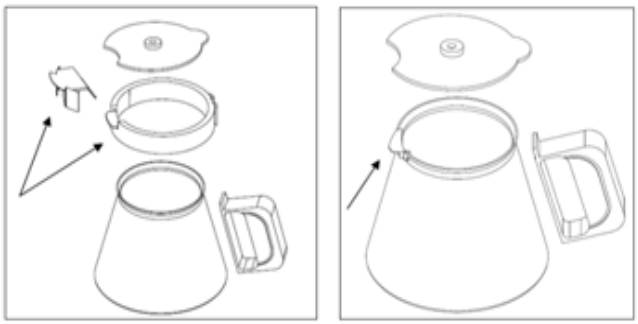

(a) (b)

Fig. 8 Eliminate can cover and water controller by redesigning (a) old design (b) new design

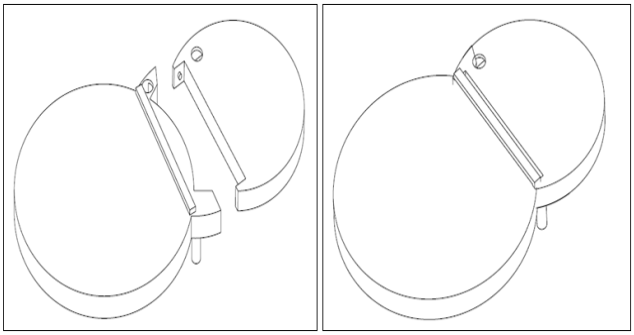

(a) (b)

Fig. 9 Combine filter cover to tank cover (a) old design (b) new design

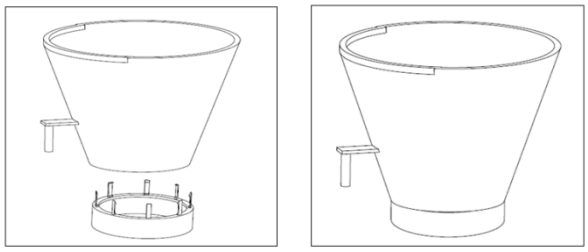

Fig. 9 Combine filter cover with filter casing (a) old design (b) new design

3.1 Analysis of New Design for Coffee Maker

From the results, the total parts are reduced 28.57%, from 35 to 25 parts as shown in Table 10 and the total theoretical minimum number, Nm is 24 shown in Table 11.

Table. 10 Parts Name, Quantity and Function for New Coffee Maker

Part No	Name	Quantity	Material	Function
1	Filter top cover 1	1	plastic	to cover casing water inlet to coffee filter
2	Coffee filter	1	plastic	to filter coffee powder and mix with water
3	Filter casing	1	plastic	to hold the filter with filter holder
4	Water tank 1	1	plastic	to reserve water
5	Water tank 2	1	plastic	to reserve water
6	Outlet tube	1	rubber	to flow the water into aroma housing
7	Connector tube 1	1	rubber	to connect connecter tube 1 with aroma housing
8	Water inlet pipe	1	plastic	as an inlet for water direct to the filter
9	Aroma valve adjuster	1	plastic	to adjust the aroma valve
10	Aroma valve	1	plastic	to flow the water into coffee filter housing
11	Aroma valve top cover	1	plastic	to secure the water in aroma housing
12	Filter top cover 2	1	plastic	as a mechanism to flow the water into coffee filter
13	Aroma button	1	plastic	as a controller for aroma valve
14	Glass can	1	glass	to reserve coffee
15	Glass can holder	1	plastic	as a holder of glass can while use
16	Glass can top cover	1	plastic	to cover the top area of glass can
17	Warm plate side cover	1	plastic	as a security for a hot device
18	Warm plate	1	metal	to warm the inlet water and coffee in glass can
19	Connecter tube 2	1	rubber	as a connector between warm plate and outlet tube
20	Warm plate bottom cover	1	plastic	as a housing to cover bottom of warm plate
21	Warm plate top cover	1	plastic	to tight water tank together by screw for more stability
22	Sand filter	1	plastic	to filter the water in come
23	Y trade screw	1	metal	to tight the warm plate top cover with water tank
24	Base rubber	2	rubber	to prevent coffee maker than sliding on smooth surface

Table. 11 Theoretical Minimum Number for New Coffee Maker, Nm

Part No	Name	Quantity	Theoretical Minimum Number, Nm
1	Filter top cover 1	1	1
2	Coffee filter	1	1
3	Filter casing	1	1
4	Water tank 1	1	1
5	Water tank 2	1	1
6	Outlet tube	1	1
7	Connector tube 1	1	1
8	Water inlet pipe	1	1
9	Aroma valve adjuster	1	1
10	Aroma valve	1	1
11	Aroma valve top cover	1	1
12	Filter top cover 2	1	1
13	Aroma button	1	1
14	Glass can	1	1
15	Glass can holder	1	1
16	Glass can top cover	1	1
17	Warm plate side cover	1	0
18	Warm plate	1	1
19	Connecter tube 2	1	1
20	Warm plate bottom cover	1	1
21	Warm plate top cover	1	1
22	Sand filter	1	1
23	Y trade screw	1	1
24	Base rubber (small)	2	2

From Table 11, the total theoretical minimum number, Nm is 24.

Table. 12 Assembly Time for New Coffee Maker

Operation	Name	No of item	α	B	α+β	Handling code	Handling time	Insertion Code	Insertion Time	Total Operating Time
1	Warm plate bottom cover	1	360	360	720	3 0	1.95	0 0	1.5	3.45
2	Base rubber	2	360	360	720	3 4	3.00	4 1	7.5	10.5
3	Warm plate	1	360	360	720	3 0	1.95	0 1	2.5	4.45
4	Warm plate top cover	1	360	360	720	3 0	1.95	0 1	2.5	4.45
5	Warm plate side cover	1	360	360	720	3 0	1.95	0 1	2.5	4.45
6	Connecter tube 2	1	180	0	180	0 0	1.13	0 0	1.5	2.63
7	Water tank 2	1	360	360	720	3 0	1.95	0 1	2.5	4.45
8	Water tank 1	1	360	360	720	3 0	1.95	0 2	2.5	4.45
9	X trade screw	1	360	0	360	1 9	3.38	4 9	10.5	13.88
10	Water inlet pipe	1	360	180	540	2 2	2.55	3 0	2.0	4.55
11	Sand filter	1	360	360	720	3 0	1.95	3 0	2.0	3.95
12	Outlet tube	1	180	0	180	0 4	2.18	0 0	1.5	3.68
13	Connector tube 1	1	180	0	180	0 0	1.13	0 1	2.5	3.63
14	Filter top cover 2	1	360	360	720	3 5	2.73	3 1	5.0	7.73
15	Aroma valve top cover	1	360	360	720	3 0	1.95	0 2	2.5	4.45
16	Aroma valve	1	360	90	450	1 9	3.38	0 0	1.5	4.88
17	Aroma valve adjuster	1	360	360	720	3 9	4.00	3 0	2.0	6
18	Filter top cover 1	1	360	360	720	3 0	1.95	3 0	2.0	3.95
19	Aroma button	1	360	90	450	1 8	3.00	3 1	5.0	8
20	Filter casing	1	360	360	720	3 0	1.95	0 0	1.5	3.45
21	Coffee filter	1	360	360	360	3 0	1.95	3 0	2.0	3.95
22	Glass can	1	360	360	180	0 3	1.69	0 0	1.5	3.19
23	Glass can holder	1	360	360	720	3 0	1.95	9 7	12	13.95
24	Glass can top cover	1	360	360	720	1 3	2.06	3 0	2.0	4.06
25	Put in the box	1	360	360	720	3 0	1.95	3 0	2.0	3.95

From the Table 12, the total operation time is 136.08 second.

Noted that salary rate of an operator for one second is RM 0.002.

Assembly cost = 136.08 x RM 0.002
= RM 0.27/unit

Design Efficiency = (3s Nm / Tm) x 100%
= ((3 x 24) / 136.08) x 100%
= 52.9%

Table. 13 Comparison of performance between old design and new design

	Old Design	New Design
Total Parts	35 units	24 units
Total Operations Time	204.27 s	136.08 s
Total Cost	RM 0.41/unit	RM 0.27/unit
Design Efficiency	42.6 %	52.9 %

As shown in Table 13, there are significant improvement between old design of coffee maker and the new design, in terms of design efficiency, assembly cost, and also the number of part.

For design efficiency, the improvement is increased from the old design for about 52.9%. This is due to reduction of part count as well as the total operation time.

Assembly cost also reduced RM0.41 from to RM0.27, decreasing about 34% from original cost. This is due to the reduction of total operating time from 204.27s to 136.08s. Saving cost will allow the company to make larger production and also bigger profit. Reduction in number of part will result in less time to assembly the product, hence reduce the operation cost. Fig. 10 show the new design of coffee maker.

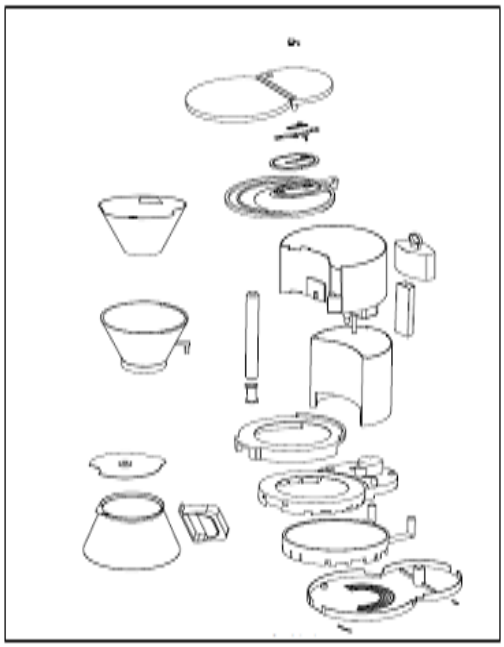

Fig. 10 New design of coffee maker

IV.CONCLUSION

Based on the study conducted, the conclusion follows can be made

i. It can be concluded that the Design for Assembly (DFA) method is very useful to analyze current design of coffee maker.

ii. This method also very helpful in improving design efficiency and cost of operation for the product we want to analyze.

iii. Comparison of design efficiency and cost of assembly before and after improvement shows that there is significant improvement by using this method.

iv. It also can be concluded that reducing the number of parts will increase design efficiency, hence lowering the cost of assembly

The results from this study show that DFA method is very helpful and useful in reducing costs of production as well as number of parts. The effectiveness of this method inspired a company called Boothroyd Dewhurst, Inc. to develop software tools based on the implementation of DFA methods.

This study should be further continued as many improvements and related field within this study can be analyzed. This study is only theoretical calculation and improvement of product efficiency, hence the study can be furthered to run a test using all the data from analysis to determine the quality of improved design. Other criteria to be considered is the cost of production for each part, as this study only focus on cost for already assembled part. The cost calculation can be furthered for the cost of materials and mould or processes to produce each part. When improving a product, the thing to consider is whether the improvement will increase the cost in terms of materials and processes.

This study can also be furthered by applying different method of DFA, and compare which of the methods is the most efficient in improving a product design. Each of the methods could have flaws or disadvantage over one another, so the results can be compared and the most suitable method for the product to be analyzed can be selected.

ACKNOWLEDGEMENT

The authors would like to acknowledge the support of Ministry of Education Malaysia (MOE), Politeknik Ungku Omar (PUO).

REFERENCES

1. Geoffrey Boothroyd, Peter Dewhurst, Winston Knight. "Product Design for Manufacture and Assembly" by Marcel Dekker, Inc.
2. Vincent Chan and Filippo A. Salustri. "Design for Assembly".
3. Xiaofan Xie. "Design for Manufacture and Assembly". Dept. of Mechanical Engineering, University of Utah.
4. Chun (Chuck) Zhang and Hsu-Pin(Ben) Wang. "Robust design of assembly and machining tolerance allocations". Department of Industrial Engineering, FAMU-FSU College of Engineering, 2525 Pottsdamer St., Tallahassee, FL 32310, USA
5. Kim, G.J. Sukhan Lee Bekey, G.A. "Interleaving assembly planning and design". Manuf. System Integration Div., Nat. Inst. of Stand. & Technol., Gaithersburg, MD
6. Geoffrey Boothroyd. "Assembly Automation and Product Design", Taylor and Francis.
7. G. Boothroyd. "Design for Assembly- The Key to Design for Manufacture." Department of Industrial & Manufacturing Engineering, University of Rhode Island, Kingston
8. Henry W. Stoll. "Product Design Methods and Practices"
9. Boothroyd, G., "Design for Assembly – A Designer's Handbook", Department of Mechanical Engineering, University of Massachusetts, Amherst, Nov. 1980.
10. Miyakawa, S. and Ohashi, T., "The Hitachi Assembly Evaluation Method (AEM)," Proc. International Conference on Product Design for Assembly, Newport, Rhode Island, April 15-17, 1986.

AUTHORS PROFILE

M. H. M. Teni, Politeknik Ungku Omar, Perak, Malaysia

A. Naroh, Politeknik Ungku Omar, Perak, Malaysia

K. A. A. Maliki, Politeknik Ungku Omar, Perak, Malaysia

A. Tukiran, Politeknik Ungku Omar, Perak, Malaysia