International Journal of Engineering and Advanced Technology (IJEAT)
ISSN: 2249-8958 (Online), Volume-9 Issue-2, December, 2019

Growing Trends in Indian Farming using Internet of Things (IoT)

Y. Mohana Roopa, M. Ashoka Deepthi, Novy Jacob

Abstract*: *India is a land of different weather conditions and versatile soils. Every year Indian farmers are facing problem of sudden rain in their areas without any correct weather forecast which leads to damage of the already grown crops. The second major problem pertaining to Indian farmers is the lack of sufficient knowledge about their soil. The soil forecasting of how the soil structure is changing day by day due to different weather condition and other external factors, and which crop will be optimally suited to be grown in such soil are some of the problems common to the farmers.

This paper makes an attempt to assess and propose model solution along with developing a prototype of device using IoT for use by farmers in Indian agriculture practice. The solution proposed will have a centralized data server to analyze the data and report to the farmer the precautionary steps to be taken in advance for safety of the crops. The solution proposed have eco-friendly energy management through solar plant and wind energy which makes IoT device more portable and low cost, along with making it implementable in Indian rural sectors..

Keywords: IoT, Indian Farming, Weather Forecast, soil checkup, GPRS.

I. INTRODUCTION

Indian agriculture is still lacking use of technology to improve predictability and correction in various aspects of farming process in due course of time. This results in either poor yield or partial/ total damage of the crops. It is still a long way to go finishing the entire curriculum of devising technology, testing its efficacy and digging out the problems in its implementation in Indian agriculture system. Then again find its suitability in our ecosystem.

Here, we assess and propose model solution at the same time develop a prototype of device using IoT for use by farmers in Indian agricultural practices. The solution proposed will have a centralized data server to analyze the data and report to the farmer the precautionary steps to be taken in advance for safety of the crops. The solution proposed have eco-friendly energy management through solar plant and wind energy which makes IoT device more portable and low cost, along with making it implementable in Indian rural sectors.

Revised Manuscript Received on December 30, 2019.

* Correspondence Author

Dr. Y Mohana*, Professor of CSE , Institute of Aeronautical Engineering, Hyderabad, India.

Ms. Ashoka Deepthi, Assistant Professor of CSE, Institute of Aeronautical Engineering, Hyderabad, India.

Ms. Novy Jacob., Assistant Professor of IT, Malla Reddry College of Engineering and Technology, Hyderabad, India.

II. RELATED WORK

Availability of advanced technology and on-going research in the field of agriculture suggest various technology solutions for optimum farm yield along with crop. Use of IoT is [1] where the author used sensor network to connect real world object of agriculture.

[3] under reference suggest using Wide Area Network (WAN) based soil temperature and humidity monitoring system which uses ZigBee and GPS technology for solving the agriculture soil problem. [4] artificial neural networks to predict and provide information on crop cultivated by observing soil properties and atmospheric parameters. [5] referred, the author has shown how the Representational State Transfer (REST) Application Program Interface (API) and the internet can be used for agriculture monitoring. "Decagon 5TE soil sensor" soil sensors where used in the paper to abstracting various property of soil. [6] under reference the author has talked about use of sensors for weather forecasting, and wildlife management in the agriculture domain. [7] it is written about the connected farm concept based on IoT device which helps farms to communicate with nearby farm to exchange information. [8] Commonwealth Scientific and Industrial Research Organization (CSIRO)'s scientists have proposed uses of sensor networks on agriculture farm and mentioned about the possible changes that can be done using sensor networks in agriculture development.

The alarming situation of Indian farming the design and development of a sophisticated system using the most recent research topic of discussion namely "Application of Internet of Things (IoT)". The primary focus of this work is to make the readers aware and understand about the application of IoT in agricultural arena in an Indian setting. The proposed architectural design of the device is to make the understanding clear about each specific block through the aid of developed models and technology stacks as discussed in the paper.

It is vital to understand the functions and outputs of each block to have clarity of the whole integrated system. If one understands the IoT principle underlying such operation, then he will be in a position to appreciate the complexity of the problem and thereby develop a liking towards the application of IoT in the field of agriculture. This paper thus, makes an attempt to educate future researchers through IoT about the complexity of the problem that the Indian farmers are facing today. Further an implementation of the device on an agricultural area in rural part of India would be done as a final goal of this project. Before that our next step would be the coding, simulation and development of a prototype model of the project, which is already in process.

III. DESIGN AND IMPLEMENTATION

The main constraint in the current system is that there are many technologies available in the market which can be used to help farmers for improving crop quality, soil checkup, water system automation, weather forecasting, etc., but those technologies are not readily accessible to farmers.[12] For instance, considering soil checkup and profiling a farmer need to travel to agriculture centers located in nearby cities. Some farmers tend to use these facility centers but majority of the farmers does not have any idea about these centers or they just ignore and process with the traditional way of doing farming.

To make all the technologies available for everyone, one has to come up with an Internet of Things (IoT) device which combines all the available technologies such as soil checkup, weather forecasting, water system automation and thief protection. The plan is to implement 4 to 5 devices in one crop field for better data capture and give better results[11].

Design of the IoT micro-controller and device connections is shown in Fig. 1 which uses TC1047/TC1047A microchip which is a low power drive micro-controller with proven performance and quick response to the signal inputs.

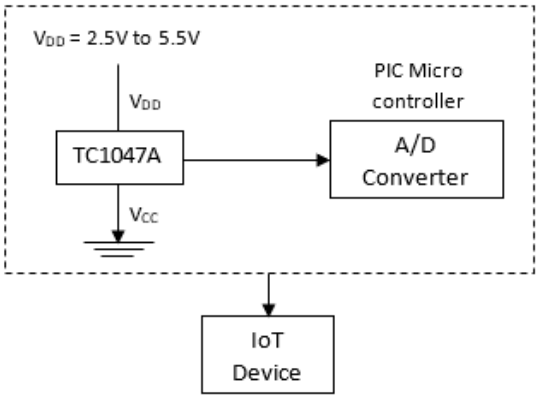

Fig.1. Block diagram of a TC1047/TC1047A microchip connection to an IoT device

The device is also implemented with Humidity and Temperature Sensor which will keep track of the humidity in the wind and surrounding temperature in real time. The sensors like Microchip's TC1047 and TC1047A are linear voltage output temperature sensors in which output voltage is directly proportional to the measured temperature. The same will be updated to farmer mobile device to make the farmer aware of. These micro-controllers are usually having a considerably low voltage drive input, thus even solar energy or any other non-conventional energy source can also be utilized for this purpose

A. Soil conditions and Properties sensors

The soil condition and property are the major factors which helps decides the crops that can be cultivated in the field. But there are very few resources available for the farmer to check their soil conditions. Although Indian government also has mobile messaging service and customer support centers for agriculture queries, the soil condition is left untouched due to issues related to distance supports. The IoT device implement the sensors needed to determine the major nutrient of the soil like nitrogen, phosphorus, and potassium. Decagon 5TE Soil sensor [5] can be used for detecting the soil properties. The captured data from multiple devices in the field may be analyzed and displayed on the farmer's mobile device. The data analyzed will also help the farmer to make a decision of which crop is best suited for the field for cultivation and also the fertilizer required to be used for. With a large number of device implemented the data from one place of soil can be used to predict the behavior of other crop fields, e.g., if the soil condition and properties of Area-l match the Area-2 soil condition and properties, the data analyzed can be used for Area-2 also.

A. Weather Forecast

The IoT device will make an Application Program Interface (API) call with latitude and longitude of the particular field over the internet to get the best weather forecast for the particular position. An alert for the same will be displayed on the farmer mobile device with suitable precaution measure to be taken[9].

B. Weather Forecast

The IoT device will have the feature to communicate between one fields to other field also. For instance, if there is a heavy wind in Area-1 which is 4 Km from Area-2, then the Area-1 device can raise an alert signal to Area-2 devices for the farmer to take early preventive actions. All the data captured from various devices will be stored in the centralized server so that all the data for different soil conditions can be analyzed centrally. This will help in forecasting soil behavior during the different seasons of the year. This will also help with suggesting the best crop for a season for soil of particular field, and will also help with sending an alert message to farmer's mobile device. Centralized server will also help the government to look into analyzed data and propose the proper policy for different areas and climatic conditions for the benefits of farmers.

C. Theft and Animal Grazing Protection

In India, there is always a problem with theft and animal grazing of crops, especially at night time. The IoT Device is implemented along with motion detectors (i.e., motion sensors) which detect animal or human presence around the fields. If any presence of animal or human is detected the device will raise an alert signal on farmer mobile to take an early preventive action10.

D. Visual & Voice Message Alert System

In India, in many States and sectors we have problem of illiteracy of farmers who cannot read or write. To help answer this issue, the mobile app will be implemented with visual and voice messaging alerts. The voice messages will be in regional language of the farmer. There will be an option to select specific language during installation of the device or even afterward.

E. Energy Management System (EMS)

The IoT device will be implemented with efficient energy management system to power various components of the device. The energy source consists of battery as well as the solar panel. This is also clarified while discussing Fig. 1 above.

IV. DATA POINTS

The various data points are important factors for the correct working of the device. We consider following data points:

• IoT device: There will be different IoT devices (sensors) with a unique identification number (UID) placed at particular latitude and longitude (or, the place demarked for such installations). The given data by each device will be synchronized in real time with a centralized server using TCP/IP protocol. The device will have major data collection points which will give the parameters like soil condition, water level, temperature, wind humidity. The IoT device will have a provision to detect and record the nearby IoT device identification number containing some data value, which would be then averaged in order to alert the surrounding areas with a manipulated result thereby acting as a conditioned forecasting device.

• Government Agro Portals: India government has a support system for farmer. The data can be collected from the support system and analyzed. The data can also be used to forecast using various control algorithms like Adaptive Neural Networks (ANN) of Artificial Intelligence (AI) techniques.

• Farmers: A farmer himself can be the best data point as he can feel everything in the real world. The mobile app will have quick questions and answer which farmer can easily select and the data can be submitted to a centralized server for analysis. This mechanism is a manual process but sufficiently effective as the farmer has years of experience along with mostly accurate heuristic estimations.

V. PROPOSED MODEL

The proposed model of the complete system can be seen in Fig. 2. The model consists of several individual blocks with specific function. The system is composed of IoT device which is protected with a firewall for connecting to the application server. A web server will be a medium for collecting all the external data points which will be processed by Analytic and State services. The core engine will be running to support web server for all the logical implementation. An Application server which will act as a processing unit for all the views like a mobile device, web view, and all external third-party interface. All the collected data after processing will be stored in the database in the cloud. This virtual application server will be duplicated for different regions for making the server availability for all the IoT devices. A central cloud server such as Amazon Cloud Server will be mentioned virtually, which will be connected to local cloud server (amazon cloud server with server location configured in the nearby IoT implemented farms). Transmission Control Protocol/Internet Protocol (TCP/IP) protocol will be used to communicate between device and the server. General Packet Radio Service (GPRS) or Local Area Network (LAN) technology will be used as connectivity medium. A local volunteer team will be assigned and given training for maintaining device and checking the system time to time.

A. Hardware Implementation

1. Sensor Nodes: Decagon 5TE Soil sensor [5] is available for getting the soil data. The high sensitivity capacitive humidity sensor is developed by Micro-Electro-Mechanical Systems (MEMS) technology [9] and also by Infrared based motion sensing system [10].

2. Raspberry Pi as Hardware for the operating system. OS like Linux or MS windows can be easily deployed to Raspberry Pi and can be used for high computation. Network devices, sensors can be easily added to Raspberry Pi socket to make the sensors functional with very low power requirement.

3. Solar Plate& Chargeable Battery: As the device will be placed in open field eco- friendly energy system like solar plates will be connected to device with efficient chargeable battery to keep the device running 24 hours

B. Technology Stack

The complete architectural design of a proposed system shown in Fig. 2. The stack implement different data points like IoT Device event logs, user inputs, past analyzed data and other nearby IoT device. The programming language that is being proposed is to use Python which is widely used and scalable programming language for any big system. The Platform will be managed by Analytic engine and cache management system to distribute the load. The top section of the stack describes the possible use cases for the above described system.

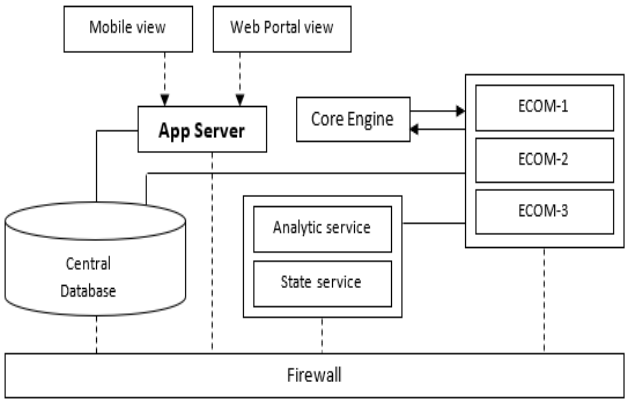

Fig. 2. The complete architectural design of a proposed system showing major components integrated in a system

Technology and uses of the stack can be explained as below:

Data Source: Data sources comprise of all the inputs to the IoT device which can be first recorded, then collected for the system in order to perform particular task. Data source can also contain data provided by the farmers using mobile device operation and also the historical data collected from government sources as discussed earlier.

Processing Unit: Data collected in the data source will now be processed and analyzed in the processing unit. The processing unit consists of components like Analytic engine powered by Apache Spark and R programing language for big data processing. Python as the programming language is used for interfacing different component and algorithm implementation. Cache management system is also implemented in the processing unit to make the 100% availability of the system. Business logic will be maintained as separate layer to be available for all the processing unit and analytic system. Data access layer provide access to processed data.

This layer will be having REST API interface, which support any third-party system to be integrated with the proposed system.

Core Functionality: The core functionality which we are planning to implement are; soil properties check, weather forecasting, automatic water level optimization, Real time impact management like wind speed monitoring, rain forecasting with the use of nearby data collected from different IoT device in the adjacent locations, visual and voice alerts, which make the proposed system unique. The different parameters identification, detection and alarming of the farmers before the disaster, are some of the special features of the device and mechanism been implemented. As a preliminary stage of our work, the alerts will be supported in English and Hindi language, but the architecture of application will designed such that it can support any regional language for alerts in future.

User Cases: This section of technologies stack defines the possible user cases of the proposed system. This paper proposes the user cases like improving productivity of Indian farmer by analyzing and suggesting the best crop of the season, fertilizers required with different useful alerts and many more qualitative suggestions as a support. The system when implemented can provide a centralized database of soil properties at different latitude and longitude, which can be very useful for policy making in the field of agriculture under the Government of India Improving the productivity and providing farmer useful alters in turns improve the farmer life reducing number of farmer suicide cases in India.

A. Wireframe Interface Structuring

The wireframe will describe the basic proposed model mobile screen for farmers. The mobile application will have a proper login screen to identify the users (farmers). Once the user logged in he/she can see all the devices owned by him/her.[13] The device which require attention will be shown in red colour or the colour users find it easy to understand the meaning of. On clicking the device, the farmer will have different options to interact with the IoT device or view the status of current field. Visual alerts can be present to user's screen for the particular device. The screen will also show how the user can select various suggestions available for the respected alerts. A navigation menu will be available to navigate through each section.

VI. RESULTS

Table. I. shows distinct parameters used as a data sample collected from an IoT device which records, collect and further sends the collected data to the server for processing. The processed data is analyzed and used to generate suitable alarms on the farmer mobile device.

Table. I. IoT collected data sample types

Sl. No.	Parameters	Measurement performed
1	Soil properties	▪ pH ▪ Salinity ▪ Cation exchange capacity (CEC) ▪ Organic matter ▪ C:N ratio (Carbon to Nitrogen)
2	Humidity (%)	Percentage of water content in soil at different point of time.
3	Temperature (^{0}C)	Environmental temperature – favourable to the crop.
4	Natural calamities (F= Flood, and E=Earthquake)	Information concerning flood or earthquake to alert.

VII. CONCLUSION

Agriculture is an important part of Indian economy. The IoT smart device, as described and discussed in the paper, will play a vital role in improving farmer's life as well as increases the crop production efficiency to its optimal margin. Educating farmers with visual alerts will help them to make better and efficient and individual decisions in a given moment of time. Different devices connected with each other help in evaluating the better data points and analysis which will help Indian government to make better policies for farmers.

Indian farmers are still unfamiliar with the properties a soil possesses and the best crop that can be grown in the respective fields. This IoT device will help them to easily know each detail of their soil, water level and fertilizer required for the field, thereby, providing sufficient knowledge as required for them to improve the yields. Weather forecasting and theft protection with visual alerts in their own language is an added advantage of the proposed system.

Further, our aim is to develop an actual implementation of the product on a particular agricultural land to find the practical implementation as well as the practical hurdles yet to be encountered.

REFERENCES

1. J. Ma, X. Zhou, S. Li, Z. Li, "Connecting Agriculture to the Internet of Things through Sensor Networks", Internet of Things (iThings/CPSCom) 2011 Int'l Conference on Cyber Physical and Social Computing, pp. 184-187, 2011
2. H. Channe, "Multidisciplinary Model for Smart Agriculture using InternetofThings (IoT) Sensors Cloud-Computing Mobile-Computing &Big-Data Analysis. Mukesh Kothari Dipali Kadam Assistant Professors", Department of CE PICT Pune India. Int. J Computer Technology & Applications, vol. 6, 2015
3. G.V. Satyanarayana, S.D. Mazaruddin, "2013. Wireless Sensor Based Remote Monitoring System for Agriculture Using ZigBee and GPS", InConference on Advances in Communication and Control Systems, pp. 110-114.
4. Snehal S. Dahikar, Sandeep V. Rode, "Agricultural Crop Yield Prediction Using Artificial Neural Network Approach", Int'l Journal Of Innovative Research In Electrical Electronics Instrumentation And Control Engineering, vol. 2, no. 1, January 2014.
5. A. Paventhan, S. Krishna, H. Krishna, R. Kesavan, N.M. Ram, "WSN monitoring for agriculture: comparing SNMP and emerging CoAP approaches", India Educators' Conference (TIIEC) 2013 Texas Instruments, pp. 353-358, 2013, April
6. N. Dlodlo, J. Kalezhi, "The internet of things in agriculture for sustainable rural development", Emerging Trends in Networks and Computer Communications (ETNCC) 2015 International Conference on, pp. 13-18, 2015.
7. M. Ryu, J. Yun, T. Miao, I. Y. Ahn, S. C. Choi, I. Kim, "Design and implementation of a connected farm for smart farming system", SENSORS 2015 IEEE Busan, pp. 1-4, 2015.
8. T. Wark, P. Corke, P. Sikka, L. Klingbeil, Y. Guo, C. Crossman, P. Valencia, D. Swain, G. Bishop-Hurley, "Transforming agriculture through pervasive wireless sensor networks", Pervasive Computing IEEE, vol. 6, no. 2, pp. 50-57, Apr. 2007

9. I. H. Kim, S. M. Hong, I. S. Lee, B. M. Moon, K. Kim, "High sensitivity capacitive humidity sensor with a novel polyimide design fabricated by MEMS technology", 4th IEEE Int'l Conference on Nano/Micro Engineered and Molecular Systems, pp. 703-706, 2009.
10. G. Feng, Y. Yang, X. Guo, G. Wang, "Optimal design of infrared motion sensing system using divide-and-conquer based genetic algorithm", 2013 IEEE International Conference on Mechatronics and Automation, pp. 482-487, 2013.
11. Y.Mohana Roopa et al ," Component-based Self-adaptive Middleware Architecture for Networked
VIII. Embedded Systems", International Journal of Applied Engineering Research, pp. 3029-3034,2017.
12. Y.Mohana Roopa et al," Context-Aware Computing and Big Data Analytics for IoT Applications" IEEE International Conference on Intelligent Computing and Control Systems ,pp. 872-876,2018
13. Y.Mohana Roopa et.al ,"Middleware Architecture for the Internet of Things"JRDCS,,vol 10,pp 1-6,2018.

AUTHORS PROFILE

Dr. Y Mohana Roopa, is currently working as Professor of CSE , Institute of Aeronautical Engineering, Hyderabad. She received her Ph.D at JNTU, Anantapur. She has published 15 papers in various national and international conferences and 25 papers in various international journals. Her areas of interest include Software Engineering, Software Architecture, data mining, cloud computing, Internet of Things

Ms. Ashoka Deepthi, is currently working as Assistant Professor of CSE, Institute of Aeronautical Engineering, Hyderabad.She Received her M.Tech from JNTUH. Her area of interest includes cloud computing, Internet of Things.

Ms. Novy Jacob, is currently working as Assistant Professor of IT, Malla Reddry College of Engineering and Technology,Hyderabad. She Received her M.Tech from JNTUH. Her area of interest includes cloud computing, Internet of Things.