International Journal of Engineering and Advanced Technology (IJEAT)
ISSN: 2249-8958 (Online), Volume-9 Issue-2, December, 2019

Microcontroller Based Bi-Directional DC-DC Converter for Automobile Application

K. Vidya, P. Annapoorani, S. Akila, M. Vijayalakshmi

Abstract: ***This paper presents different topology for non isolating bi-directional dc–dc converter for automotive application. To increase and decrease the voltage level Buck-boost bidirectional converter type is used. This type of converter reduces the switching losses by using less number of switches. Also regenerative concept was introduced. During braking operation the energy stored in the motor was reduced by buck operation of the bidirectional converter and stored into the battery. This Battery will also act as the supply voltage when required. An auxiliary energy storage battery stores the regenerated energy which is obtained during the process of braking and it fed back to the electric machine in the electric vehicle applications. Auxiliary battery provides the power to the bidirectional dc-dc converter to boost the high-voltage bus during vehicle starting. To achieve power transfer between two dc power sources in either direction, the bidirectional dc-dc converters are used since it has the ability to reverse the direction of the current flow and power. This can also be used in multi port systems. In Multi-Port HEVs, two or more voltage source purposes of better performances of the vehicle are used.***

Keywords: ***dc–dc converter, Buck-boost bidirectional converter, Auxiliary battery, Multi-Port HEVs.***

I. INTRODUCTION

In PV systems, EVs and HEVs we use single input system to store the battery. The hybrid source is proposed to increase the reliability of the system. The bidirectional converter topology is also proposed as a simplified model with reduced number of switches. Due to which the switching losses can be reduced. The proposed method is used especially for the low power application like electric bike and electric cars. In this the back emf during regenerative braking is stored back to the battery and again fed to the motor when it is required. This hybrid battery storage system can also be implemented in any multiport systems, renewable energy systems and heavy electric vehicles.

Revised Manuscript Received on December 30, 2019.
* Correspondence Author
Vidya.K,, AP**,** EEE, Vel Tech Multi Tech Dr.Rangarajan Dr.Sakunthala Engineering College, Chennai, TN,India
Annapoorani.P, AP, EEE, Vel Tech Multi Tech Dr.Rangarajan Dr.Sakunthala Engineering College,Chennai, TN, India
Akila.S, AP, EEE, Vel Tech Multi Tech Dr.Rangarajan Dr.Sakunthala Engineering College,Chennai, TN, India
Vijayalakshmi.M, AP, EEE, Vel Tech Multi Tech Dr.Rangarajan Dr.Sakunthala Engineering College, Chennai, TN, India

II. EXISTING SYSTEM

In the existing system, the single phase full bridge isolated bidirectional dc-dc converter is used for high power density power conversion systems. The phase shift modulation is used to achieve high power transfer capability in the converter. Magnetic flux saturation exists in the transformer due to the DC bias current, a high current pulse is observed in the ac current. The efficiency is reduced due to the additional stress in the switching device. However to avoid the magnetic flux saturation in the transformer parallel connection of capacitors are used. Thus parallel connection of capacitors may increase the weight, cost and also decrease the reliability. Furthermore, in the existing system the regenerative concept is not implemented is achieved by the phase shift modulation.

III. PROPOSED SYSTEM

The transformer used in the existing system produce magnetic flux saturation, this causes current stress in the switching devices and reduce the efficiency. In our proposed system, instead of using transformer, only four MOSFET switches are used. So that we can eliminate the current stress and increase the efficiency of the converter. The parallel connection of multiple capacitors in the existing system can increase the weight, cost and decrease the reliability. The bidirectional converter used in this system not only transfers the energy to battery but also to control the energy recovery. Additionally, hybrid system is used, so we can use both battery and dc input as a source. Further, regenerative concept is adopted to store the energy back produced at the time of braking.Battery and photo voltaic cell is used as the hybrid source. Instead of photo voltaic cell dc source is used to reduce the cost. The optimal selector which consists of relay will choose which source is in operation whether the dc source or battery. The output of the optimal selector is given to the bidirectional converter. The bidirectional converter can either act as boost or buck mode depending upon motor operation.During motoring mode the converter will acts as the boost converter. So the converter will boost the voltage upto 12 volt and given to the dc motor. During braking mode, buck operation takes place. Such that back emf produced during braking condition, will buck and store back into the battery. This is also called as regenerative braking. The Battery will also used as the source voltage. The MOSFET switch is turn on by the gate driver. The gate driver will drive the MOSFET in efficient way. The microcontroller controls overall operation of the circuit. The input and output voltage of the converter is detected by voltage signal condition and given to the microcontroller.

Fixed RPS voltage is given to the microcontroller and voltage signal conditioning. And dual RPS voltage is given to the gate driver. Throttle control is used to vary the speed of the motor. The input and output voltage is viewed by the LCD.

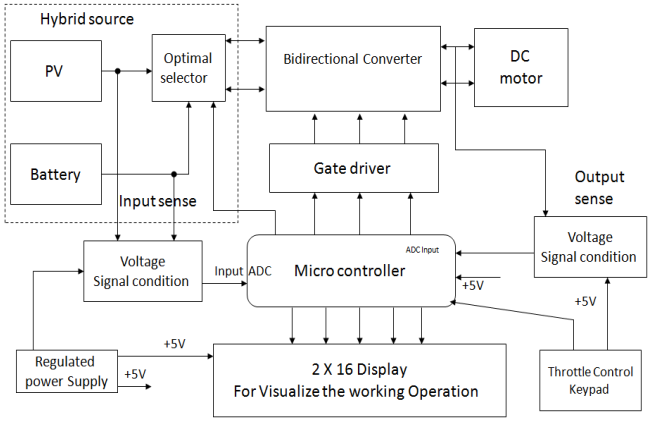

Fig.1.Block diagram of proposed system

IV. MATLAB/SIMULATION MODEL

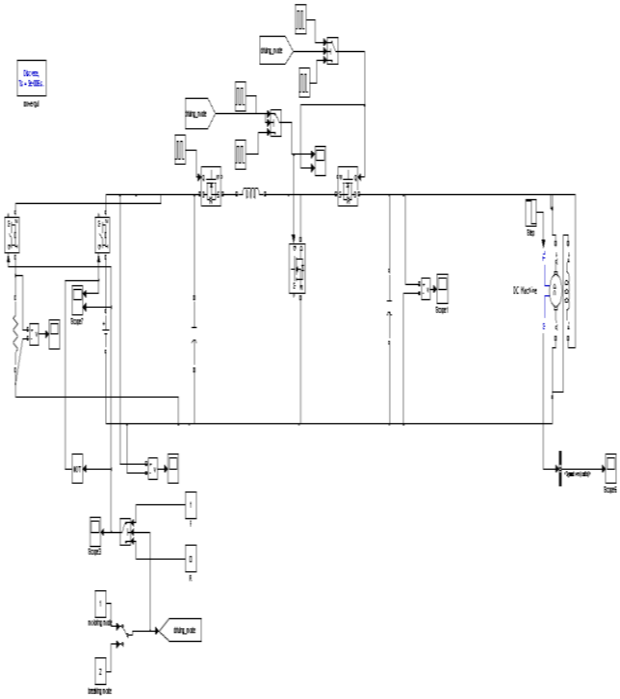

Fig.2. Simulation Model

V. RESULTS AND DISCUSSION

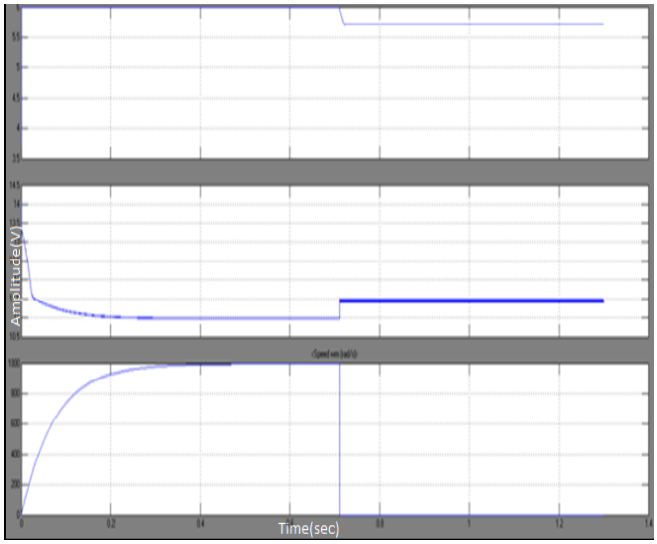

Fig.3. Simulation result of bidirectional converter

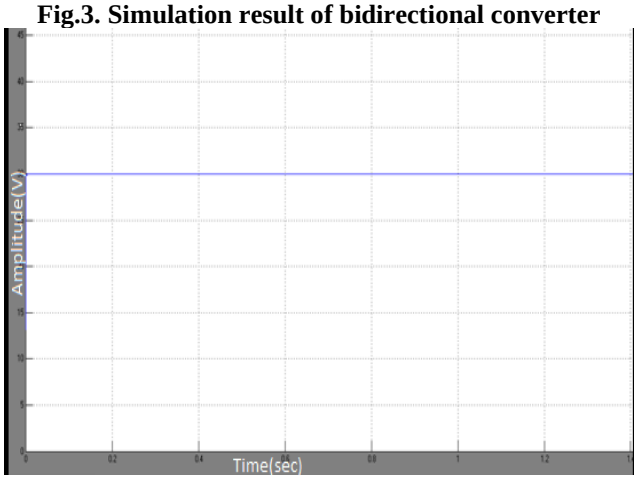

Fig.4. Simulation result of motoring mode

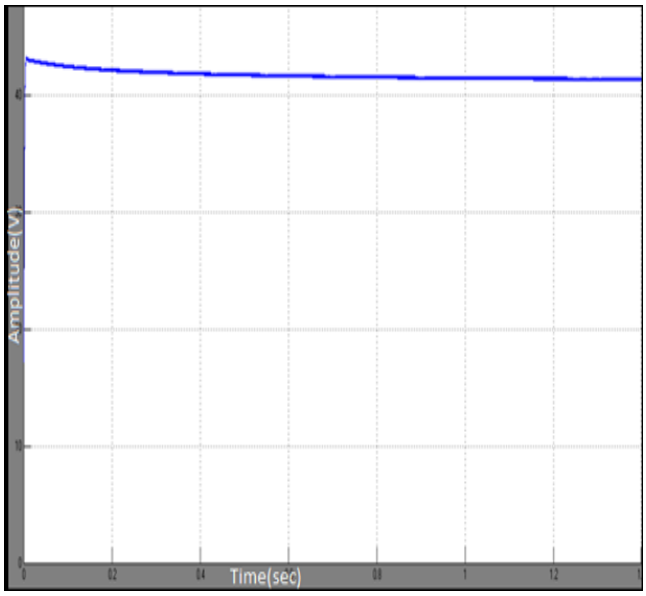

Fig.5. Simulation output voltage of boost converter

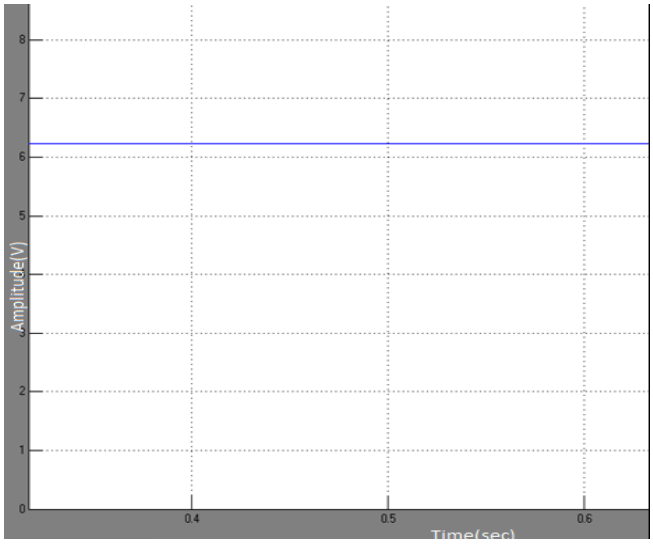

Fig.6. Simulation result of buck converter

VI. CONCLUSION

Thus different topology for non isolating bi-directional dc–dc converter for automotive application is proposed. Instead of using battery we can use the Ultra capacitor for storage purpose and low number of switches are used. It greatly reduces the switching losses.

REFERENCES

1. S. C. Smith, P. K. Sen, and B. Kroposki, "Advancement of energy storage devices and applications in electrical power system," in Proc. IEEE Power Energy Soc. General Meeting, Jul. 2008, pp. 1–8.
2. S. Inoue and H. Akagi, "A bidirectional dc-dc converter for an energy storage system with galvanic isolation," IEEE Trans. Power Electron., vol. 22, no. 6, pp. 2299–2306, Nov. 2007.
3. J.Walter andW.W. De Doncker, "High-power galvanically isolated dc-dc converter topology for future automobiles," in Proc. IEEE Power Electron.Spec. Conf. (PESC), Jun. 2003, vol. 1, pp. 27–32.
4. S. Mohanram, R. Chandralekha, "Analysis of SFCL's in DC System with Renewable Energy Sources", International Journal of Engineering and Technology., Vol. 7, no 7, pp 2084-2091, Dec 2015-Jan 2016

AUTHORS PROFILE

Ms.Vidya. K obtained Bachelor's degree in Electrical and Masters in Applied Electronics. The area of interest includes Drives, Measurements. Contributed many number of active publications in reputed journals.

Ms.Annapoorani. P obtained Bachelor's degree in Electrical and Masters in Process Control and Automation. The area of interest includes Control Instrumentation, Measurements. Contributed many number of active publications in reputed journals.

Ms.Akila. S, completed Bachelors and Master's degree under Electrical Engineering. Area of interest includes Power Electronics, Control Engineering. Published more than 7 papers in Scopus indexed journal.

Ms.Vijayalakshmi. M, completed Bachelors and Master's degree under Electrical Engineering. Area of interest includes Power Electronics, Control Engineering. Contributed many number of active publications in reputed journals.