PID Controller With Fuzzy Inference System As Simple Feedback For Closed Loop Control Of Intravenous Anesthesia

Kalyani Bhole

Abstract: ***Anesthesia is an imperative activity during operation. Anesthesiologist perceives patient's physiology and adjusts the drug rate. Sometimes, it may go overdose or under-dose which is proscribed. This process is merely in need of an expertise which in turn, may not be available every time and everywhere. But we can store this expertise with the help of fuzzy inference system and utilize it to judge the depth of anesthesia. A genuine effort has been made to design a PID controller with fuzzy inference system as simple feedback to control intravenous anesthetic drug delivery. This paper demonstratesthe design and implementation of experts' based system with PID controller and comparison of the same with open loop target controlled infusion and fuzzy inference system without a controller. The conclusion of this study is that the PID controller with fuzzy inference system as simple feedback gives fast response with no overshoot. Ultimate prototype is implemented on Xilinx's Spartan 3E Field Programmable Gate Array.***

Keywords: Type 1 Fuzzy Inference System, PID controller, Intravenous Anesthesia, Field Programmable Gate Arrays, Mean Arterial Pressure, Heart Rate, Oxygen Saturation;

I. INTRODUCTION

Uncertainty lies within complex and highly non-linear processes which are controlled by skilled human operators. Modeling of such complex processes is a great challenge. For such applications, we can achieve certain accuracy by accepting some level of uncertainty using Fuzzy logic.

Conventional Proportional Integral Derivative (PID) controller is well developed and applied for more than fifty years to different fields. PID controller is characterized by effectiveness for linear systems, low cost, low maintenance, and plainness of operation with ease of design. However, conventional PID controllers fail to work for nonlinear systems and higher order systems. Anesthetic drug metabolism is highly complex and non-linear process. Pharmacokinetics and pharmacodynamics can model the drug distribution, metabolism and its effect which is dynamic with respect to the subject. However, this leads towards a higher order system, inhibiting the application of conventional PID controller. Whereas, ability of a fuzzy inference system (FIS) to store experts' knowledge base and advantages of PID controller, can work collectively to structure more reliable control for intravenous anesthesia.

In this development, the first study aimed at automatic control of anesthesia was made in 1950's by Bickford, Kiersey et al. and Solteroet.al. [18]. The investigators used the apparent relationship between the depth of anesthesia and the changes in the EEG to control the delivery of intravenous thiopental or to inject liquid ether into an anesthetic circuit. This designed device when tested in animals, the device was capable of keeping an animal anesthetized for several days without adjustment. This device was also tested on 20 patients undergoing surgery of approximately 1.5h duration. Similar systems were developed by Bellville and co-workers [18].For 20 years after this initial automated delivery system no further developments were reported. Probable reasons for the lack of further work in that period included the recognition that the EEG is not always a reliable indicator of anesthetic depth.

A new closed loop anesthetic control system was described by Suppan in the 1970's. Suppan designed a controller or halothane using blood pressure, heart rate or tidal volume as inputs to the controller [18]. Suppan found that he could control halothane delivery using heart rate as controlled variable in normotensive, but not hyper/hypotensive patients. Blood pressure was successful even for patients with hyper/hypotension. However the controller caused problems for some patients requiring changes in the set limit, especially in cases of significant intraoperative blood loss.McNally et al. designed a feedback controller for the delivery of nitroprusside to patients[18]. This system used a proportional derivative controller implemented on an analog computer. The controller was successfully tested in animals and surgical patients.A fuzzy logic controller is designed by R. Meier and his colleagues to control depth of anesthesia with MAP as controlled variable [19].Tuning of membership functions and linguistic rules is done by trial and error. The fuzzy rules consist of error between desired and actual value of Mean Arterial Pressure as well as integral of the error. The designed fuzzy logic controller was tested during 11 surgical operations and authors concluded thatfuzzy controller was proved to be superior over an ordinary human controller.

Hector Reboso Morales and team from Spain published their work in "Model identification and closed loop control strategies for propofol anesthesia using the Bispectral Index(BIS)" [20]. They developed a closed loop control strategy using Bispectral index as the control variable. A system identification was performed and validated by a study on 10 patients. The conclusion of their work is that as the model appears to be time variable, a time-variable auto tuning controller consequences to be the optimal controller approach.Khaled Ejaz and Jiann-shiou Yang, together work on "Controlling depth of anesthesia using PID tuning: A comparative Model-Based Study" in 2004 [21]. Three different pharmacokinetic models are used with a discrete PID controller and compared to test effectiveness of PID controller in different patient conditions.AtiehBamdadian

Revised Manuscript Received on October 05, 2019

***** Correspondence Author

Kalyani Bhole*, Department of Instrumentation and Control, College of Engineering Pune, Pune, India.

and et.al published their research titled "Generalized Predictive Control of depth of anesthesia by using a pharmacokinetic-pharmacodynamic model of the patient" [24]. They concluded that generalized predictive control with or without noise and disturbances was much better than PID controller. They have used BIS (Bispectral Index) for evaluation of depth of anesthesia.

Kristian Soltesz and associates published their research in IEEE international conference on decision and control and European control conference, during December 12-15, 2011, on "individualized PID control of depth of anesthesia based on patient model identification during the induction phase of anesthesia" [25]. The closed loop performance can be significantly improved by employing the individual controller based on Proportional Derivative model identified during induction phase response.Saba Rezvavian and friends, "Controlling the depth of anesthesia using model predictive controller and extended Kalman filter" [26]. MPC controller is much more robust than PID controller.

In this sequel, PID controller with fuzzy inference system as simple feedback is designed and implemented for closed loop control of intravenous anesthetic drug delivery. Block diagram of the proposed system is as shown in fig 1. An infusion pump delivers the anesthetic drug to patients. Change in drug concentration in body fluids reflects in terms of physiological parameters such as change in Mean Arterial Pressure (MAP). Different physiological parameters such as Heart Rate (HR), MAP and Oxygen Saturation (OXSAT) can act as measurand for depth of anesthesia (DOA). This measured DOA is compared with set point (Reference DOA) and calculated error is fed to PID controller, which determines the control action and control actuator i.e. motor of infusion pump to control the drug rate.

Completed work is explained in three fragments of paper. Section I explains the fuzzy inference system to judge the depth of anesthesia. Section II represents the PID controller. Section III details hardware implementation of system followed by results in section IV. Conclusion is conferred in section V.

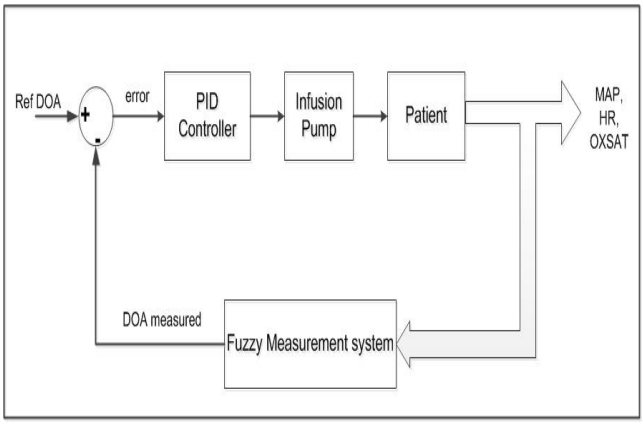

Fig 1 Block diagram of proposed system

II. FUZZY INFERENCE SYSTEM

A. Fuzzy Theory

In real world, many times we are not able to come to decision whether something is "True" or "False" which is lies partially between "True" and "False". Boolean computing is based on either "True" or "False", whereas fuzzy logic computing is based on "degree of truth" which lies between 0 and 1. This representation allows researcher to map uncertainty for an event. General block diagram of fuzzy logic-based system is as shown in fig 2. Main blocks of general fuzzy logic-based system are fuzzification, inference mechanism, rule base and defuzzification.Fuzzification is the process of conversion of crisp input into fuzzy number. This conversion is done with the help of mathematical representation of partial truth. This representation is called as membership function. Membership functions have different shapes and depend on linguistic representation (e.g. when we say, antecedent is LOW, the plausibility of antecedent at typical condition will be highest which is considered as 1 whereas it decreases with up gradation or degradation of the antecedent). Membership functions are calculated for all linguistic variables. Next component of FLS is rule base which is nothing but set of "If-then" rules of decision making. Fuzzy Inference Mechanism uses fuzzy rules for calculated antecedents' membership value and computes fuzzified output. This fuzzified output is converted into crisp value by defuzzification.The most popular and accurate defuzzification method is calculation of center of mass or center of gravity (CG).

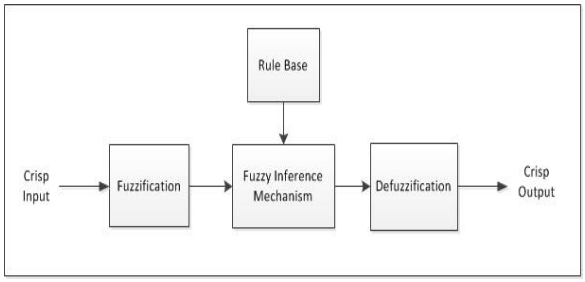

Fig 2Block diagram of Fuzzy Inference System

In Operation Theater, anesthesiologist plays an important role in maintaining anesthetic depth at the appropriate level. He/she judges the anesthetic depth watching over different physiological parameters such as heart rate, mean arterial pressure, skin color, stimulus response, etc. Based on the observation, he/she adjusts the drug rate. Bispectral Index gives a direct measurement of depth of anesthesia but BIS monitor has high cost hurdle for its extensive use. Therefore, Mean Arterial Pressure, Heart Rate and Oxygen Saturation are considered as the antecedent of Fuzzy Inference System.The consequence is, of course, Depth of Anesthesia. Expert based linguistic representation with ranges of antecedent and consequence is collected from 10 different experts. Averaging of these articulates experts' knowledgebase as shown in table 1. Subsequent task is to formulate a rule base. Zadeh-Mamdani if-then rule format is followed. Experts' power of decision making is encapsulated in the form of rules. Table 2 shows the complete rule base.

Table 1: Experts' knowledgebase

Linguistic Representation / Parameter	LOW			MEDIUM			HIGH		
MAP	40	50	55	50	60	68	65	90	105
OXSAT	80	82	86	86	88	92	90	94	100
HR	50	70	90	72	90	110	96	106	130
DOA (0-100)	LOW (Anesthetize)			MEDIUM (Asleep)			HIGH (Awake)		
	0	35	50	40	55	70	65	80	100

Table 2: Rule base representation

OXSAT / MAP	LOW	MEDIUM	HIGH	HR
LOW	LOW	LOW	LOW	LOW
	MEDIUM	MEDIUM	LOW	MEDIUM
	LOW	LOW	HIGH	HIGH
MEDIUM	LOW	LOW	LOW	LOW
	MEDIUM	MEDIUM	MEDIUM	MEDIUM
	MEDIUM	LOW	HIGH	HIGH
HIGH	MEDIUM	MEDIUM	LOW	LOW
	MEDIUM	HIGH	LOW	MEDIUM
	HIGH	HIGH	HIGH	HIGH

III. PID CONTROLLER

Within the industry, PID is utmostcommon feedback controller because of its robustness, simplicity and accuracy. It has been successfully used for over 50 years. PID controller is defined by the following equation:

$$u(t) = K_p * e(t) + K_i \int e(t)\,dt + K_d * \frac{de(t)}{dt} \quad (1)$$

Where

K_p: Proportional gain

K_i : Integral gain

K_d : Derivative gain

$e(t)$: Instantaneous error

For hardware implementation, this equation is converted into discrete form, as shown in equation 2.

$$U(z)(1-z^{-1}) = \left(K_p + K_i * \frac{T_s}{2} + \frac{K_d}{T_s}\right)E(z) + \left(-K_p + K_i * \frac{T_s}{2} - 2\frac{K_d}{T_s}\right)(z^{-1})E(z) + \frac{K_d}{T_s}E(z)(z^{-2})$$

$$u(k) = u(k-1) + a * e(k) + b * e(k-1) + c * e(k-2) \quad (3)$$

where

$$a = \left(K_p + K_i * \frac{T_s}{2} + \frac{K_d}{T_s}\right)$$

$$b = \left(-K_p + K_i * \frac{T_s}{2} - 2\frac{K_d}{T_s}\right)$$

$$c = \frac{K_d}{T_s}$$

A. Controller tuning

Controller tuning takes in the calculation of the optimum values of proportional gainK_p, integral gainK_i, and derivative gain K_d. Aim for tuning of PID algorithm is to match predetermined ideal response for the closed loop control. Ziegler Nichols method is adopted here for tuning of PID controller. Pharmacokinetic and pharmacodynamics model is used to simulate human body response to anesthetic drugs [1].

IV. HARDWARE IMPLEMENTATION

Selection of tool for hardware implementation is a great challenge for biomedical applications where quick and accurate response is expected. Parallel processing helps to optimize execution time. Therefore, Field Programmable Gate Arrays (FPGA) is the right platform for such applications. One more advantage of this platform is that we can generate an RTL design for a controller which can be transformed into a single chip. Challenge of accuracy is overcome by the use of floating pointimplementation. The architecture ofFPGA implementation is divided into two parts: 1) Fuzzy Inference System Architecture 2) PID controller architecture

A. Fuzzy Inference System Architecture

Fuzzy Inference System Architecture is as shown in figure 3. Xilinx's Spartan 3E FPGA is used for implementation. In this sequel, the first block is for fuzzification. Input for this block is antecedents of fuzzy logic system. This block is made up of adders, multipliers and comparators which computes membership value and an index to link membership value to linguistic term. For reduction of execution time, parallel computing is used for three fuzzifier units.

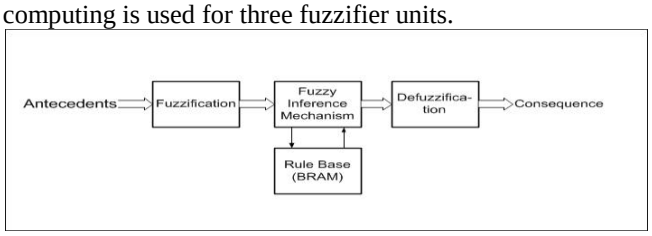

Fig 3 Proposed architecture for FPGA implementation

Fuzzy rules are stored in block RAM for easy and fast access. Consequence of each fuzzy rule is stored specific address which is nothing, but index generated in previous block. Forthcoming block is Fuzzy Inference Mechanism which

draws consequence of fuzzy rules from Block-RAM (BRAM) and computes final output when two or more than rules are fired. Zadeh-Mamdanifuzzy inference mechanism is used during this research. In this sequel, defuzzification is conversion of fuzzified output back to crisp one. This process involves, calculation of centroid of fuzzy area which ultimately involves, calculation of area under the curve and circumference. To make this computing simpler, fuzzy area is sampled for n points. Summation of product of output at sample n and membership value of n gives area under the curve, whereas summation of membership values gives circumference. Further centroid is calculated by taking ratio of area and circumference. But computing of ratio involves, division operation which is challenging for FPGA as it is digital device. Hence for division, fast and optimized method is used which is in the author's previous publication [1].

B. Digital PID controller architecture

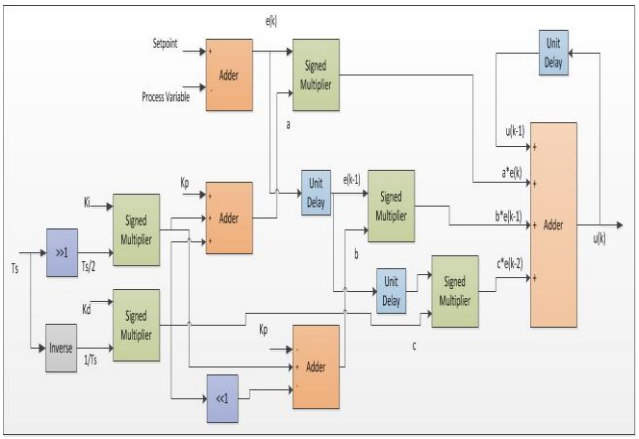

Fig 4 FPGA architecture for digital PID controller

FPGA architecture of digital PID controller is as shown in fig 4. Digital PID formalism is explained in section II. Equation 3 is used for FPGA implementation. The left shift operator is used for multiplication by 2 and right shift operator is used for division by 2. Five signed multipliers, eight two input adders, one right shift, one left shift and inverse unit constitute digital PID controller. Unit delays are programmed with clock tick operation. The uses of such kind of delays avoid unwanted infinite looping. The accumulator is used in this case to store the value till the next clock tick.

V. RESULTS

This section is organized into two parts, a) simulation results and b) hardware implementation results.

A. Simulation Results

The proposed design is simulated using Matlab. Total 270 data points are simulated using patient model and confirmed by experts. Out of 270, only three outcomes are rejected by experts, which later pilot towards modifying FIS. Pharmacokinetic-pharmacodynamic drug response model is used for simulation of the patient's response to anesthetic drug [9,15].

B. Open loop TCI

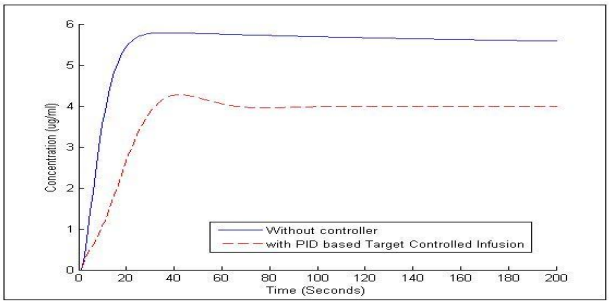

Fig 5 Open loop Target Controlled Infusion

Pharmacokinetics based drug model is used for simulation of the propofol dose response. Fig 5 shows PID based open loop response. If the anesthetic drug is administered manually, drug concentration reaches at 5.85ug/ml as shown by the blue line, whereas the expected range of propofol drug concentration for hypnosis cites between 4 to 6 ug / ml [16]. If the drug concentration calculated by patient model is used as a control variable and PID controller is applied to administer anesthetic drugs, concentration is maintained at 4ug/ml as shown by the red line. The total amount of drug delivered is also less in the latter case. Though it is advantageous than manual drug dosing, this method fails in situations such as blood loss during surgery which can be monitored and controlled by direct measurement.

C. Closed loop Fuzzy Inference and on-off controller

In this sequel, direct measurement of concentration is not feasible. Whereas different physiological parameters depict the drug concentration which is used as indicated by experts and FIS is designed. As mentioned earlier, target concentration considered during this research is 4ug/ml. The response of FIS with on-off controller is as shown in fig 6. Negative overshoot is seen in this response which is harmful. So it should be evaded.

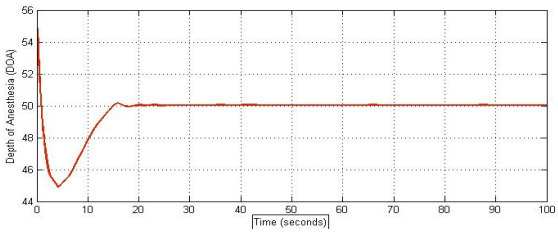

Fig 6 closed loop control with fuzzy inference system

D. Closed loop Fuzzy Inference and PID controller

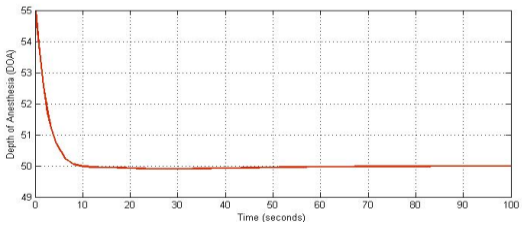

Fig 7 PID controller with Fuzzy inference system as a simple feedback

PID controller improves response overcoming negative peak as shown in fig 7.

Consequently, FIS as simple feedback and PID controller gives better response over manual control and FIS with on-off controller. FIS helps to reduce settling time to 10 seconds.

E. FPGA Implementation Results

Proposed PID controller with FIS as simple feedback is implemented using Xilinx's Spartan 3E FPGA. Resource utilization summery is as shown in table 3.As the design gets larger and faster, power consumption goes up. Power consumption is dependent on design and is affected by design density, output loading, logic block and interconnect structure etc. Calculated total supply power at design phase using Xpower analyzer is 0.162W at 25°C.

Table 3 Resource utilization

Logic utilization	Used	Available	% utilization
Number of slices	2743	4656	59
Number of slice Flip Flops	1176	9312	13
Number of 4 input LUTs	5118	9312	55
Number of bonded IOBs	17	232	7
Number of MULT 18X18	20	20	100
Number of GCLKs	8	24	33

VI. CONCLUSION

Intravenous anesthesia has substantial growth, but geriatric anesthesia still hasscope for improvement. Mortality because of anesthesia is not the problem forthe adult population, but morbidity can be overcome by precise and exact control ofadministration. PID controller's precise control ability combined with expert's knowledge base fuzzy inference system has given rise to fast and robust control strategy. Use of hybrid control such as model predictive control with fuzzy inference system will improve controller performance which can be prospect extent of this work.

ACKNOWLEDGEMENT

The authors are also grateful to the administration ofSanchetihospital, Armed Forces Medical College Pune,Mangeshkar hospital and Ruby Hall Research Clinic, Pune for their assistanceduring the course of the study.

REFERENCES

1. K. Bhole, S. Agashe and et.al, FPGA implementation of type 1 fuzzy inference system for intravenous anesthesia", Fuzzy systems (FUZZ), 2013 IEEE international Conference on, IEEE, 2013.
2. K. A. Bhole, S. D. Agashe, and et.al, "FPGA implementation of Type 1 Fuzzy Inference System for Intravenous Anesthetic drug delivery", World conference on soft computing, 2011.
3. H. A. Elreesh and B. Hamed, "FPGA fuzzy controller design for magnetic ball levitation," International Journal of Intelligent Systems and Applications (IJISA), vol. 4, no. 10, p. 72, 2012.
4. J.Y. Lan and et.al, "Review: intelligent modeling and control in anesthesia," in Journal of Medical and Biological Engineering, vol. 32, pp. 293–308, 2012.
5. Z. Runjing, X. Hongwei, and W. Zhijun, "Design of fuzzy temperature control system based on FPGA," in Control, Automation and Systems Engineering (CASE), 2011 International Conference on. IEEE, 2011, pp. 1–4.
6. J. Nio, S. Sambade, C. Ionescu and R. De Keyser, "Advances in drug dosing predictive control during anesthesia," Belgian Day on Biomedical Engineering, pp. 3–4, 2007.
7. V. Esmaeili , A. Assareh , M. B. Shamsollahi , M. H. Moradi and N. M. Arefian, "Designing a fuzzy rule based system to estimate depth of anesthesia," IEEE Symposium on Computational Intelligence and Data Mining 2007, pp. 681–687, 2007.
8. R. D. Miller, Miller's Anesthesia, 6th ed., e. Lee A Fleisher, Ed. Elsevier, 2005.
9. J. R. Jacobs and E. A. Williams, "Algorithm to control compartment drug concentrations in pharmacokinetic model-driven drug delivery," IEEE Transaction on Biomedical Engineering, vol. 40, no. 10, pp. 681{687, October 1993.
10. Schnider and et.al, "The influence of method of administration and covariates on the pharmacokinetics of propofol in adult volunteers," Anesthesiology, vol. 88, no. 5, pp. 1170-1182, 1998.
11. M. M. S. Anthony Absalom, An Overview of TCI and TIVA. Academia Press, 2008.
12. Schnider and et.al, "The influence of age propofol pharmacodynamics," Anesthesiology, vol. 90, pp. 1502{1516, 1999.
13. Wylie and Churchill-Davidson, A Practice of Anesthesia, 7th ed., K. P. Healy TJ, Ed. Arnold Press, 2003.
14. J.-O. Hahn and et.al, "A direct dynamic dose-response model of propofol forindividualized anesthesia care," IEEE transaction on biomedical engineering, vol. 59, no. 2, pp. 571-578, February 2012.
15. K. Turnheim, "Review when drug therapy gets old: pharmacokinetics and pharmacodynamics in the elderly," Elsevier journal of Experimental Gerontology, vol. 38, pp. 843-853, 2003.
16. C. Vanlersberghe, and F. Camu, "Propofol", in Modern Anesthetics, Springer, 2008,Ch 11, pp. 227-252.
17. Meier, R., et al. "Fuzzy control of blood pressure during anesthesia with isoflurane." Fuzzy Systems, 1992., IEEE International Conference on. IEEE, 1992.
18. Dorene A and et.al, "The use of computers for controlling the delivery of anesthesia", Journal of Anesthesiology, Vol. 77, pp563-581, 1992.
19. Meier, R., et al. "Fuzzy logic control of human blood pressure during anesthesia." Control Systems, IEEE 12.6 (1992): 12-17.
20. Morales, Hector Reboso, et al. "Model identification and closed-loop control strategies for propofol anesthesia using bispectralindex(BIS)." WSEAS Transactions on Computers 3.6 (2004): 1884-1888.
21. Ejaz, Khaled, and Jiann-Shiou Yang. "Controlling depth of anesthesia using PID tuning: a comparative model-based study." Control Applications, 2004. Proceedings of the 2004 IEEE International Conference on. Vol. 1. IEEE, 2004.
22. Grant, Paul, and Ole Naesh. "Fuzzy logic and decision-making in anaesthetics." Journal of the Royal Society of Medicine 98.1 (2005): 7-9.
23. Castillo, Oscar, Gabriel Huesca, and Fevrier Valdez. "Evolutionary computing for optimizing type-2 fuzzy systems in intelligent control of non-linear dynamic plants." Fuzzy Information Processing Society, 2005. NAFIPS 2005. Annual Meeting of the North American. IEEE, 2005.
24. Bamdadian, Atieh, FarzadTowhidkhah, and Mohammad Hassan Moradi. "Generalized Predictive Control of depth of anesthesia by using a pharmocokinetic-pharmacodynamic model of the patient." Bioinformatics and Biomedical Engineering, 2008. ICBBE 2008. The 2nd International Conference on. IEEE, 2008.
25. Soltesz, Kristian, et al. "Individualized PID control of depth of anesthesia based on patient model identification during the induction phase of anesthesia." Decision and Control and European Control Conference (CDC-ECC), 2011 50th IEEE Conference on. IEEE, 2011.
26. Rezvanian, Saba, FarzadTowhidkhah, and NematollahGhahramani. "Controlling the depth of anesthesia using model predictive controller and Extended Kalman Filter." Biomedical Engineering (MECBME), 2011 1st Middle East Conference on. IEEE, 2011.
27. Soltesz, Kristian, et al. "Closed-loop anesthesia in children using a PID controller: A pilot study." IFAC Conference on Advances in PID Control. 2012.
28. Van Heusden, Klaske, et al. "Design and clinical evaluation of robust PID control of propofol anesthesia in children." Control Systems Technology, IEEE Transactions on 22.2 (2014): 491-501.
29. Yaochijin and Lipo Wang, "Fuzzy systems in bio-informatics and computational biology", Springer, Studies in fuzziness and soft computing, Vol. 242, 2009.

30. James Carvajal and et.al, “Fuzzy PID controller: Design, performance evaluation, and stability analysis”, information science, Springer, Vol. 123, pp 249-270, 2000.
31. Zadeh, Lotfi A. "Fuzzy logic and approximate reasoning." Syntheses 30.3-4 (1975): 407-428.

AUTHORS PROFILE

Dr. K. A. Bhole is Assistant Professor in the Department of Instrumentation & Control Engineering at College of Engineering Pune. She has completed her PhD (Engineering) from Savitribai Phule Pune University in 2018. Her Research focuses on Biomedical signal processing, Biomechanics, Modelling of biological systems, Fuzzy Logic, Artificial Intelligence and Machine Learning. She has a wide experience of 9 years of research and teaching & research.