# Failure Evaluation of Hybrid Joints using Taguchi Method

**Mahesh J. Patil, Rajendrakumar N. Patil**

***Abstract*: *The structural joints for various applications like automobile, aero planes, ships etc. used mechanical fasteners or adhesives for joining purpose. The mechanical fastener increases the weight of the joints and the adhesives have a catastrophic failure nature. So to reduce the overall weight of the joint and avoid the catastrophic failure of the joint, Hybrid Joint, which is the combination of the two methods (Bolts and adhesives) is used. The Analytical Hierarchal process (AHP) is used to select the parameters that affect the performance of the joint. The selected parameters were bolt size, tightening torque, bolt hole clearance, adhesive type, adhesive thickness, overlap length and joint material and the response variables were failure load and displacement The optimum parameters were selected by using Taguchi analysis with L27 orthogonal array experimental design. The significant parameters were found to be Adhesive type, Adhesive thickness and Joint Material.***

***Keywords: Hybrid joints, Taguchi analysis***

## I. INTRODUCTION

In number of situation the assembly that makes the structural system in function. The function of joints is to assemble number of component and transmit motion and power. These joining techniques are classified as,

1. Adhesively Bonded, Braised and Welded.
2. Mechanically Fastened ( Tension and Sheared loaded fasteners)
3. Hybrid Joints Combined Bolted and Bonded.

Out of these hybrid joints is advance technology in which combination of different joining techniques and material is used. In these techniques two operations performed together or one after another. The advantages of hybrid joints are as follows: i) in these load transfer distribution through the overlap is continuous but for bolted joints it is discontinuous. ii) By using of Adhesives there are decreases in the load transferred by fasteners. iii) From safety point of view presence of bolts reduces the risk of failure even though if adhesive fails. The bolted joint represents the discrete mode while the bonded joint represents the continuous mode. In bonded joints have high stiffness as compared to bolted joints, so when the load had applies on the joint the initial load is taken by the adhesive material. When this adhesive material fails then the load is taken by the bolts, as the adherent material comes in contact with the bolts. In the bolted joints due to the holes in the adherent materials it results in high stress generation around the holes for the fasteners, it affecting the strength of the joint which is major drawback of

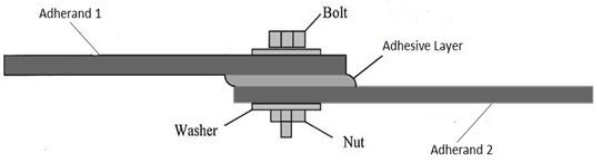


**Fig. 1. The Hybrid Joint**

The bolted joints. In case of the bonded joints form the continuous transfer mode due to this it distributes the load uniformly but bonded joints show a catastrophic failure. Also these joints material show the plastic behavior under different operating conditions which is harmful for the static strength of the joint. To overcome the disadvantages of these joints hybrid joint technology is used in current investigation. The various parameters are studied to find optimum combination of joints.

## II. LITERATURE REVIEW

**Maofeng Fu and P.K. Mallick, [1]** had done their investigation on hybrid joints in which shown that the hybrid joints are having the higher failure load and the joints are last larger fatigue life. According to the author, washer provides the proper clamping pressure over the lap area. Author also performed the Finite Element analysis which gives the clamping pressure. Peel stress reduces by the addition of lateral clamping. Contact element has been specified between the bolt and hole and Finite Element analysis is performed to estimate the peel stresses on the plate. The load limit of the joint is also calculated from the numerical calculations.

**Hart-Smith et.al [2]** in this research stepped lap joint was formed between carbon fiber reinforced plastic and Titanium. The theoretical study of the joint was carried out. In this study as compared to the bonded joints no any significant strength advantage was observed. Both the bonded and bolted joints were found good for repairing damaged bonded joints and restricting the damaged propagation. The important observation was that 98% of applied load was transferred through the adhesives.

**Yogesh T. L and Arun Kumar [3]** In this research they considered three joint namely mechanical joint, adhesive bonded joint and hybrid joint for the assembly of different layers. For this study two different adhesive of low modulus rubber and high modulus acrylic were considered. Tensile test were performed to predict the joint strength and mode of failure for unlike joining method. For acrylic adhesive, the adhesive bond appearance have good performance and for hybrid joint was fit for rubber adhesive and it was proved for rubber adhesive bolting advances in joint strength

**Revised Manuscript Received on October 15, 2019**

Correspondence Author

**Mr. Mahesh J. Patil,** Mechanical Engineering Department, Bharti Vidypeeth (Deemed to be university), College of Enginering, Pune - 411403, India. Email: mjpatil@bvucoep.edu.in

**Prof. Dr. Rajendrakumar N. Patil**, Mechanical Enginering Department, Bharti Vidypeeth's College of Engoneering, Lavale, Pune – 412115, Pune. Email: rajendrakumar.patil@bhartividypeeth..edu

significantly. It was also detected that the strength of joint with high modulus adhesive is better as associated to other and it also noted that the low modulus joint is weak only because of the bolting joint, henceforth mechanical fastening play significant role and hybrid joint is more effective when the mechanical fastening is durable than the bonding.

**Jin-HweKweon et al. [4]** Composite-to-aluminum double lap joints were experimented to obtain the failure loads and modes for three types of joints: adhesive bonding, bolt fastening and adhesive-bolt hybrid joining. A film type adhesive FM73 and a paste type adhesive EA9394S were used for aluminum and composite bonding. A digital microscope camcorder was used to display the failure of the joints. It was found that by using hybrid joining the joint strength was improve when the mechanical fastening is stronger than the bonding, as when the paste type adhesive is used. When the strength of the bolted joint is lower than that of the bonded joint, when the film type adhesive is used, bolt joining contributes little to the strength of the hybrid joint.

**Sadowski, el at. [5]** in this research work author studied riveted, adhesively bonded and hybrid joints (combination of adhesive and rivet) experimentally and numerically. He found that Steel adherents have very high energy absorption and create very efficient adhesive bonding with Hysol9514. The static strength and stiffness of the joint is enhanced by addition of rivets in double lap adhesive joints**.** For the two stages fracture process in the hybrid joint the energy absorption up to the final failure is considerably enhanced.

## III. ANALYTIC HIERARCHY PROCESS (AHP)

The priority and significance of factors is decided by using Analytic Hierarchic Process (AHP), which helps to choose the important factors for conducting the experiments. The AHP provides a means of decomposing the problem into a hierarchy of sub-problems which can more easily be comprehended and subjectively evaluated. The subjective evaluations are converted into numerical values and processed to rank each alternative on a numerical scale. The methodology of the AHP can be explained in following steps: The application of AHP methodology involves four phases, namely:

**Step 1:** Structuring the problem and building the AHP model.

**Step 2:** Collecting data through pairwise comparisons by expert interviews.

Gradation of scale for the comparison is given with the help of Table 1

**Step 3:** Determining normalized priority weights of individual factors.

**Step 4:** Analyzing the priority weights and deriving a solution to the problem.

**Table- I: Factors under Consideration for AHP**

| Sr. No | Input Parameters |
|---|---|
| IP1 | Type of Joint |
| IP2 | Bolt tightening Torque |
| IP3 | Type of washer |
| IP4 | Bolt hole clearance |
| IP5 | Edge distance to diameter ratio |
| IP6 | Bolt diameter to length ratio |
| IP7 | Bolt size |
| IP8 | Adhesive thickness |
| IP9 | Type of Adhesive |
| IP10 | Curing time |
| IP11 | Surface Preparation |
| IP12 | Adhesive strength |
| IP13 | Material for joint |
| IP14 | Overlap length |
| IP15 | Bolt Size |

**Table- II: Rankings of Parameters**

| Ranking | Input Parameters (Abbreviated) | Input Parameters |
|---|---|---|
| 1 | IP14 | Overlap length |
| 2 | IP8 | Adhesive thickness |
| 3 | IP9 | Type of Adhesive |
| 4 | IP4 | Bolt-hole clearance |
| 5 | IP13 | Material for joint |
| 6 | IP2 | Bolt tightening torque |
| 7 | IP15 | Bolt Size |
| 8 | IP1 | Type of Joint |
| 9 | IP3 | Type of washer |
| 10 | IP7 | Bolt working condition |
| 11 | IP12 | surface preparation |
| 12 | IP11 | Adhesive strength |
| 13 | IP10 | curing time |
| 14 | IP5 | Edge distance to diameter ratio |
| 15 | IP6 | Bolt diameter to length ratio |

The CI/RI ratio has to be less than **0.10,** only than the results are consistent. The Random index is selected from table 3.By using this value the ratio CI/RI is found out its value is **0.0925.**Since the CI/RI score is sufficiently small, hence the comparisons are probably consistent enough to be useful. Hence the above parameters are consistent and used.

**Table- III: Normalized comparison Matrix**

| | A | B | C | D | E | F | G | H | I | J | K | L | M | N | O | P | | | |
|---|---|---|---|---|---|---|---|---|---|---|---|---|---|---|---|---|---|---|---|
| 1 | | IP1 | IP2 | IP3 | IP4 | IP5 | IP6 | IP7 | IP8 | IP9 | IP10 | IP11 | IP12 | IP13 | IP14 | IP15 | Score | Produc | Ratio=P/S |
| 2 | IP1 | 1 | 3 | 2 | 0.2000 | 3 | 5 | 3 | 0.2000 | 0.1429 | 7 | 5 | 3 | 0.2000 | 0.1429 | 0.2000 | 0.0489 | 0.949 | 19.399299 |
| 3 | IP2 | 0.3333 | 1 | 3 | 0.2000 | 7 | 5 | 3 | 0.2000 | 0.2000 | 7 | 5 | 5 | 0.2000 | 3 | 5 | 0.085 | 1.717 | 20.172738 |
| 4 | IP3 | 0.5000 | 0.3333 | 1 | 0.2000 | 3 | 3 | 3 | 0.1429 | 0.1429 | 5 | 5 | 3 | 0.3333 | 0.2000 | 0.2000 | 0.0360 | 0.626 | 17.395146 |
| 5 | IP4 | 5 | 5 | 5 | 1 | 5 | 7 | 7 | 0.2000 | 0.3333 | 5 | 5 | 5 | 0.3333 | 3 | 3 | 0.11 | 2.414 | 22.022324 |
| 6 | IP5 | 0.3333 | 0.1429 | 0.3333 | 0.2000 | 1 | 1 | 0.2000 | 0.1429 | 0.1429 | 0.3333 | 0.3333 | 0.3333 | 0.1429 | 0.1429 | 0.1429 | 0.0096 | 0.195 | 20.273115 |
| 7 | IP6 | 0.2000 | 0.2000 | 0.3333 | 0.1429 | 1 | 1 | 0.2000 | 0.1429 | 0.1429 | 0.3333 | 0.3333 | 0.3333 | 0.1429 | 0.1429 | 0.1429 | 0.009 | 0.187 | 20.075474 |
| 8 | IP7 | 0.3333 | 0.3333 | 0.3333 | 0.1429 | 5 | 5 | 1 | 0.2000 | 0.2000 | 3 | 3 | 3 | 0.1250 | 0.1250 | 0.1250 | 0.0302 | 0.475 | 15.73506 |
| 9 | IP8 | 5 | 5 | 7 | 5 | 7 | 7 | 5 | 1 | 5 | 5 | 3 | 3 | 5 | 0.2000 | 5 | 0.155 | 3.596 | 23.215623 |
| 10 | IP9 | 7 | 5 | 7 | 3 | 7 | 7 | 5 | 0.2000 | 1 | 7 | 5 | 3 | 3 | 0.2000 | 5 | 0.1211 | 2.75 | 22.70834 |
| 11 | IP10 | 0.1429 | 0.1429 | 0.2000 | 0.2000 | 3 | 3 | 0.3333 | 0.2000 | 0.1429 | 1 | 0.3333 | 0.3333 | 0.1429 | 0.1429 | 0.3333 | 0.015 | 0.255 | 17.369291 |
| 12 | IP11 | 0.2000 | 0.2000 | 0.2000 | 0.2000 | 3 | 3 | 0.3333 | 0.3333 | 0.2000 | 3 | 1 | 0.3333 | 0.2000 | 0.2000 | 0.2000 | 0.0195 | 0.338 | 17.318632 |
| 13 | IP12 | 0.3333 | 0.2000 | 0.3333 | 0.2000 | 3 | 3 | 0.3333 | 0.3333 | 0.3333 | 3 | 3 | 1 | 0.3333 | 0.3333 | 0.3333 | 0.026 | 0.466 | 17.794148 |
| 14 | IP13 | 5 | 5 | 3 | 3 | 7 | 7 | 8 | 0.2000 | 0.3333 | 7 | 5 | 3 | 1 | 0.2000 | 0.3333 | 0.0924 | 1.982 | 21.448557 |
| 15 | IP14 | 7 | 0.3333 | 5 | 0.3333 | 7 | 7 | 8 | 5 | 5 | 7 | 5 | 3 | 5 | 1 | 5 | 0.167 | 3.625 | 21.772372 |
| 16 | IP15 | 5 | 0.3333 | 5 | 0.3333 | 7 | 7 | 8 | 0.2000 | 0.2000 | 3 | 5 | 3 | 3 | 0.2000 | 1 | 0.0753 | 1.525 | 20.245684 |
| SUM | | 37.38 | 26.22 | 39.73 | 14.35 | 69 | 71 | 52.4 | 8.695 | 13.51 | 63.67 | 51 | 36.33 | 19.15 | 9.23 | 26.01 | | CI= | 0.3425991 |

**Table- IV: Scores for Requirement**

| | A | B | C | D | E | F | G | H | I | J | K | L | M | N | O | P | Average | | Percentage Contribution | Ranking |
|---|---|---|---|---|---|---|---|---|---|---|---|---|---|---|---|---|---|---|---|---|
| 1 | | IP1 | IP2 | IP3 | IP4 | IP5 | IP6 | IP7 | IP8 | IP9 | IP10 | IP11 | IP12 | IP13 | IP14 | IP15 | SUM | SCORES | | |
| 2 | IP1 | 0.027 | 0.114 | 0.05 | 0.014 | 0.043 | 0.07 | 0.057 | 0.023 | 0.011 | 0.11 | 0.098 | 0.083 | 0.01 | 0.015 | 0.008 | 0.734 | 0.049 | 4.8955693 | 8 |
| 3 | IP2 | 0.0089 | 0.0381 | 0.0755 | 0.0139 | 0.1014 | 0.0704 | 0.0573 | 0.0230 | 0.0148 | 0.1099 | 0.0980 | 0.1376 | 0.0104 | 0.3250 | 0.1922 | 1.277 | 0.085 | 8.5115216 | 6 |
| 4 | IP3 | 0.0134 | 0.0127 | 0.0252 | 0.0139 | 0.0435 | 0.0423 | 0.0573 | 0.0164 | 0.0106 | 0.0785 | 0.0980 | 0.0826 | 0.0174 | 0.0217 | 0.0077 | 0.541 | 0.036 | 3.6072063 | 9 |
| 5 | IP4 | 0.1338 | 0.1907 | 0.1258 | 0.0697 | 0.0725 | 0.0986 | 0.1336 | 0.0230 | 0.0247 | 0.0785 | 0.0980 | 0.1376 | 0.0174 | 0.3250 | 0.1153 | 1.644 | 0.11 | 10.961753 | 4 |
| 6 | IP5 | 0.0089 | 0.0054 | 0.0084 | 0.0139 | 0.0145 | 0.0141 | 0.0038 | 0.0164 | 0.0106 | 0.0052 | 0.0065 | 0.0092 | 0.0075 | 0.0155 | 0.0055 | 0.145 | 0.01 | 0.9697326 | 14 |
| 7 | IP6 | 0.0054 | 0.0076 | 0.0084 | 0.0100 | 0.0145 | 0.0141 | 0.0038 | 0.0164 | 0.0106 | 0.0052 | 0.0065 | 0.0092 | 0.0075 | 0.0155 | 0.0055 | 0.14 | 0.009 | 0.9339372 | 15 |
| 8 | IP7 | 0.0089 | 0.0127 | 0.0084 | 0.0100 | 0.0725 | 0.0704 | 0.0191 | 0.0230 | 0.0148 | 0.0471 | 0.0588 | 0.0826 | 0.0065 | 0.0135 | 0.0048 | 0.453 | 0.03 | 3.0208859 | 10 |
| 9 | IP8 | 0.1338 | 0.1907 | 0.1762 | 0.3484 | 0.1014 | 0.0986 | 0.0954 | 0.1150 | 0.3700 | 0.0785 | 0.0588 | 0.0826 | 0.2610 | 0.0217 | 0.1922 | 2.324 | 0.155 | 15.495611 | 2 |
| 10 | IP9 | 0.1873 | 0.1907 | 0.1762 | 0.2090 | 0.1014 | 0.0986 | 0.0954 | 0.0230 | 0.0740 | 0.1099 | 0.0980 | 0.0826 | 0.1566 | 0.0217 | 0.1922 | 1.817 | 0.121 | 12.111497 | 3 |
| 11 | IP10 | 0.0038 | 0.0054 | 0.0050 | 0.0139 | 0.0435 | 0.0423 | 0.0064 | 0.0230 | 0.0106 | 0.0157 | 0.0065 | 0.0092 | 0.0075 | 0.0155 | 0.0128 | 0.221 | 0.015 | 1.4738199 | 13 |
| 12 | IP11 | 0.0054 | 0.0076 | 0.0050 | 0.0139 | 0.0435 | 0.0423 | 0.0064 | 0.0383 | 0.0148 | 0.0471 | 0.0196 | 0.0092 | 0.0104 | 0.0217 | 0.0077 | 0.293 | 0.02 | 1.9525177 | 12 |
| 13 | IP12 | 0.0089 | 0.0076 | 0.0084 | 0.0139 | 0.0435 | 0.0423 | 0.0064 | 0.0383 | 0.0247 | 0.0471 | 0.0588 | 0.0275 | 0.0174 | 0.0361 | 0.0128 | 0.394 | 0.026 | 2.6250966 | 11 |
| 14 | IP13 | 0.1338 | 0.1907 | 0.0755 | 0.2090 | 0.1014 | 0.0986 | 0.1527 | 0.0230 | 0.0247 | 0.1099 | 0.0980 | 0.0826 | 0.0522 | 0.0217 | 0.0128 | 1.387 | 0.092 | 9.2442161 | 5 |
| 15 | IP14 | 0.1873 | 0.0127 | 0.1258 | 0.0232 | 0.1014 | 0.0986 | 0.1527 | 0.5750 | 0.3700 | 0.1099 | 0.0980 | 0.0826 | 0.2610 | 0.1083 | 0.1922 | 2.499 | 0.167 | 16.659722 | 1 |
| 16 | IP15 | 0.1338 | 0.0127 | 0.1258 | 0.0232 | 0.1014 | 0.0986 | 0.1527 | 0.0230 | 0.0148 | 0.0471 | 0.0980 | 0.0826 | 0.1566 | 0.0217 | 0.0384 | 1.131 | 0.075 | 7.5369136 | 7 |
| | | 1 | 1 | 1 | 1 | 1 | 1 | 1 | 1 | 1 | 1 | 1 | 1 | 1 | 1 | 1 | 15 | 1 | | |

## IV. DESIGN OF EXPERIMENTS AND TAGUCHI ANALYSIS

### A. *Joint Geometry and Material properties*

The geometry of the joint used for present study is represented in figure

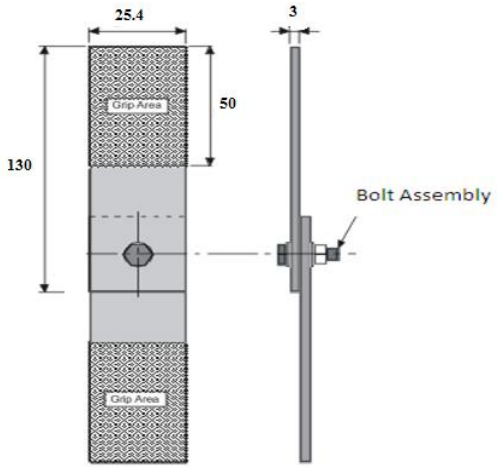


**Fig. 2. Joint Geometry**

**Table- V: ISO 262 Metric screw threads**

| Nominal Diameter ,D (mm) | | Pitch ,P (mm) | |
|---|---|---|---|
| 1st Choice | 2nd Choice | Course thread | Fine Thread |
| 1 | | 0.25 | 0.2 |
| 1.2 | | 0.25 | 0.2 |
| | 1.4 | 0.3 | 0.2 |
| 1.6 | | 0.35 | 0.2 |
| | 1.8 | 0.35 | 0.2 |
| 2 | | 0.4 | 0.25 |
| 2.5 | | 0.45 | 0.35 |
| 3 | | 0.5 | 0.35 |
| | 3.5 | 0.6 | 0.35 |
| 4 | | 0.7 | 0.5 |
| 5 | | 0.8 | 0.5 |
| 6 | | 1 | 0.75 |
| | 7 | 1 | 0.75 |
| 8 | | 1.25 | 1 or 1.75 |
| 10 | | 1.5 | 1.25 or 1 |
| 12 | | 1.75 | 1.5 or 1.25 |
| | 14 | 2 | 1.5 |
| 16 | | 2 | 1.5 |
| | 18 | 2.5 | 2 or 1.5 |
| 20 | | 2.5 | 2 or 1.5 |

**Table- VI: Types of Adhesives**

| Sr. .No. | Types of Adhesives |
|---|---|
| 1 | Anaerobic |
| 2 | Cyanoacrylates |
| 3 | Toughened Acrylics / Methacrylate |
| 4 | UV curable adhesives |
| 5 | Epoxies |

The test specimen material was aluminum and its properties are given in table below

**Table- VII: Material Properties**

| Properties | Value |
|---|---|
| Density | 2.7e-09 (tonne / mm³) |
| Young's Modulus | 70000 (Mpa) |
| Poisons Ratio | 0.28 |
| Yield Stress | 265 N/mm² |

**Table- VII: Adhesive Properties**

| Properties | LOCTITE AA3342 | LOCTITE EA E-30 HV | LOCTITE HY 4090 |
|---|---|---|---|
| Density | 1.08e-09(tonne/mm²) | 1.08e-09(tonne/mm² | 1.08e-09(tonne/mm |
| | | ) | ²) |
| Youngs Modulus | 478 (N/mm²) | 1050 (N/mm²) | 565 (N/mm²) |
| Poissons Ratio | 0.2 | 0.25 | 0.25 |
| Maximum through thickness tensile stress | 9.9 (N/mm²) | 5.5 | 7.1 |
| Energy per unit area (GCTEN) | 3.465 | 4.4 | 2.556 |
| Maximum through thickness shear stress | 15 (N/mm²) | 12.6 (N/mm²) | 7.6 (N/mm²) |
| Energy per unit area (GCSHR) | 18.75 | 7.56 | 5.11 |
| Strain rate | 2.8 | 2.8 | 2.8 |

### B. *Experimentation and Design Of Experiments*

A computerized universal testing machine was used from Star India. The machine has 10 ton capacity with 100, 1000 and 10000 kg Load cells used in it. The gauge lengths used for the specimen are, 12.5,25,50 mm to carry out the experiments


**Fig. 3. Fixture for Clamping Specimens**

**Fig. 4. Universal Testing Machine**

The parameters considered for the experimentation are as follows:

1) Bolt Size
2) Bolt Tightening Torque
3) Bolt hole Clearance
4) Adhesive type
5) Adhesive thickness
6) Overlap length
7) Joint Material

**Table- IX: Design of Experiment Parameters and their levels**

| Sr. No. | Parameters | Symbol | Low(-1) | Medium(0) | High(+) |
|---|---|---|---|---|---|
| 1 | Bolt size(mm) | Bs | M4*0.5 | M5*0.5 | M6*0.75 |
| 2 | Bolt Tightening Torque(N-m) | Bt | 4 | 5 | 6 |
| 3 | Bolt Hole Clearance(mm) | Bhc | 0.1 | 0.2 | 0.3 |
| 4 | Adhesive Type | At | Loctite (AA3342) | Loctite (4090) | Loctite (EA E-30HV) |
| 5 | Adhesive Thickness(mm) | Athi | 1.0 | 1.5 | 2 |
| 6 | Overlap Length(mm) | OL | 20 | 25 | 30 |
| 7 | Joint Material | JM | AL+AL | GFRP+GFRP | AL+GFRP |

**Table- II: Design of Experiment in Coded Form**

**Table- X: Design of Experiment in Coded Form**

| Trial No. | Bolt size | Bolt Tightening Torque | Bolt Hole Clearance | Adhesive Type | Adhesive Thickness | Overlap Length | Joint Material |
|---|---|---|---|---|---|---|---|
| 1 | 1 | 1 | 1 | 1 | 1 | 1 | 1 |
| 2 | 1 | 1 | 1 | 1 | 2 | 2 | 2 |
| 3 | 1 | 1 | 1 | 1 | 3 | 3 | 3 |
| 4 | 1 | 2 | 2 | 2 | 1 | 1 | 1 |
| 5 | 1 | 2 | 2 | 2 | 2 | 2 | 2 |
| 6 | 1 | 2 | 2 | 2 | 3 | 3 | 3 |
| 7 | 1 | 3 | 3 | 3 | 1 | 1 | 1 |
| 8 | 1 | 3 | 3 | 3 | 2 | 2 | 2 |
| 9 | 1 | 3 | 3 | 3 | 3 | 3 | 3 |
| 10 | 2 | 1 | 2 | 3 | 1 | 2 | 3 |
| 11 | 2 | 1 | 2 | 3 | 2 | 3 | 1 |
| 12 | 2 | 1 | 2 | 3 | 3 | 1 | 2 |
| 13 | 2 | 2 | 3 | 1 | 1 | 2 | 3 |
| 14 | 2 | 2 | 3 | 1 | 2 | 3 | 1 |
| 15 | 2 | 2 | 3 | 1 | 3 | 1 | 2 |
| 16 | 2 | 3 | 1 | 2 | 1 | 2 | 3 |
| 17 | 2 | 3 | 1 | 2 | 2 | 3 | 1 |
| 18 | 2 | 3 | 1 | 2 | 3 | 1 | 2 |
| 19 | 3 | 1 | 3 | 2 | 1 | 3 | 2 |
| 20 | 3 | 1 | 3 | 2 | 2 | 1 | 3 |
| 21 | 3 | 1 | 3 | 2 | 3 | 2 | 1 |
| 22 | 3 | 2 | 1 | 3 | 1 | 3 | 2 |
| 23 | 3 | 2 | 1 | 3 | 2 | 1 | 3 |
| 24 | 3 | 2 | 1 | 3 | 3 | 2 | 1 |
| 25 | 3 | 3 | 2 | 1 | 1 | 3 | 2 |
| 26 | 3 | 3 | 2 | 1 | 2 | 1 | 3 |
| 27 | 3 | 3 | 2 | 1 | 3 | 2 | 1 |

**Table- XI: Responses**

| Sr. No | Failure Load (N) | | | Displacement (mm) | | |
|---|---|---|---|---|---|---|
| | Repetition 1 | Repetition 2 | Mean | Repetition 1 | Repetition 2 | Mean |
| 1 | 6626 | 6589 | 6607.5 | 10.3 | 11.2 | 10.75 |
| 2 | 4274.8 | 4307 | 4290.9 | 4.1 | 4.4 | 4.25 |
| 3 | 4890.2 | 4910.2 | 4900.2 | 5.1 | 5.3 | 5.2 |
| 4 | 6453 | 6512 | 6482.5 | 10.4 | 11.1 | 10.75 |
| 5 | 3792 | 3841 | 3816.5 | 4.3 | 4.5 | 4.4 |
| 6 | 4581 | 4632.3 | 4606.65 | 4.8 | 5.1 | 4.95 |
| 7 | 3456 | 3492.4 | 3474.2 | 10.1 | 10.8 | 10.45 |
| 8 | 2040 | 2156.7 | 2098.35 | 5.6 | 6.1 | 5.85 |
| 9 | 2312 | 2395.6 | 2353.8 | 7.01 | 7.4 | 7.205 |
| 10 | 4008 | 3987.4 | 3997.7 | 6.75 | 7.3 | 7.025 |
| 11 | 2582 | 2632.2 | 2607.1 | 13.5 | 14.2 | 13.85 |
| 12 | 2116.8 | 2218.3 | 2167.55 | 8.2 | 8.9 | 8.55 |
| 13 | 7477.4 | 7510.4 | 7493.88 | 6.3 | 6.6 | 6.45 |
| 14 | 5507.6 | 5493.6 | 5500.6 | 13.7 | 15.3 | 14.5 |
| 15 | 4402 | 4491.4 | 4446.7 | 6.8 | 7.2 | 7 |
| 16 | 5556.6 | 5526.3 | 5541.45 | 5.5 | 5.9 | 5.7 |
| 17 | 3423 | 3378.8 | 3400.9 | 10.9 | 11.7 | 11.3 |
| 18 | 3579 | 3498.6 | 3579 | 5.4 | 5.6 | 5.5 |
| 19 | 4429.6 | 4503.9 | 4466.75 | 5.4 | 5.8 | 5.6 |
| 20 | 5203.8 | 5185.3 | 5194.55 | 6.3 | 6.5 | 6.4 |
| 21 | 5345 | 5301.2 | 5323.1 | 14.4 | 15.7 | 15.05 |

| | | | | | | |
|---|---|---|---|---|---|---|
| 22 | 2486 | 2413.5 | 2449.75 | 3.8 | 4.1 | 3.95 |
| 23 | 3452 | 3392.8 | 3422.4 | 6.4 | 6.9 | 6.65 |
| 24 | 3978.8 | 4007.2 | 3993 | 15.1 | 16.4 | 15.75 |
| 25 | 5412 | 5494.3 | 5453.15 | 4.9 | 5.2 | 5.05 |
| 26 | 6624.8 | 6587.7 | 6606.25 | 6.1 | 6.3 | 6.2 |
| 27 | 7412 | 7364.6 | 7388.3 | 15.2 | 16.6 | 15.9 |

### C. *Taguchi analysis and ANOVA for Failure Load*

a. Taguchi Analysis of Failure load:

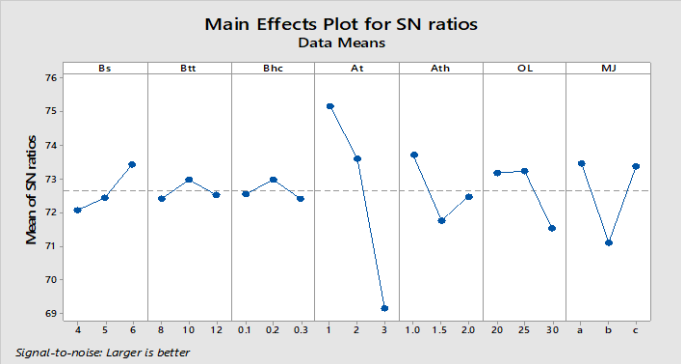


**Fig. 5. Main effects plot for S/N ratio for failure load**

The above graph gives the sn ratio's for various parameters under study. They also provide the optimum setting combination which will yield the maximum failure load. The seven different parameters were studied by using Taguchi's $L_{27}$ orthogonal array. The first graph indicates that the best bolt size will be M6 as the cross section of the bolt shank increases, the strength of the joint increases. The tightening torque is best at 10 N-m, higher the tightening torque, more the preload applied, increases the strength of the joint. In the case of Bolt hole clearance ,0.2 mm is observed as the optimum value which affects the response characteristics where as others are average or below average. Adhesive type indicates that the first type of adhesive gives higher value for the failure load. The slope of the graph is also more so the factor is significant. The adhesive thickness of 1mm is giving the optimum results for the failure load other settings are giving values lesser than average. The slope of the line is more so this factor is also significant. The overlap length of 25 mm is giving the maximum failure load. The last graph shows that Aluminum and Aluminum combination of the joint gives maximum failure loads and the dissimilar materials are also giving good results as compared to composites only.

b. Analysis of Variance for Failure Load

**Table- XII: Analysis of Variance for Failure Load**

| Sr. No. | Source (Parameters) | Degree of Freedom | Sum of Squares | Adj Mean Square | F value | p-value |
|---|---|---|---|---|---|---|
| 1 | Bolt size | 2 | 2335623 | 1167811 | 9.94 | 0.201 |
| 2 | Bolt Tightening Torque | 2 | 464437 | 232219 | 1.98 | 0.181 |
| 3 | Bolt Hole Clearance | 2 | 1362907 | 681453 | 5.80 | 0.017 |
| 4 | Adhesive Type | 2 | 38488383 | 19244192 | 163.80 | 0.044 |
| 5 | Adhesive Thickness | 2 | 5066941 | 2533470 | 21.56 | 0.023 |
| 6 | Overlap Length | 2 | 4078558 | 2039279 | 17.36 | 0.000 |
| 7 | Joint Material | 2 | 10126797 | 5063398 | 43.10 | 0.034 |
| | Error | 12 | 1409791 | 117483 | | |
| | Total | 26 | 63333437 | | | |

c. Confirmatory experiment of failure load

**Table- XIII: Confirmatory Experiment Results for failure load**

| | Optimum Cutting Factors | |
|---|---|---|
| | **Predicted Values** | **Experimental Values** |
| **Level** | 3-2-2-1-1-2-1 | 3-2-2-1-1-2-1 |
| **Failure Load** | 7493.88 | 7521.56 |
| **Displacement** | 6.45 | 7.83 |

### D. *Taguchi analysis and ANOVA for Displacement*

a. Taguchi Analysis of Displacement

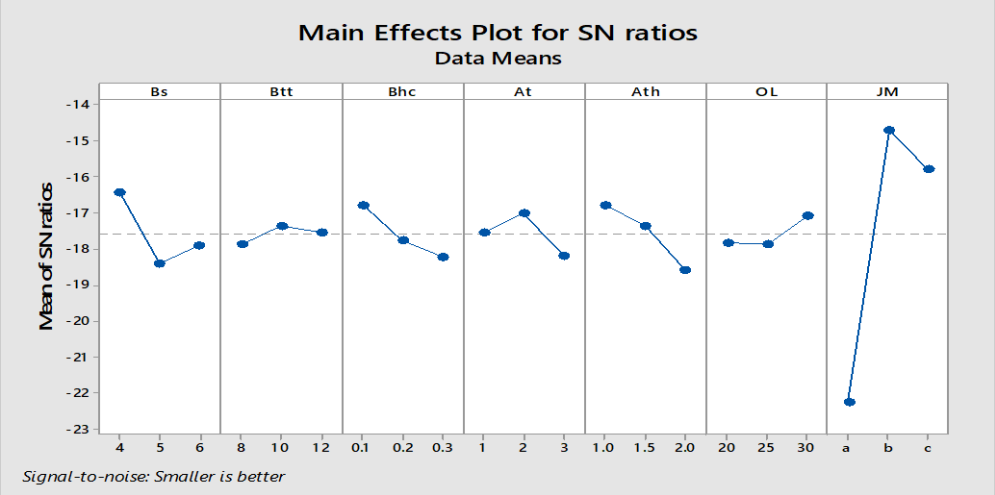


**Fig. 6 Main effects plot of S/N Ratio for Displacement**

The optimum value for bolt size is found to be M4; other two sizes are showing results below average. The bolt tightening torque 10N-m is showing above average readings, but this parameter is not significant since the line is almost parallel to x axis. The bolt hole clearance of 0.1mmis giving the optimum results as it has mean values above average. The second type of adhesive is giving the optimum results and the other values lie on or below average values. The adhesive thickness of 1 mm is giving the optimum value. The overlap length of 30 mm is giving the optimum value and the displacement is optimum in the joint formed from Glass Fiber Reinforced Plastic (GFRP) element, as the material is brittle.

b. Analysis of Variance for Displacement

**Table- IX: Analysis of Variance for Displacement**

| Sr. No | Source (Parameters) | Degree of Freedom | Adj sum of Squares | Adj Mean Square | F value | P-value |
|---|---|---|---|---|---|---|
| 1 | Bolt size | 2 | 19.967 | 9.983 | 18.84 | 0.000 |
| 2 | Bolt Tightening Torque | 2 | 0.708 | 0.354 | 0.67 | 0.531 |
| 3 | Bolt Hole Clearance | 2 | 5.588 | 2.794 | 5.27 | 0.023 |
| 4 | Adhesive Type | 2 | 5.204 | 2.602 | 4.91 | 0.028 |
| 5 | Adhesive Thickness | 2 | 21.167 | 10.583 | 19.97 | 0.000 |
| 6 | Overlap Length | 2 | 5.309 | 2.655 | 5.01 | 0.026 |
| 7 | Joint Material | 2 | 317.958 | 158.979 | 300.02 | 0.000 |
| | Error | 12 | 6.359 | 0.530 | | |
| | Total | 26 | 382.259 | | | |

c. Confirmatory Experiment of displacement

**Table- XV: Confirmatory experiment Results for displacement**

| | Optimum Cutting Factors | |
|---|---|---|
| | **Predicted Values** | **Experimental Values** |
| **Level** | 2-2-1-2-1-3-2 | 2-2-1-2-1-3-2 |
| **Failure Load** | 7493.88 | 7521.56 |
| **Displacement** | 6.45 | 7.94 |

- Load capacity of joint increases with increase in bolt dimension as larger bolt had larger shear area.
- Load capacity of joint increases with decrease in adhesive thickness which result in less shear and peel stresses. However it is also observed that due to increasing the thickness of the adhesive, peel stresses near the bolt area remain unchanged and hence the crack may occur at same load

as compared to the less thickened adhesive joint.

- Load capacity of joint decreases with increase in overlapping length which seems opposite to physics but reason for dropping in the load capacity is shear stress in the area reduces which is obvious and hence the less load being transferred to the bolt due to less relative displacement between the plates. Increasing the load from 20mm to 30mm is.
- Load capacity of joint decreases with the increasing bolt hole clearances as it allow the relative displacement between the bolt and hole which further reduce the capacity of joint. Press fit is always be the strong joint as it won't allow the any relative movement.
- Load capacity of single component adhesive is greater than the mixing adhesive. Hence joint with adhesive 3342 is better load capacity as compared to the other two adhesive use.

## V. CONCLUSION

Total of 27 factors are analyzed which are calculated as per Taguchi method and following conclusions are made:

1. All the test samples are tested using the Universal testing Machine and load displacement curve has been extracted.
2. The best combination of factor is calculated from the ANOVA, and the best combination is found out to be $A_3B_3C_2D_1E_3F_2G_2$ i.e. hybrid joint having bolt of diameter 6mm with applied tightening torque of 6 N-m, clearance of 0.2mm in bolt, adhesive of 3342 type with adhesive thickness of 1 mm and having bonding overlapping length of 25 mm and plate material type
3. Load capacity of joint increases with increase in bolt dimension Load capacity of joint increases with decrease in adhesive thickness.
4. Load capacity of joint decreases with increase in overlapping length which seems opposite to physics. Load capacity of joint decreases with the increasing bolt hole clearances as it allow the relative displacement between the bolt and hole.
5. Load capacity of single component adhesive is greater than the mixing adhesive.

## REFERENCES


1. M. Fu and P. K. Mallick, Fatigue of hybrid(adhesive/bolted) joints in SRIM. International Journal of Adhesion and Adhesives Vol. 21, No. 2, pp 145-159, 2001.
2. Hart-Smith LJ. Bonded-bolted composite joints. J Aircraft 1985;22(11):993–1000
3. Yogesh T. L., Arunkumar N. Failure Mode and Analysis of the Bonded/bolted Joints between a Hybrid Fibre Reinforced Polymer and Aluminium Alloy. Department of Mechanical Engineering St. Joseph's College Of Engineering, Chennai, India. Vol.3, No. 2, 2015, 49-60.
4. Jin-HweKweon, Jae-Woo Jung, Tae-Hwan Kim. Failure of carbon composite-to-aluminum joints with combined mechanical fastening and adhesive bonding. School of Mechanical and Aerospace Engineering, Gyeongnam, Republic of Korea. 75 (2006) 192–198.
5. S.W.Boyd,J.I.R.Blake ,R.A.Shenoi ,J.Mavella Optimization of steel-composite connections for marine applications ' composite materials,2008


## AUTHORS PROFILE

**Mahesh Patil**, Ph.D. Research Scholar, Bharati Vidyapeeth (Deemed to be University), Pune. Has a teaching experience of 18 years. His research area includes Manufacturing Engineering and CAD/CAM.

**Dr. Rajendrakumar N. Patil**, Professor, Bharati Vidyapeeth (Deemed to be University), Pune. His research area are manufacturing engineering.