Series-fed 3×3 Square Patch Array for Wireless Communication Applications using CSTMWS

V. Prakasam, P. Sandeep

Abstract— ***The wireless communications systems have been really develop to the extraordinary performance applications. Present days, the WCS offers extraordinary data rate transmission and preserve rising for advanced data rates equipment. In wireless communication systems applications using various types of micro strip antennas. This paper presents the design of a 3×3 series-fed square micro strip patch array antenna to function at the frequency of 5.4 GHz and 50 ohm line port impedance. The micro strip feed line frequently combines a quarter-wave (λ/4) transformer for matching of impedance. The design of proposed antenna we are expending straight line feed micro strip line feeding technique. This antenna array is based on Rogers RT 5880 loss free material, which is having 2.2 relative permittivity constant. The series fed 3 by 3 square patch array antenna is designed on Computer Simulation Technology (CST) Microwave Studio (MWS) simulation software. After simulation, the antenna presentation features such as return loss, percentage bandwidth, directivity, antenna gain, radiation efficiency, E-Field, H-Field and radiation Pattern are measured.***

Index Terms: ***Square, Rogers RT 5880, CST, MWS, quarter-wave, radiation Pattern.***

I. INTRODUCTION

A micro-strip antenna has numerous advantages such as low profile, light weight, small volume, conformal and mass manufacture in addition to low Cost. It has involved cumulative attention of numerous investigators to investigate this category of antenna or arrays of numerous shapes to meet numerous practical applications. The analysis and design of plentiful methods micro-strip antenna mounted on dissimilar structures have been extensively considered. The construction of micro-strip transmission line contains of a copper trace separated from a ground plane by an insulating substrate.

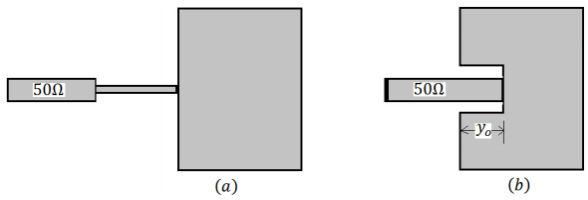

Fig. 1. Micro strip patch antenna with feed from side.

The Micro strip patch antenna with feed from side shown in below figure 1. The figure 1(a) shows the feeding method of micro strip patch (Micro strip line feed with quarter wave transformer) and the below figure 2 is commonly (Inset Feed) used. Which are together single patch antenna and multi-patches (array) antennas.

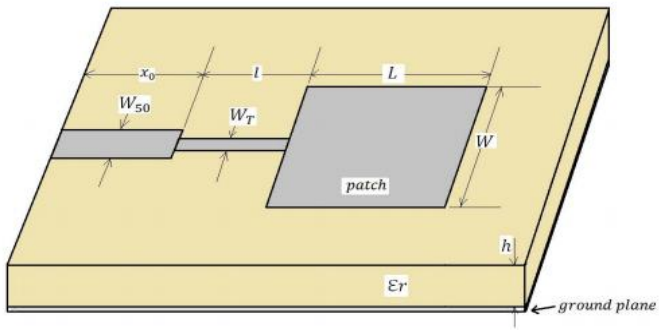

Fig. 2. Micro strip line feed with quarter wave transformer.

The patch impedance is given by

$$Z_a = 90\frac{\varepsilon r^2}{\varepsilon r-1}\left(\frac{L}{W}\right)^2$$

The transition unit impedance of characteristic must be:

$$Z_T = \sqrt{50 + Z_a}$$

The width of the transition line is calculated from

$$Z_T = \frac{60}{\sqrt{\varepsilon_r}} ln\left(\frac{8d}{W_T} + \frac{W_T}{4d}\right)$$

The width of the 50Ω micro strip feed can be found using the equation below:

$$Z_o = \frac{120\pi}{\sqrt{\varepsilon reff}\left(1.393+\frac{W}{h}+\frac{2}{3}\ln\left(\frac{W}{h}+1.444\right)\right)}$$

Where Z_0 = 50 ohm. The length of the strip can be found

$$R_{in(x=0)} = cos^2\left(\frac{\pi}{L}x_o\right)$$

The transition line length is quarter the wavelength:

$$l = \frac{\lambda}{4} = \frac{\lambda_o}{4\sqrt{\varepsilon_{reff}}}$$

In this paper, 3 by 3 series feed patch antenna is used to design the MSPA array for wireless communication. The frequency sensitive and lead to bandwidth parameters are limits of series feed array. When the frequency is rehabilitated, the phase at the radiating elements modifications consistently to the measurement of feed line so that the phase at the aperture tilts in a linear way and the beam is scanned. This result can be valuable for frequency-scanning arrays, but typically it is undesirable.

Revised Manuscript Received on October 15, 2019

V. Prakasam, Assistant Professor in the department of Electronics and Communication Engineering at vignan institute of technology and sciences, Deshumuki, Telangana, India

P. Sandeep, Assistant Professor in the department of Electronics and Communication Engineering at vignan institute of technology and sciences, Deshumuki, Telangana, India

The improved electrical path length to each radiating element has to be calculated as a function of frequency and occupied into interpretation when correcting the phase shifters.

II. SERIES-FED 3 BY 3 SQUARE PATCH ARRAY

Micro strip antennas are also named as patch antennas, which are very widespread antennas in the microwave frequency range because of their straightforwardness and compatibility with circuit panel equipment. The SPA (square patch antenna) is one of the greatest frequently used micro strip antennas. Edge-fed micro strip antennas are suitable to straight integration with micro strip circuits, since the antenna can be imprinted on the similar substrate.

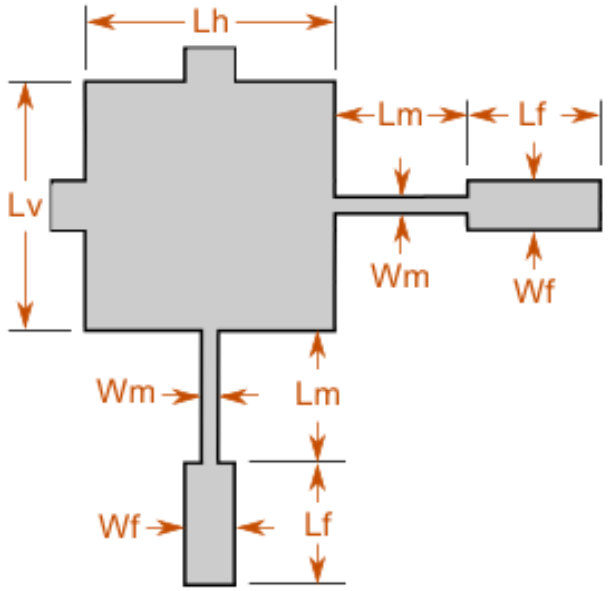

Fig. 3. The configuration of single two-port micro strip patch antenna.

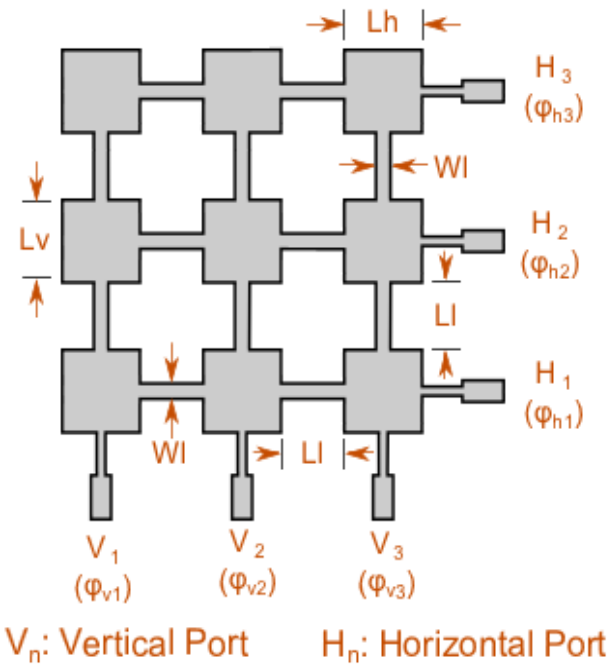

Fig. 4. The configuration of series-fed 3×3 patch antenna array.

III. SERIES-FED 3 X 3 PATCH ARRAY ANTENNA CONFIGURATION

The design specifications of series fed 3 by 3 micro strip patch array are shown below:

f_0 = Center Frequency = 5.4 GHz
$\lambda_0 = c/f_0$ = Center Wavelength
Rin = Input Resistance
L_v = Patch Length Vertical = 17.73 mm
L_h = Patch Length Horizontal = 17.73 mm
L_m =Matching Line Length = 10.42 mm
W_m =Matching Line Width = 1.798 mm
W_f = Feed Line Width = 4.930 mm
L_f = Feed Line Length = 10.15 mm
L_I = Line Length = 19.78 mm
W_I = Line Width = 1.603 mm
H = Substrate Height = 1.6 mm
ε_r = Relative Permittivity = 2.2
tanδ = Loss tangent of the substrate medium = 0.0009

In this planned paper a 3X3 Series-fed micro strip array antenna is designed to attain higher gain, good bandwidth, and input impedance of the antenna array.

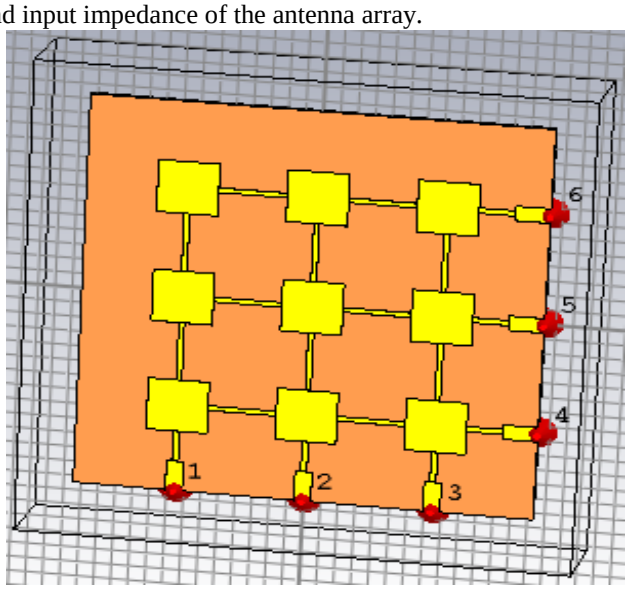

Fig. 5. Designed Series fed 3 by 3 micro strip patch antenna array using CST.

The square patch is selected because it make simpler and analysis and performance estimate. The proposed antenna has stayed premeditated to effort at 5.4 GHz center frequency with 50 Ω input impedance, this future antenna by Rogers RT 5880 loss free material, which has 2.2 relative permittivity (εr = 2.2) and substrate height h is1.6 mm. The vertical and horizontal length of the each patch of antenna array is 17.73 mm. The design starts with the 3X3 Series-fed Square Micro strip antenna with transformer. At that moment, the 3X3 Series-fed MSPA is simulated using the Computer Simulation Technology (CST) Microwave Studio (MWS) simulation software.

IV. SIMULATION RESULTS AND DISCUSSION USING CST

The proposed designed antenna has a moderate gain and a thin bandwidth. The performance bandwidth is mainly restricted by impedance. The resultant plots displayed below are for an array designed for 50 Ω on a substrate with an εr of 2.2 and a height of 1.6 mm wavelengths in the medium. In this paper, 3 by 3 series fed micro strip patch array antenna is designed at 5.4 GHz operating frequency, start frequency or minimum frequency is 5.1 GHz and stop frequency or maximum frequency is 5.7 GHz.

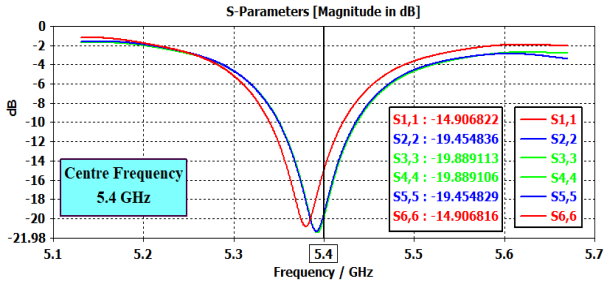

Fig. 6. Reflection coefficient versus frequency for the vertical channel and horizontal channel of proposed antenna.

Figure 6 shows the reflection coefficient versus frequency for the vertical channel and horizontal channel of proposed antenna. The vertical channel ports and horizontal ports return loss values are shown in above figure 6. From figure 6, S11, S22 and S33 are vertical port reflection coefficient or return loss values and S44, S55 and S66 are horizontal port reflection coefficient or return loss values. From the above figure 6, we can observe that S11 & S66; S22 & S55 and S33 & S44 combinations has same reflection coefficient.

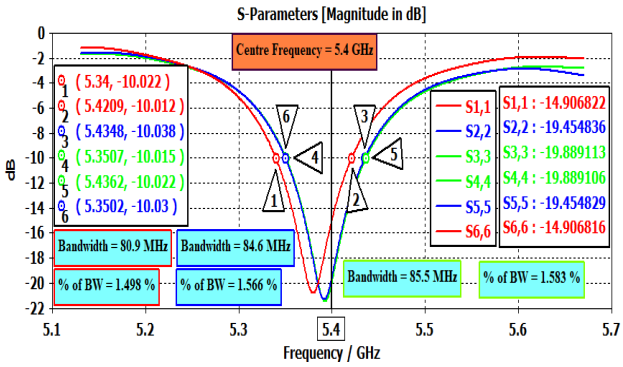

Fig. 7. Bandwidth plot of vertical port and horizontal port of proposed antenna.

Figure 7 shows the bandwidth plot for the vertical channel and horizontal channel of proposed antenna.

The wideband bandwidth antenna can be distinct as the ratio of the upper cut-off frequency to lower cut-off frequency of suitable action.

$$BW_{broadband} = \frac{f_H}{f_L}$$

The thin band bandwidth antenna can be distinct as the % of the frequency variance over the midpoint frequency.

$$BW_{narrowbamd}\ (\%) = [\frac{f_H - f_L}{f_C}] * 100$$

Where, fH is upper frequency, fL is lower frequency and fC is center frequency. The figure 8 shows the VSWR plot of vertical port and horizontal port of future antenna. The figure 9 shows the input impedance versus frequency for the vertical channel and horizontal channel of proposed antenna. The Smith chart plot of series fed 3 by 3 micro strip patch antenna as shown in figure 10.

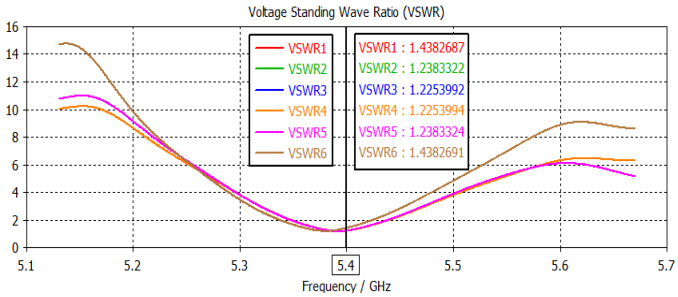

Fig. 8. VSWR plot of vertical port and horizontal port of proposed antenna.

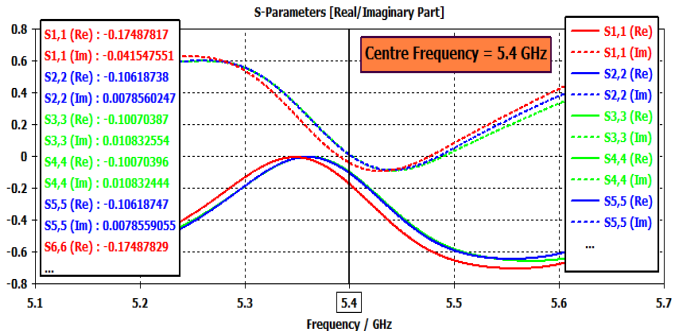

Fig. 9. Input impedance versus frequency for the vertical channel and horizontal channel of proposed antenna.

The 3D far field gain of the series fed 3 by 3 micro strip patch antenna as shown in below figure 11. The 3D far field directivity of the series fed 3 by 3 micro strip patch antenna as shown in below figure 12.

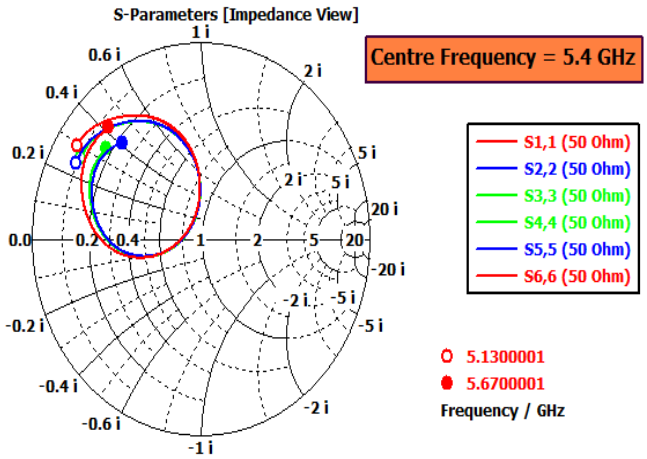

Fig. 10. Smith chart of series fed 3 by 3 micro strip patch antenna.

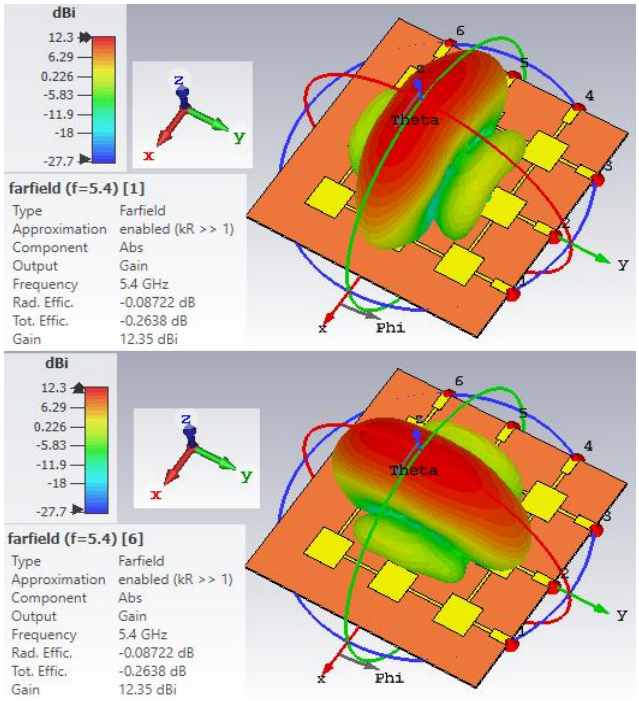

Fig. 11. Gain of the series fed 3 by 3 micro strip patch antenna.

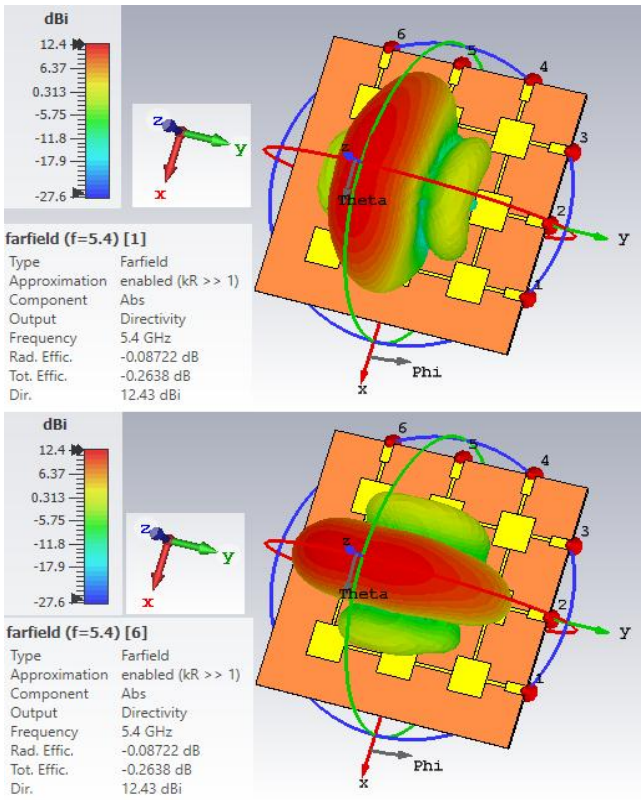

Fig. 12. Directivity of the series fed 3 by 3 micro strip patch antenna.

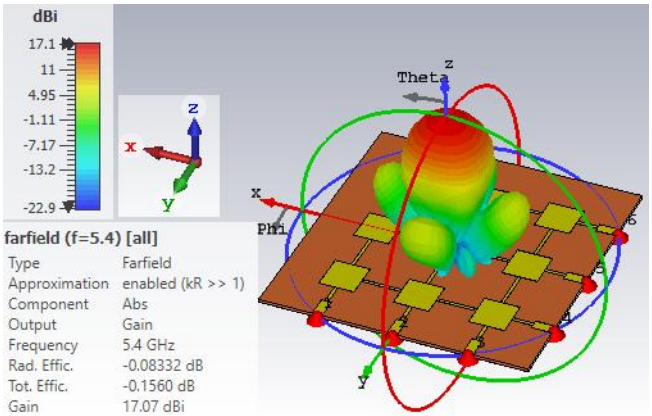

Fig. 13. 3D far field gain pattern of operation method 1 (all ports excited with no phasing) at the center frequency.

Method 1: All ports are excited at the same time with no phasing. An even barrage lobe in the peak direction with low side lobe levels is attained.

Method 2: Only the vertical channel ports are excited and the phasing is adjusted so that the main beam will squint in the Φ = 0° plane. The squint angle is designed for 15°.

Method 3: Only the horizontal channel ports are excited and the phasing is adjusted so that the main beam will squint in the Φ = 90° plane. The squint angle is considered for 15°.

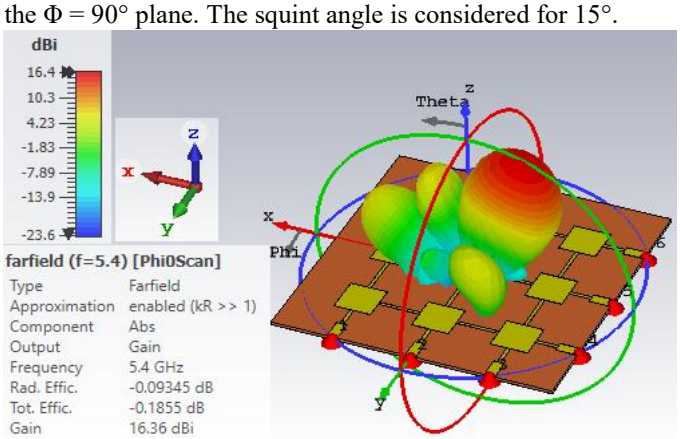

Fig. 14. 3D far field gain pattern of operation method 2 (squint angle in the Φ = 0° plane) at the center frequency.

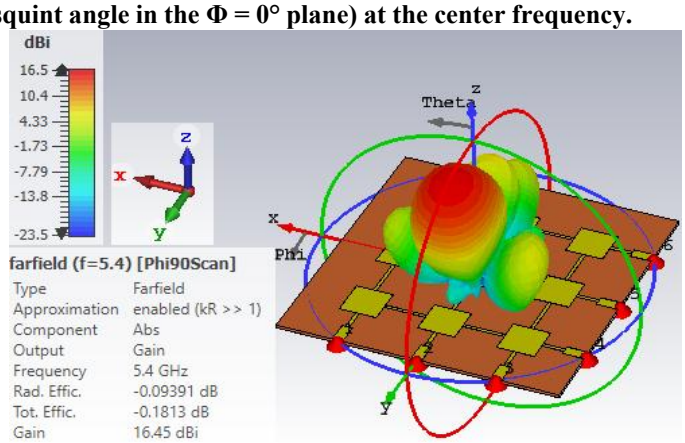

Fig. 15. 3D far field gain pattern of operation method 3 (squint angle in the Φ = 90° plane) at the center frequency.

Parameters		Vertical And Horizontal Ports		
		V1, H3 (1, 6)	V2, H2 (2, 5)	V3, H1 (3, 4)
Return Loss in dB	S_{11},S_{22}, S_{33}	-14.906822	-19.454836	-19.889113
	S_{66},S_{55}, S_{44}	-14.906816	-19.454829	-19.889106
Bandwidth in MHz		80.9	84.6	85.5
Bandwidth in %		1.498	1.566	1.583
VSWR	1, 2, 3	1.4382687	1.2383322	1.2253992
	6, 5, 4	1.4382691	1.2383324	1.2253994
3D Gain in dBi	1, 2, 3	12.35	12.28	12.32
	6, 5, 4	12.35	12.28	12.32
3D Dir. In dBi	1, 2, 3	12.43	12.37	12.41
	6, 5, 4	12.43	12.37	12.41
3D Far Field Gain	Method 1: All ports motivated by zero phase angle 17.07 dBi			
	Method 2: angle of squint in the Φ = 0° plane 16.36 dBi			
	Method 3: In Φ = 90° plane is 16.45 dBi			
3D Far Field Directivity	Method 1: 17.15 dBi			
	Method 2: in the Φ = 0° plane is 16.45 dBi			
	Method 3: in the Φ = 90° plane is 16.55 dBi			

Table 1: Antenna parameters of 3 by 3 series fed patch.

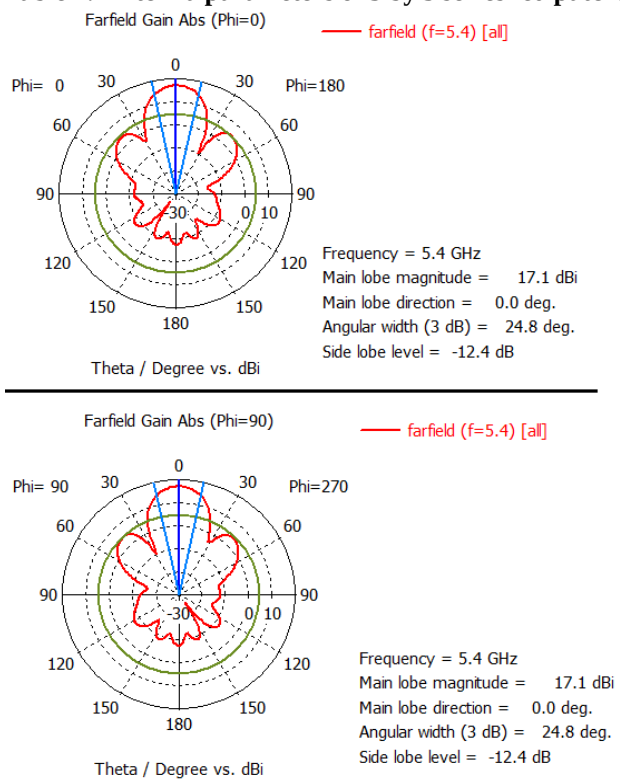

Fig 16: Far field radiation pattern of operation method 1 (all ports excited with no phasing) at the center frequency.

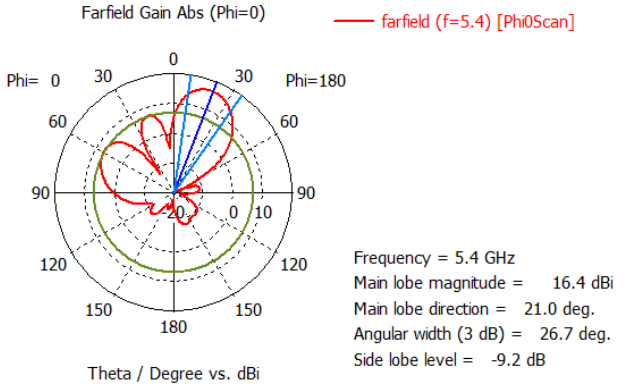

Fig 17: Far field radiation pattern of operation method 2 (squint angle in the Φ = 0° plane) at the center frequency.

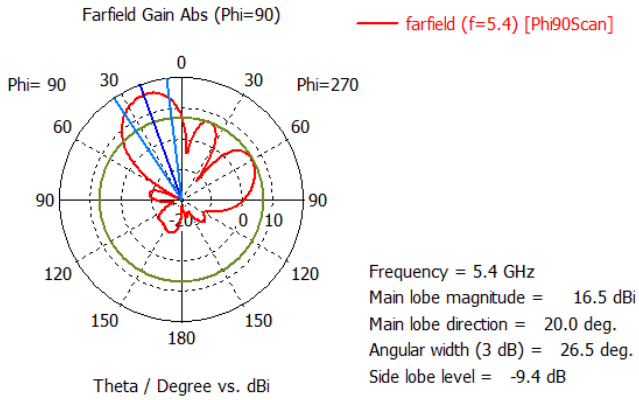

Fig 18: Far field radiation pattern of operation method 3 (squint angle in the Φ = 90° plane) at the center frequency.

The overall 3D gain shape association of operation method 1, 2 and 3 at the center frequency as shown in figure 13, figure 14 and figure 15. The normalized total gain far field patterns comparison of operation method 1, 2 and 3 at the center frequency as shown in figure 16, figure 17 and figure 18.

V.CONCLUSION

A series-fed square micro strip patch antenna has been designed for wireless communication application operating at 5.4 GHz. The 3 by 3 square patch component with series feed supports us to attain the band using Rogers RT 5880.

The proposed designed antenna is suitable to say that 3×3 patch array antenna with series feed network delivers good performance than the other types of arrays, -14.906822 dB return loss at port 1, -19.454836 dB return loss at port 2 and -19.889113 dB return loss at port 3 are achieved at 5.4 GHz. The vertical and horizontal ports bandwidths are 1.498 %, 1.566 % and 1.583 % are achieved at 5.4 GHz.

The square micro strip 3×3 patch array antenna with series feed has the higher directive gain as well as the narrow beam width which appear to be proper measures to design a directive patch antenna for airborne synthetic aperture radar (SAR) applications.

REFERENCES

1. K. Zhao, J. Helander, Zh. Ying, D. Sjöberg, M. Gustafsson and S. He, "mmWave phased array in mobile terminal for 5G mobile system with consideration of hand effect," in IEEE 81th Vehicular Technology Conference (VTC Spring), 2015.
2. C. A. Balanis, Antenna Theory Analysis and Design, 2nd Edition, Wiley, 1997, Chapter 14.
3. Antenna Theory, Analysis and Design, Third Edition by Constantine A. Balanis, Copyright 2005 by John Wiley & Sons, Inc.
4. A. Bisognin, D. Titz, F. Ferrero, C. Luxey, G. Jacquemod, R. Pilard, F. Gianesello, D. Gloria and P. Brachat, "Differential feeding technique for mm-wave series-fed antenna-array," Electron. Lett., vol. 49, no. 15, pp. 918-919, July 2013.
5. U. Chakraborty, A. Kundu, S. K. Chowdhury, and A. K. Bhattacharjee, "Compact Dual-Band Microstrip Antenna for IEEE 802.11a WLAN Applications.
6. V. K. Kothapudi and V. Kumar, "A 6-Port Two-Dimensional 3 x 3 Series-Fed Planar Array Antenna for Dual-Polarized X-Band Airborne Synthetic Aperture Radar Applications," IEEE Access, vol. 6, pp. 12001–12007, Mar. 2018.
7. D. M. Pozar, Microwave Engineering, 2nd edition, John Wiley & Sons, 1998, pp.206-213.
8. O. M. Haraz, A. Elboushi, S. A. Alshebeili, and A. R. Sebak, "Dense dielectric patch array antenna with improved radiation characteristics using EBG ground structure and dielectric superstrate for future 5G cellular networks," IEEE Access, vol. 2, pp. 909-913, 2014.

AUTHORS PROFILE

V. Prakasam received B.Tech degree from JNTUA, M.Tech degree in VLSISD from JNTUK and pursuing p.hD. He is currently an Assistant Professor in the department of Electronics and Communication Engineering at vignan institute of technology and sciences, deshumuki. His research interests Signal processing, image processing, Microwave Engineering and RF Engineering.

P.Sandeep received B.E degree from VTU, Belgaum, M.Tech degree in VLSID from Sathyabama University and pursuing p.hD. He is currently an Assistant Professor in the department of Electronics and Communication Engineering at Vignan institute of technology and sciences, deshumuki. His research interests Signal processing, image processing, Analog Electronics engineering, Low Power and High Speed Systems and VLSI Design.