Research Package Efficiency General Cargo

Ilesaliev Daurenbek, Merganov Avaz

ABSTRACT--- The main reasons of the countries of the former Soviet Union lagging behind economically developed countries in the field of delivery of packaged goods is the lack of feasibility studies and specific organizational measures for the introduction of packaged transportation. Both of these circumstances acquire a special meaning and significance in the conditions of developing a market economy in the country. The purpose of the article is to show that the delivery of packaged goods is influenced by various factors, such as the size of vehicles, type of transport containers, methods of stacking cargo units on transport containers, etc., which are described in the article. The study applies economic criteria and principles of transport logistics and defines the areas of application of transport packaging for the delivery of packaged goods on the basis of specific technical and economic indicators. As a result of the study, the fields of application of transport packaging are determined to depend on the given parameters of packaging cargo. The necessity of a full feasibility study of packaged transportation is shown, as well as the costs of using transport packaging, as well as the cost of forming a transport package should be taken into account.

Keywords: cargo parameters, packing, transport packaging, placement, pallet, transport package, container, transportation conditions.

I. INTRODUCTION

Frequently (up to 55% of the total transport) packaged goods are transported in separate cargo units, which causes the use of heavy manual labor for all participants in the supply chain [1-7, 9-17, 19]. It should also be noted that the delivery of goods by the piece leads to significant losses of goods, theft, increased downtime of vehicles under loading and unloading operations, as well as the loss of commodity form [3, 5].

Numerous studies in the field of packaging have confirmed the effectiveness of the introduction of packaged transport, especially in the presence of multiple transshipments in the supply chain [1-20]. However, to date, studies need to be complemented by a comparison of the means of bagging depending on the different values of the parameters of the transport containers. Therefore, the aim of the study is to find rational transport containers depending on various parameters affecting the final cost of delivery in the supply chain.

II. DETERMINATION OF THE TOTAL COST OF DELIVERY OF 1 PACKAGE OF PACKAGED GOODS

The total cost of delivering a single transport package includes the cost of transportation, the cost of purchasing the required quantity of transport containers, the cost of forming the package, as well as the cost of loading at the point of departure and unloading at the point of destination. The total cost of delivery of 1 packaged package can be determined using the following formula:

$$c = \frac{1}{N_{pck}} \cdot (C_{ctns} + C_{pck} + C_{load} + C_{trans} + Cunload + C_{empty}),$$

rub/pack (1)

where N_{pack} - number of transport packages placed in a universal container, pcs.; C_{ctns} - the cost of transport containers, rub.; C_{pack} - total cost of forming a transport package, rub.; C_{load} - cost of loading transport packages, rub; C_{trans}- cost of transportation of one container, rub.; C_{unload} - cost of unloading of transport packages, rub; C_{empty} - cost of empty container return, rub.

As it was stated above in the article it is necessary to deliver packing cargo in containers depending on various parameters. Similar researches were carried out at the Tashkent Institute of Railway Engineers [2, 7, 9-10]; however, these works did not take into account the distance, the cost of packaging, as well as the cost of forming a transport package depending on the number of packaged goods. Before describing the research methodology, it is necessary to specify what transport packaging is. Transport packaging is a type of packaging to protect goods in consumer packaging from external influences during loading and unloading, transportation and storage. Pallets are transport containers and depend on the design: flat (see Fig. 1, a), rack (see Fig. 1, b) and box (see Fig. 1, c).

Revised Manuscript Received on October 15, 2019

Ilesaliev Daurenbek, PhD of technical science, Associate Professor, Transport Logistics and Service Department, Tashkent Railway Engineering Institute, Tashkent, Uzbekistan
(E-mail: ilesaliev@mail.ru)
Merganov Avaz, Head of Research, Innovation and Training of Scientific and Pedagogical Staff Tashkent Railway Engineering Institute, Tashkent, Uzbekistan
(E-mail: meravaz@gmail.com)

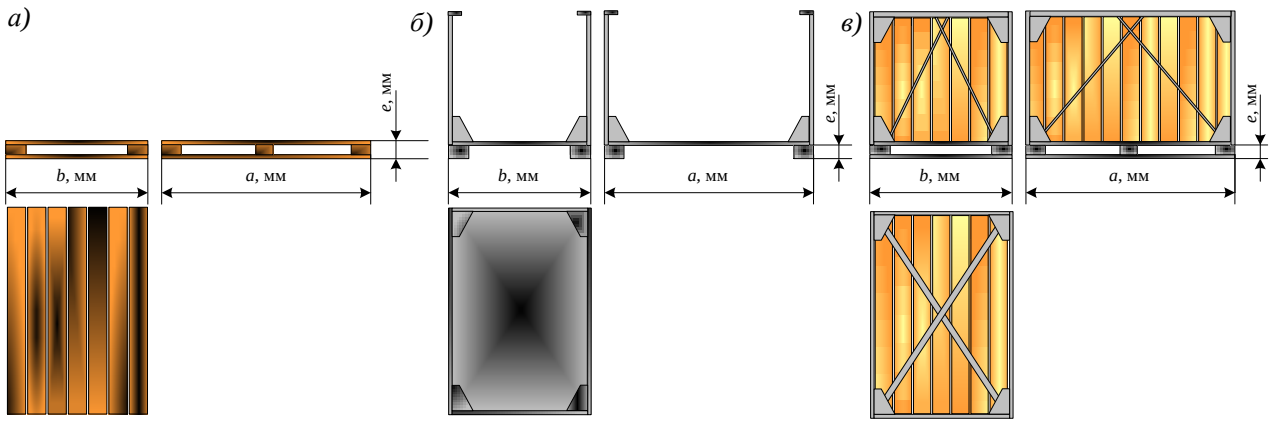

Figure 1: Pallets of different designs: a) flat; b) rack; c) box (a - pallet length, mm; b - pallet width, mm; e - window height for insertion of the load-carrying device, mm)

In this paper, we will compare the pallets between flat and rack pallets, it is caused by the fact that these types of pallets are most widely used. For the accuracy of the study, the pallet parameters are given below:

- A two-layer quadruple flat wooden pallet with overall dimensions of 1200×800×150 mm and a gross weight of 1 ton (Pallet 2P4 - 1.0 D GOST 33757-2016);

- Rack tray with four fixed racks and strapping with overall dimensions of 1240×840×1150 mm and gross weight of 1.25 t. (4RO - 1240×840×1150: 1.25 GOST 9570-2016). Useful overall dimensions of the stand-up pallet are as follows: 1200×800×950.

The cost of transport packaging is given after determining the cost of forming a transport package, as it is necessary to first calculate the number of packaged goods on the pallet.

The cost of forming a transport package depends on the number of packaged goods, pallet parameters, as well as the labor input per person-hour.

Quantities of packaged goods can be determined by existing methods [2, 9, 10, 13-15]. The number of packaged goods on the R_i pallet is calculated according to the following formulas for different methods of packing:

- The long side of the packaging cargoes is stacked along the length of the pallet, laying is not performed:

$$R_1 = \varepsilon\left(\frac{a}{\alpha}\right)\cdot\varepsilon\left(\frac{b}{\beta}\right)\cdot\varepsilon\left(\frac{c}{\delta}\right), \qquad (1)$$

where *a, b, c* - parameters of the transport package, respectively, length, width and height, mm; *α, β, δ* - parameters of packaged goods, respectively length, width and height, mm (dimensions of packaged goods - 400×300×250 mm with a mass of 20 kg).

When using flat pallets:

$$R_1 = \varepsilon\left(\frac{1200}{400}\right)\cdot\varepsilon\left(\frac{800}{300}\right)\cdot\varepsilon\left(\frac{1650}{250}\right) = 3\cdot 2\cdot 6 = 36\ pcs$$

When using rack pallets:

$$R_1 = \varepsilon\left(\frac{1200}{400}\right)\cdot\varepsilon\left(\frac{800}{300}\right)\cdot\varepsilon\left(\frac{950}{250}\right) = 3\cdot 2\cdot 3 = 18\ pcs$$

- the short side of the packaging is placed along the length of the pallet, laying is not performed:

$$R_2 = \varepsilon\left(\frac{a}{\beta}\right)\cdot\varepsilon\left(\frac{b}{\alpha}\right)\cdot\varepsilon\left(\frac{c}{\delta}\right), \qquad (2)$$

When using flat pallets:

$$R_1 = \varepsilon\left(\frac{1200}{300}\right)\cdot\varepsilon\left(\frac{800}{400}\right)\cdot\varepsilon\left(\frac{1650}{228}\right) = 4\cdot 2\cdot 7 = 56\ pcs$$

When using rack pallets:

$$R_1 = \varepsilon\left(\frac{1200}{300}\right)\cdot\varepsilon\left(\frac{800}{400}\right)\cdot\varepsilon\left(\frac{950}{228}\right) = 4\cdot 2\cdot 4 = 32\ pcs$$

After calculating the number of packaged goods on the pallet, for each *i*-th method is the selected method of laying, which ensures maximum filling of the transport package:

$$R_{init} = \max_{i=1\ldots 6}\{R_i\}, \qquad (3)$$

The total weight of packaged goods in the transport package, considering the weight of the pallet, is determined by the following formula

$$G = R_{init}\cdot g + g_{pall} \le q_{pall}, \qquad (4)$$

where g is the weight of the packaged goods, kg; g_{pall} is the weight of the pallet, kg; q_{pall} is the gross weight of the pallet, kg

When using flat pallets:

$$G = 56\cdot 20 + 40 \le 1250\ kg$$

$$1160\ kg \le 1250\ kg$$

When using rack pallets:

$$G = 32\cdot 20 + 76 \le 1250\ kg\ \ 716\ kg \le 1250\ kg$$

The cost of forming one transport package is determined as follows:

$$C_{pck} = \frac{w\cdot wage\cdot 1{,}36}{T\cdot t_{shift}} \qquad (6)$$

where w - labor intensity of formation of one transport package, man-hour/package; 1,36 - coefficient of contributions to the pension fund and social insurance fund; T - the average number of working days in a month, day/month; t_{shift} - duration of working shift, hour/day.

The labor intensity of one transport package can be determined by the formula:

$$w = \frac{R_i \cdot t_{layer} \cdot n_{loaders}}{3600}, man-hour/pack \quad (7)$$

where t_{layer} - average time of laying one unit of cargo, sec; $n_{loaders}$ - number of loaders stacked on a pallet, people; 3600 - number of seconds per hour, sec.

When using flat pallets:

$$w = \frac{56 \cdot 20 \cdot 2}{3600} \approx 0{,}62 \ man-hour/pack$$

$$C_{pck} = \frac{0{,}62 \cdot 20000 \cdot 1{,}36}{26 \cdot 8} \approx 81 \ hour/pack$$

When using rack pallets:

$$w = \frac{32 \cdot 20 \cdot 2}{3600} \approx 0{,}35 \ man-hour/pack$$

$$C_{pack} = \frac{0{,}35 \cdot 20000 \cdot 1{,}36}{26 \cdot 8} \approx 46 \ rub/pack$$

As can be seen from the results of the costing of a transport package per package formed with the help of a rack pallet is 55% cheaper than with the use of a flat pallet, but the results in determining the total cost may be similar.

The cost of packaging is based on the total number of transport packets to be placed in the container, which can be determined by the following formula:

$$N_{pck} = \left[\varepsilon\left(\frac{L}{a+\lambda}\right) \cdot n_{row} + \varepsilon\left(\frac{L}{b+\lambda}\right) \right] \cdot \varepsilon\left(\frac{H}{C_p}\right), \quad (8)$$

where L is the useful length of the container, mm; H is the useful height of the container, mm; a is the length of the transport package, mm; b is the width of the transport package, mm; Cp is the height of the transport package, mm (Transport packages with the height of more than 1800 mm are not allowed to be loaded (GOST 23285-78)); λ - conditional technological gap for possible irregularities in the adjacent planes, mm; strand - number of rows laid along the length of the container (strand = 1); ε(...) - logical operation of rounding the result down to a whole number.

When using flat pallets:

$$N_{pck} = \left[\varepsilon\left(\frac{5898}{1200+40}\right) \cdot 1row + \varepsilon\left(\frac{5898}{800+40}\right) \right] \cdot \varepsilon\left(\frac{2393}{1800}\right) = 11 \ pack$$

When using rack pallets:

$$N_{pck} = \left[\varepsilon\left(\frac{5898}{1240+40}\right) \cdot 1row + \varepsilon\left(\frac{5898}{840+40}\right) \right] \cdot \varepsilon\left(\frac{2393}{1150}\right) = 20 \ pack$$

Table 1 compares the container capacity with the different parameters of the transport package provided that $G \cdot N_{pck} \leq q_{cont}$ content (Gross Container Weight) is present.

Table 1. Comparison of container capacity with different parameters transport package

Transport package formed by means of a pallet	Number of units on the pallet, pcs.	Weight of transport package, kg.	The total number of units in the container, pcs.	Total weight of the transport batch, kg.
flat	56	1160	616	12320
rack-mounted	32	716	640	12800

As can be seen from Table 1, when using racks of pallets, the capacity of packaged goods in the container is to some extent greater, or rather, at the given parameters of the cargo by 480 cargo units more.

The results of comparing the container capacity with different parameters of the transport package are shown in Table 2.

Table 2. Comparison of container capacity with different parameters transport package

Transport package formed by means of a pallet	Total number of transport packages placed in one container	Cost of one pallet, rub.	The total cost of pallets, RUB
flat	11	350	3850
rack-mounted	20	1700	34000

Transport packages can be overloaded in a warehouse, in an open area, through a covered loading bay, by means of a loader, as shown in Figure 2.

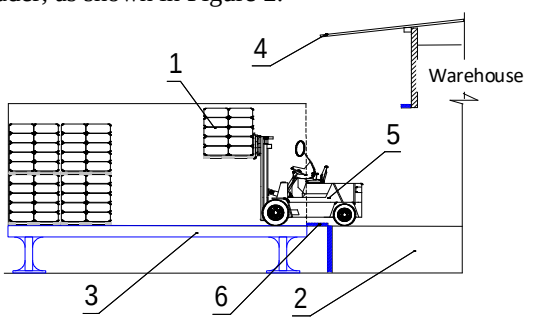

Figure 2: Technology of loading or unloading of transport packages into a container: 1 - packing and packing cargo; 2 - loading ramp; 3 - supporting ramp for a container; 4 - canopy; 5 - electric loader; 6 - transshipment bridge.

The cost of loading and unloading works was determined by the method [12]. The cost of loading (unloading) one flat or rack pallet is determined depending on the number of packages placed in the container.

$$C_{load} = \frac{w_{load} \cdot wage \cdot 1{,}36}{T \cdot t_{shift}}, rub/pack \quad (9)$$

where w_{load} is the time required to load or unload a single transport package, man-hour/pack;

Labor input of loading or unloading of one transport package is defined as follows:

$$w = \frac{N_{pack} \cdot t_{overload} \cdot n_{flifter}}{3600}, man-hour/pack \quad (10)$$

where $t_{overload}$ - average overload time of one transport package, sec; $n_{flifter}$ - number of forklift truck drivers, people; 3600 - number of seconds per hour, sec.

When using flat pallets:

$$w = \frac{11 \cdot 180 \cdot 1}{3600} = 0{,}55\ man-hour/pack$$

$$C_{load} = \frac{0{,}55 \cdot 25000 \cdot 1{,}36}{26 \cdot 8} = 90\, rub/pack$$

When using rack pallets:

$$w = \frac{20 \cdot 180 \cdot 1}{3600} = 1\ man-hour/pack$$

$$C_{load} = \frac{1 \cdot 25000 \cdot 1{,}36}{26 \cdot 8} = 165\, rub/pack$$

In determining the total cost of containerized cargo delivery, loading and unloading costs doubled.

The cost of transporting one standard pallet or box pallet is determined depending on the cost of transporting the container and the number of transport packages in one container, as well as depending on the distance of transportation. The cost of transportation was calculated according to Price List 10-01 (Tariff Manual No. 1, Part II) with indexation coefficient 4,237, as it was established on 30.10.2018. (Order of the Federal Antimonopoly Service), according to Scheme 93 - payment for transportation of cargoes in universal own (leased) containers (per one container). Return of empty universal containers in own (leased) wagons was calculated according to clause 2.11.17 of the Price List 10-01 (Tariff Manual No. 1, Part II) with the coefficient 0.6. The results of calculation of transportation cost per transport package are shown in Table 3.

Table 3: Cost of transporting a transport package formed by one flat and rack pallet

Distance of transportation, km.	Cost of container transportation including the return, RUB	Quantity in one container		Transportation costs, RUB	
		flat pallet	rack pallet	one flat pallet	one rack pallet
241-260	20523,4	11	20	1865,8	1026,2
481-510	25807,1	11	20	2346,1	1290,4
721-760	31042,6	11	20	2822,1	1552,1
961-1000	37941,1	11	20	3449,2	1897,1
1451-1500	45469,5	11	20	4133,6	2273,5
1901-2000	54246,5	11	20	4931,5	2712,3

Table 3 shows that the cost of transportation increases with the distance travelled. This is understandable and does not require additional explanation.

III. DISCUSSION OF THE RESULTS

As discussed above, the total cost of delivering a transport package by flat or rack-mounted containers includes the cost of transport, the cost of the transport package itself, the cost of bundling and the cost of loading at the point of departure and unloading at the point of destination. The results of the calculations are shown in Table 4.

Table 4: Total cost of transporting one flat and one rack pallet

Transport package formed by means of a pallet	Logistic Operations	The distance of transportation, km.					
		241-260	481-510	721-760	961-1000	1451-1500	1901-2000
Flat	Cost of transportation of one package, rub.	1865,8	2346,1	2822,1	3449,2	4133,6	4931,5
	Cost of one container, rub.	350	350	350	350	350	350
	Cost of one transport package	81	81	81	81	81	81
	Cost of loading and unloading of one package, RUB	90	90	90	90	90	90
	Total cost of transportation of one package, RUB	2386,8	2867,1	3343,1	3970,2	4654,6	5452,5
Rack	Cost of transportation of one package, rub.	1026,2	1290,4	1552,1	1897,1	2273,5	2712,3
	Cost of one container, rub.	1700	1700	1700	1700	1700	1700
	Cost of one transport package	46	46	46	46	46	46
	Cost of loading and unloading of one package, RUB	165	165	165	165	165	165
	Total cost of transportation of one package, RUB	2937,2	3201,4	3463,1	3808,1	4184,5	4623,3

This table shows the total cost of delivery of 1 transport package formed with the help of a flat pallet is cheaper than with the use of rack pallets. This is clearly shown in the graphs in Figure 3, based on the data in Table 4.

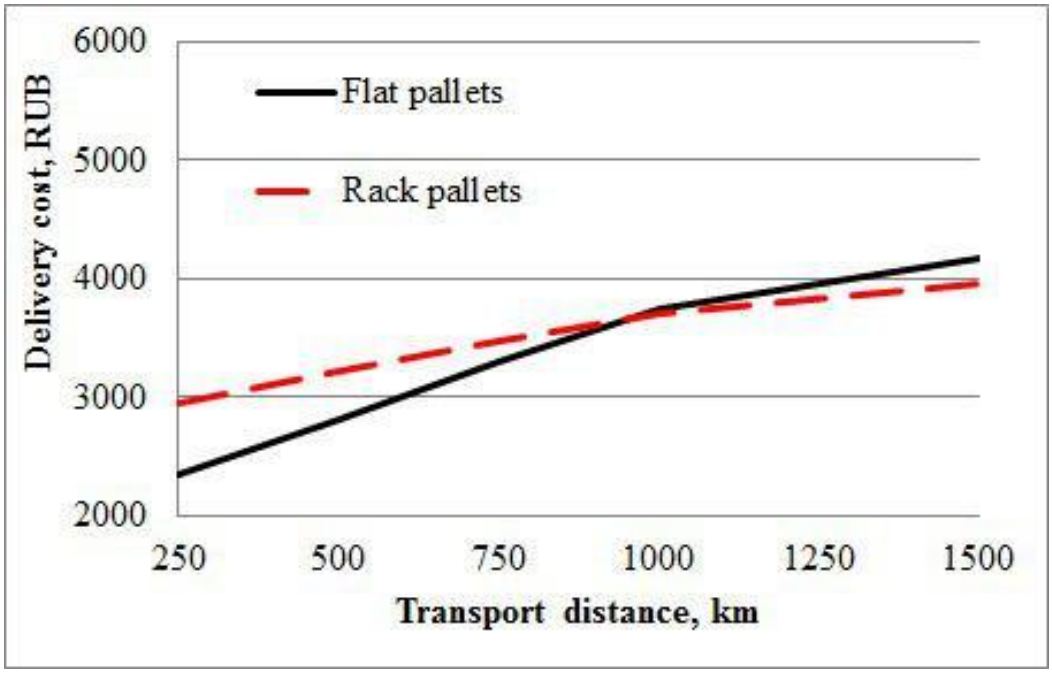

Figure 3: Dependence of the cost of delivery of 1 transport package on the distance of transportation

Thus, it is evident from the graphs in Figure 3 that the most preferable type of transport container for distances up to 999 km is a flat pallet, and the use of rack pallets is advisable for transportation at a distance of 1000 km or more.

IV. CONCLUSION

In the conducted researches the expenses for transport containers were taken into account, as in the majority of researches it is supposed that transport containers are multi-turned and belong to other company (transport or forwarding enterprise). In this regard, the costs of using transport packaging are taken into account in this study.

REFERENCES

1. Barsuk, I.V. Packaging standardization and the parcel stacking algorithm at the multiple parcel heights (Barsuk, I.V.) // T-SOMM: Telecommunications and transport. - 2013. - T. 7 № 10. - p. 14-16.
2. Ilesaliyev, D.I. Analysis of the influence of the transport containers on the transportation conditions (Ilesaliyev, D.I) // Transport of the Asia-Pacific region. - – 2017. - Issue. 1. - № 10. - p.9-13.
3. Ilesaliyev, D.I. Analysis of the existing methods of transshipment of the packaged goods on railway transport / D.I. Ilesaliyev, E.K. Korovyakovsky // Modern problems of the transport complex of Russia. –2015. - Issue. 1. - № 6. - p. 38-42.
4. Ilesaliyev, D.I. To the substantiation of the parameters of the capacity of the covered unit cargo warehouse / D.I. Ilesaliyev // Credo Experto: transport, society, education, language. - 2017. - № 4. - p. 70-79.
5. Ilesaliyev D.I. Justification of the method of processing tare and piece cargoes at transshipment warehouses in supply chains: autoref. - St. Petersburg, 2016. - 16 p.
6. Ilesaliyev, D.I. Transportation of export-import cargo in the Republic of Uzbekistan / D.I. Ilesaliyev, E.K. Korovyakovsky, O.B. Malikov // News of St. Petersburg University of Railway Transport. - 2014. - № 3 (39). - p. 11-17.
7. Ilesaliyev D.I. Rational use of the load-carrying capacity and capacity of covered wagons for transportation of packed goods // D.I. Ilesaliyev // Scientific and Technical Bulletin of Bryansk State University. - – 2018. - № 2. - p. 107-113.
8. Ilesaliyev, D.I. Recommendations on organization and management of the warehouse from A to Z / D.I. Ilesaliyev // Logistics. - 2018. - Issue. 1. - № 134. - p. 18-20.
9. Ilesaliyev, D.I. Increase in the mass of the consignment of goods due to a rational choice of transport packaging / D.I. Ilesaliyev // Scientific and Technical Bulletin of Bryansk State University. - 2018. - № 1. - p. 97-104.
10. Korovyakovsky E.K. To the research of a question of a choice of parameters of transport packages at the transportation of fruits and vegetables / E.K. Korovyakovsky, D.I. Ilesaliyev // Modern problems of a transport complex of Russia. - 2017. - Volume 7. - № 1. - p. 4-12.
11. Kurilov, E.G. Some questions of the economic efficiency of the bulk cargo transportation in containers (in Russian) / E.G. Kurilov, O.B. Malikov, D.I. Ilesaliyev // News of St. Petersburg University of Railway Transport. - 2016. - Vol. 13. - Issue. 4. - № 49. - p. 53-58.
12. Malikov O.B. Logistics of the packaged transportation of the piece cargoes / O.B. Malikov, E.K. Korovyakovsky, D.I. Ilesaliyev // News of St. Petersburg University of Railway Transport. - 2014. - № 4 (41). - p. 51-57.
13. Malikov O.B. Development of packet transportation on pallets / O.B. Malikov // Technical sciences: theory and practice. Proceedings of the international scientific conference. - M.: International Center for Research Projects, 26-28 June 2014 - p. 79-86.
14. Merganov A.M. Method of consolidation of freight transport units. Part II / A.M. Merganov // Solloquium-journal. - 2019 - Issue. 6. - № 30. - p. 33-37
15. Merganov A.M. Method of consolidation of freight transport units. Part I / A.M. Merganov // Solloquium-journal. - 2019 - Issue. 6. - № 30. - p. 27-33
16. Ostrovskiy A.M. Factors influencing the choice of the method of cargo transportation / A.M. Ostrovskiy, E.M. Bondarenko, E.V. Bondarenko // New science: from idea to result. - 2016. - № 11-2. - p. 134-137.
17. Sukhova, I.A. Packaging as a factor of the perishable cargo transportation quality improvement / I.A. Sukhova, D.A. Krasnikova // Scientific thought. - 2015. - № 2. - p. 39-41.
18. Tiverovskiy V.I. Innovations in logistics abroad / V.I. Tiverovskiy // Transport Bulletin. - 2011. - № 10. - p. 33-38.
19. Firsova S.Yu. Reduction of transport costs due to the choice of the optimal type of pallet for transportation of construction cargoes / S.Yu. Firsova, A.V. Kulikova // Energy and resource saving: industry and transport. - 2013. - T 6. № 10 (113). - p. 86-88.
20. Firsova S.Yu. The technology of choosing the optimal type of rolling stock when transporting the fruit and vegetable products from the collection points to the processing enterprises / S.Yu. Firsova, A.V. Kulikov, B.S. Sovetbekov // Vestnik Kyrgyz-Russian Slavonic University. - 2014. - T 14. № 12. - p. 199-201.