A Research on Power Quality Enhancement and Energy Management of Solar-Wind Hybrid Smart Grid System

Rambabu yerra, R. Hariharan

ABSTRACT--- A solar-wind hybrid system plays a key role in power generation and becomes very important role to smart grid power systems. Also, the wind-solar hybrid energy storage control systems in coordination of energy markets, made economical to the electrical power system power system.

Hybrid renewable energy system connected micro-grid consists of significant identification; in view of solve the rising electrical energy demand. In addition to this the problem of harmonic distortion in micro-grids due to the non-linear loads is an indispensable topic of study. Also, it is very significant for the better understanding of the power quality impacts in micro-grids. This paper presents detail analysis of different control techniques for optimization of harmonics in smart grid system and enhancement in power quality of the smart grid system. The performance of the control system is verified through the MATLAB simulation of the hybrid solar-wind electrical energy system.

Keywords- power quality, Smart Grid, non conventional Renewable Energy system

I. INTRODUCTION

Renewable energy sources which are wind- solar are paying concentration many researchers' communities throughout the globe, the increasing of electrical energy demand, the cost of the energy is high, and activities are increasing concerns on alternative power studies in communities.

The most of the electrical energy is utilized by conventional energy sources which are burning fossil fuels due to pollute the environment causing global warming this causes serious problems, so this condition is not suitable for human beings survival, in fact 80-85 percent of electrical energy supply to the load demand after some years these resources will be not available in the earth next alternate resources are necessary [1] .To overcome the conventional power generation resources issues and save the environment from the burning of fossil fuels, the solution is approach the green energy or pollution free systems which are renewable power generation sources like solar, wind, tidal and fuel cell, may be these are generating small amount of energy but its pollution free energy it is not creating any harm to environment. Increase the green energy technology enhances the power generation capacity. there are two types of non-conventional energy sources which are standalone system and grid connected systems, stand alone system can generate the power for local utility purpose, grid connected systems can generate the electrical power and integrate to the local grid supply the local loads, hybrid solar- wind systems are most important renewable energy sources to generate the electrical energy and supply to local peak loads. For continuous power supply the battery systems are most essential.

II. HYBRID SOLAR-WIND POWER SYSTEM.

The hybrid energy system consist of solar and wind configuration, distribution system, loads, renewable energy systems, power converters, [2] Hybrid power systems might also consist of biomass or hydroelectric generators. A diagram of the possibilities for hybrid power systems is explained in the figure below.

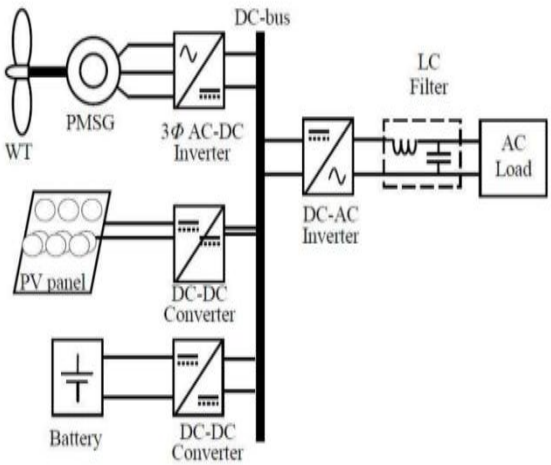

Fig.1.Proposed Hybrid System

Solar Energy Control system.

The solar system is an excellent option in remote area for small level of electrical power generation. The solar system contains a p-n semiconductor junction configuration, which converts photon energy into DC current.

Maximum power point tracking (MPPT) is a control technique this can be used for the maximum power tracking from the solar and wind systems [3]. For solar PV systems is integrated to MPPT algorithm is allows the controller for the optimal voltage and current from the PV module. Perturb & Observe (P&O) is the most extensively used among all the

Revised Manuscript Received on October 15, 2019

Rambabu yerra, Research Scholar, Saveetha School of Engineering, SIMATS, Chennai, Tamilnadu, India.
(E-mail:y.rambabu.mtech@gmail.com)
Dr. R. Hariharan, Associate Professor, Saveetha School of Engineering, SIMATS, Chennai, Tamilnadu, India.
(E-mail: harinov22@gmail.com)

existing MPPT techniques, in the MPPT algorithm the working voltage of PV array is perturbed by small growth and the equivalent change in power due to that is used to estimate the maximum power point (MPP). At the MPP, the derivative of the power with respect to the voltage should be zero.

This method is the most popular because of its simplicity and low cost, ease to implement and its operation is doesn‘t rely on the understanding of the PV characteristics. One of the main drawbacks of this algorithm is that it has a poor performance under speedy change of irradiation. One more technique is that incremental conductance method, which is based on comparing the changes in voltage and current. This algorithm calculates the incremental change in current and voltage.

As the control decision is based on two distinct variables, incremental conductance method has good robustness to measurement noise compared to the P&O method. Another MPPT method named constant voltage MPPT algorithm relies on the current-voltage curve of the PV array. In the simplest from, the open circuit voltage has a linear relation with MPP. The constant of proportionality is selected between 0.78 and 0.92. As this is an estimation technique based on PV cells under uniform condition, it is unable to accurately find MPP location under non-uniform conditions. A variety of artificial intelligence based MPPT techniques have been projected in different papers. A fuzzy logic based MPPT is projected. Artificial Neural Network provides a mechanism to predict the MPP based on PV systems experience in environmental conditions.

Wind Energy Control.

The wind energy conversion system (WECS) is to control the speed of the wind turbine system. The control system is essential to operate the wind turbine at rated wind speed to maintain a desired voltage level. Speed control of the turbine is also most important to ensure the safety of the WECS, converters, transformers and loads. A rotor speed estimation based non-linear speed controller is presented [3].

The projected control system has two parts, a machine side control and a grid side control. Machine side converter control is used to run the wind turbine in maximum power point (MPP) for maximum power generation. Another approach uses a proportional-integral-derivative (PID) based pitch regulation to control the speed. A transfer function of wind turbine is derived to apply the PID controller. This PID controller is designed considering the non-linearity and the step reaction of the wind turbine.

The speed control of the wind turbine is controlling the two components of the stator current. Adaptive sliding mode controller is another method to solve this problem. This adaptation strategy consists of update the sliding gain and the turbine torque. The adaptation algorithms for the sliding gain and the torque estimation are carried out using the sliding surface to overcome the drawbacks of predictable sliding mode control.

III. HYBTRID ENERGY MAGAMENT SYSTEM

Distributed power generation systems based on renewable resources like wind, solar are gaining popularity these days. An energy management system is necessary to keep the energy balance of this hybrid system. The objective of the energy management system is to help maintain the power balance of the hybrid system. Improves the battery‘s charge & discharge position while energy conversion, the following conditions must be satisfied SOC min ≤ SOC ≤ SOC max In case when the battery is fully charged, the excess power can be dumped. This case has not been studied due to limited resources of the current experimental system (no availability of a dump load with automatic switches); however, it can be added to the ESS algorithm in future work. As the output load is resistive its power can be maintained by maintaining DC voltage via the DC-Link voltage controller mentioned above.

If the produced power is more than the demand DC-Link voltage goes up. So battery is charged with excess power and load power remains constant. On the other hand, if the generated power is less than the demand DC Link voltage goes down. So battery discharges required power to the load and load power + _ Σ PI V*DC I*bat + _ Σ PI PWM Imax _ + + _ Vbat VDC Ibat d1 d2 Imin 35 remains constant. The energy management of renewable sources, the battery and the load demand is illustrated in the flowchart of Fig. 2

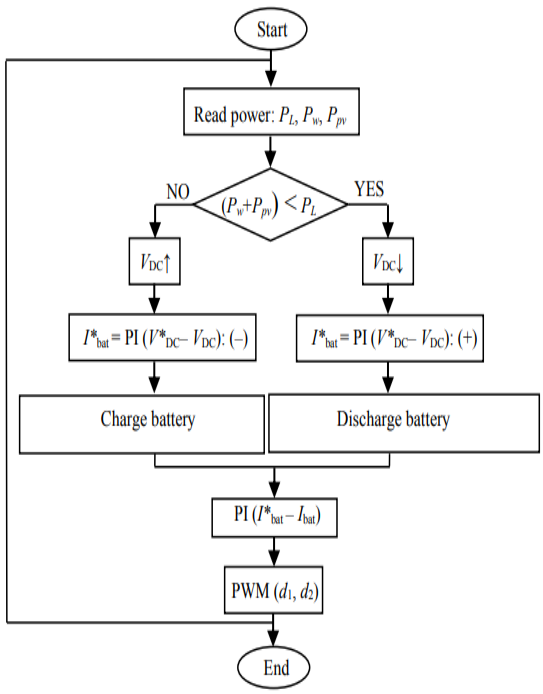

Fig2.Flow Chart for Energy Management

IV. CONCEPT OF SMART GRID SYSTEM & RESULTS

The smart grid is an electric grid which consists of different configurations the following electric generators, transmission and distribution operators, electrical consumers communicate and work with each other to improve the efficiency and reliability of the smart grid [4].

The smart grid transfers electric energy to consumers using two-way digital technology to allocate the more efficient management of consumers' last part uses of electric power and also the further efficient use of the smart grid to recognize and correct supply demand-imbalances instantly and sense the faults in a "self-healing" procedure that improves service excellence, enhancing reliability, and reduces costs of the smart grid.

The smart grid is further installing smart meters an information technology to the electric smart grid, will expand several applications that use devices, net-working and communications technology, control and data supervision systems [17].

Fig-3: Smart Grid.

V. PROBLEMS WITH THE CURRENT GRID

An electrical smart grid is an interrelated network to transfer Electric power from suppliers to users. The electrical smart grid has evolved from a limited system that service a very particular geographic location to a wider, extensive network that integrated multiple locations. The smart grid is a difficult system that delivers electric power produced at power stations to substations via transmission lines, and then to a selection of consumers throughout the nation through distribution lines.

This smart grid system is developed through integration local grids to form additional tough and better networks. This methodology worked in the past, development has overburden the grid in high demand locations. As a result of this increase in demand, the grid often experience interruptions in electric service. Many of these interruptions happen due to problems at the distribution point .

The Service interruptions present the inefficiencies of existing grid networks and high light the terrible need to modernize the electric grid so that it can be responded to improve electric power demands and shifts in generation sources. While construction new generation stations and transmission and distribution lines.

VI. POWER QUALITY PROBLEMS

Electrical power that describe power quality issues are Interruptions Swells Voltage sags, Harmonic resonance Voltage variations, Notching, Inter harmonics, , Noise, Spikes (Voltage), Common mode noise, Impulse, Crest factor, THD, Ground loops, Ground noise, Voltage dip, Electromagnetic compatibility, Voltage regulation, Blink, Oscillatory transient [5].

VII. CONCLUSION

Reviewed the entire related research proposal, in all the research papers implemented latest smart grid technology to develop the renewable energy systems which are generating electric energy with power quality. Energy management concept is useful to supply the uninterrupted power to the loads along with storage system technologies. The system has capability to adding flexibility, controlling back-up it is very important factor to supply load demand.

REFERENCES

1. DVR based power quality improvement in a hybrid System. ISSN (ONLINE): 2395-6151, VOLUME-2, ISSUE-4, 2016
2. Energy Management and Control Systems for Hybrid Wind-Solar Energy System with Battery Storage. Khandker Tawfique Ahmed.
3. FACTS Based Stabilization for Smart Grid Applications. Adel M. Sharaf, Foad H. Gandoman.
4. Smart Grids & smart grid technologies in India Sayantan Chakraborty1, Anirban Chowdhury2, Sobhan Chakraborty3
5. Smart Grids & smart grid technologies in India. Sheetal Munje1