Innovative Detection of Isolation and Recombination Technique with Micro Grid

N.Sirisha, Sumati

Abstract—An innovative technique of the Unified power quality conditioner for the location, control and integration in the Distributed generation which is based on autonomous and grid connected µg system is proposed and simulated. At Point of Common Coupling, DG converters that has storage andshunt part of APFof UPQC are connected. Before the PCC, the grid and the series part of the UPQC APFare connected in series. Also the DC link is integrated with energy storage. As a secondary mode of control, an innovative technique is introduced in UPQC for the detection of isolation and recombination inµg. Henceforth, it is described as innovative detection of isolation and recombination technique. In this system an effectual method is used for proper functioning of the recombination and isolation detection. Along with the increase in the quality of the power in terms of voltage sag/swell, compensation of the reactive power and harmonics in recombination mode, additionally it compensates voltage interruption over normal UPQC and also DG converter remains connected during the conditions of disturbances in voltage and also phase jump. The performance of the UPQC is simulated and results are analysed.

Index terms – Distributed generation (DG), Micro grid (µg), Power quality, Innovative isolation detection & Recombination (IDR), Unified Power Quality conditioner (UPQC), Smart grid.

I. INTRODUCTION

The integration of distributed generation (DG), i.e., micro generation integration with unified power quality conditioner (UPQC) is successful and has some challenging issues which are primarily due to a) controlling the complexity of active power transfer capability, b) compensation of non-active power during islanded mode of operation, c) enhancement of capacity in integrated way . For unified power transfer between the isolated mode and also mode ofgrid connectionthat involves various changes in the operations like switching of voltage and current mode of control between them, robustness operation between the delay of recombination and isolation detection. [2,3]

Obviously, there is further increase in complexity for controlling the µg system. With an objective to improve the flexibility in operation and for the improvement of quality of power with µg and grid connected systems. An integration system of UPQC placement is proposed [3], and is termed UPQC µg.

For the maintenance of operation in both isolated mode and the recombination mode with UPQC, the connections between µg and UPQC as stated in [3], is implemented with intelligent isolation and novel technique of recombination with number of switches reduced which ensures seamless operation of Mg without its interruption, therefore it is known as UPQCµg -IDR. The benefits which are offered with the proposed UPQC µg-IDR with conventional UPQCas follows below

a) It compensates both voltage sag/interruption/swell, non-active current in the mode of interconnection. Even under distortion conditions of system, the DG converter is connected. It also improves operational tractability of DG converters or µg, which is explained in the next sections.

b) The APFis the shunt part of UPQC, which maintain association during islanded mode and also can compensate harmonic power (QH) , non-active reactive power of load.

c) In both the islanded and interconnected mode of operation Mg, active power is supplied to load. Therefore the controlling complexity of DG converters is reduced.

d) As secondary controlling of operation recombination technique and isolation detection are proposed. By using secondary control communication between µg and UPQC is provided. Isolation detection and the recombination feature may not be required by the DG converters in the control system.

e) UPQC-µg IDR can also works incondition of phase difference/ phase jump within the limits ofµgand grid , and also have total controlling on isolation and detection and also recombination of continuous and stable operation of µgwith best quality service of power

The organization of the paperis followed as, The proposed system working principle is described in the Section II. Basing on this, issues of the design and selection of the ratings has been discussed in the section III. Detection of isolation and recombination technique are discussed in the section IV. The performance of the simulation is mentioned in the last section.

II. WORKING PRINCIPLE

The proposed technique of UPQCµg-IDRwith grid connected and DG integrated µg with grid and two breaker switches are used for isolation and also reconnection of the micro –grid to the grid as directions given by secondary control of UPQC µg-IDR. The principle and working during both modes of isolation and recombination are shown in the Figure. 1(b) and 1(c). The working of the UPQC µg-IDR will be divided into two methods of operation.

Revised Manuscript Received on October 15, 2019

N.Sirisha, Research Scholar, EEE Department, JNTUK, Kakinada, Andhra Pradesh, India.

Sumati, Associate Professor, EEE Department, JNTUK, Kakinada, Andhra Pradesh, India.

1. Mode of Interconnected operation

In the above mode of operation as given in Figure.1(b),

A)The load, storage and active power to the grid which is fundamental is delivered by the DG source. B)For the maintenance of THD within IEEE standards and limits, shunt APF is used tocompensate the harmonic (QH) and reactive power of the non-linear load.

C)The APFseis used to compensate voltage swell/sag/interruption of the active power from storage or grid. As any sort of the disturbances in voltage at the PCC cannot be sensed by DG converters, therefore under any circumstances they remain connected.

D)If there is any black out or interruption occurs, the Distribution Generation converter receives a signal from UPQC in a specified time.

2. Mode of Isolating operation:

In the casementioned in Figure.1(c), the following occurs:

A)When there is a failure in grid, APFse is disconnected and Distribution Generation converter maintains voltage at PCC and remain connected in the system.

B)For the maintenance of undistorted currents at PCC, non-active power is compensated by APFshof linear and non-linear loads.

C) Distribution Generation converterthat has storage and delivers active power only and no necessity of disconnecting it from the system.

D) Once grid power is available, the APFseis reconnected to the system.

The switching mechanism in controller design is shown inFigure.1(a),(b),(c), UPQC micro-grid –IDR needs two switches when compared with UPQC µgin which four switches are required.

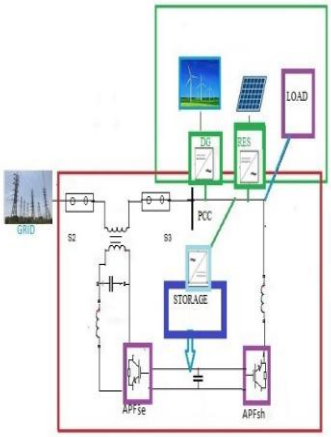

Figure.1.(a)

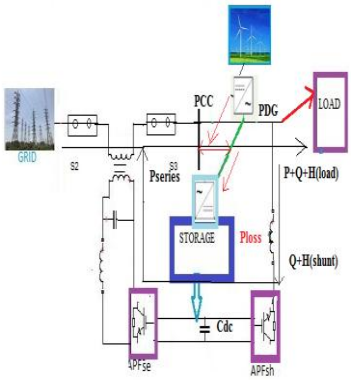

Figure.1.(b)

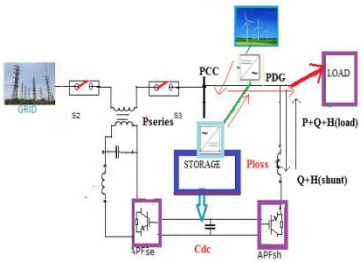

Figure.1.(c)

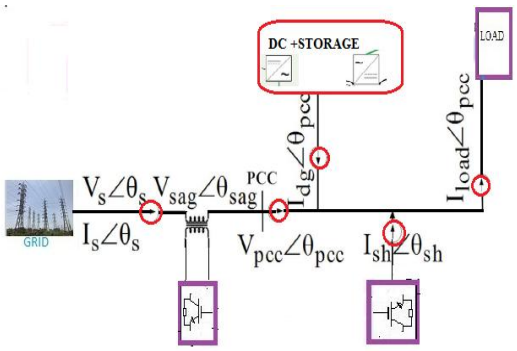

Figure.1(d)

Figure. 1. (a) UPQC µg-IDR integration mode and its principle. (b) Mode of interconnected operation (c) isolation mode of operation (d) fundamental frequency representation

III. DESIGN AND SELECTION OF RATING

The representation of the fundamental frequency is shown in the Figure.1(d) ,the relationship between the current and voltage is derived in [1],[2]. According to working principle of APFse works during the voltage sag/well/interruptions up to some extent before it gets isolated. APFsh compensates the QH power of load. The selection and design rating of

series transformer, APFse,APFsh and sizing of the dc link capacitor is also important and mentioned in the next section.

$$V_{pcc}\angle\theta_{pcc} = V_s\angle\theta_s + V_{sag}\angle\theta_{sag} \quad (1)$$

$$I_{Load}\angle\theta_{load} = I_s\angle\theta_s + I_{dg}\angle\theta_{pcc} + I_{sh}\angle\theta_{sh} \quad (2)$$

A. APF(APFsh) shunt part of UPQC µg-IDR

APFsh compensates non-fundamental current of load at any condition by injecting the shunt current in quadrature with Vpcc. APFse injects the required voltage for compensating the voltage sag appeared on the supply side for maintaining constant voltage and also zero-phase atpcc. For the completion of it, additional current will be drawn by APFsh from source for supplying the power to APFse. The source current is in phase with Vpcc, even with the increase in its magnitude. But there is a change in phase angle and magnitude of compensating current Ish as shunt compensator current will be added to the additional current of active component(x). Finally it increases current at the PCC and VA loading impact on APFshis created as mentioned in the [6]. So, it is

$$I_s^{'} = I_{pcc} + I_{sh}^{'}\sin(\theta_{sh}^{'}) \quad (3)$$

$$I_{sh}^{'} = I_{sh} / \cos(\theta_{sh}^{'}) \quad (4)$$

B. APF(APFse) series part of UPQC µg-IDR

The Series APF and the grid are always in series. In thetechnique proposed for integration, if the energy is not obtained from the DG units and shunt part, APFse will compensate the reactive power and also harmonic component of the load current since fundamental component of load current will flow through APFse. To overcome this problem Series filter should have same rating of current as active component of load requirement.

$$I_{APF_{se,\min}} = I_{loadfp} \quad (5)$$

The generalised equations of voltage sag for compensation by series active filter are

$$V_{sag} = \sqrt{V_s^2 + V_{pcc}^2 - 2V_sV_{pcc}\,\mathrm{Cos}(\theta_s - \theta_{pcc})} \quad (6)$$

The highest injected value of sag voltage must be equal to series active filter voltage rating and it is written as

$$V_{APF_{se,rated}} = V_{sag,\max} = KV_{load,rated} \quad (7)$$

It is assumed that K is fraction of Vs, which reflects as voltage sag

$$V_{sag} = kV_s = kV_{load}, \mathrm{k} < 1$$

So, Volt Ampere rating value of series active filter is given as

$$S_{APF_{se,rated}} = I_{APF_{se,rated}} V_{APF_{se,rated}} = KP_{loadf,rated} \quad (8)$$

In the case Idg = 0, the active power through the series as shown inFigure.2 can be obtained

$$P_{APF_{se,}} = P_{loadf}[\frac{kV_s}{V_{load}}\mathrm{Cos}(\theta_s - \theta_{pcc})] \quad (9)$$

During the operation of in phase and stable condition, it is assume thatθs = θpcc = 0

$$P_{APF_{se,}} = \frac{kP_{loadf}V_s}{V_{load}} \quad (10)$$

During this process of compensating thevoltage sag, magnitude of the source current which is transferred through series active filter of the series transformer which is shown in the Figure.2(e) is obtained as

$$I_s^{'} = \frac{P_{loadf}}{(1-k)V_s} = \frac{1}{(1-k)} I_{loadfp} \quad (11)$$

So, the VA rating and size of series transformer is based on magnitude of the sag which has to be compensated. As value of the k increases, the source current also increases. Basing on the information in [5]-and for assigned value of the k, a number of solutions for I's, Vsag and PAPFse may exists. [5]-[7].

APFse rating of voltage is very important in designing the parameters as it governs some of the characteristics. They are range of compensation, the need for inclusion of storage devices and their size, series transformer overall rating.

C. DC Link Capacitor

During the occurrence of high swell or sag and interruption, APFse mustoperatebefore it leaves to isolated mode. At this instant, the abilities of DC link capacitor must be 1) The value of dc voltage and ripple in steady state should be maintained. 2) serve as energy storing element and also to supply non-active power of load as compensation 3) the active power differences between source and load should be supplied during the conditions of swell/sag/interruption period. For some specific systems, it is very much better in considering higher values of Cdc such that it handles all the above conditions of operation. A better response of the transient state and lower steady state ripples are also obtained. From the calculation in [8], the size of the capacitor for proposed system will be as follows:

$$C_{dc} = \frac{2S_{load}.n.T}{4.\mathrm{c}.\mathrm{V}_{dc}^2} \quad (12)$$

Here Sload is total rating of load in VA and n is cycles required for performingthe function, T is the interval of time and c isVdc‘s percentage.

It indicates compensation of capacitor size which isadjusted byselectingthe cycles (n) and APFse. The purpose of proposed integration method technique in UPQC µg-IDR is for maintaining smooth supply of power during swell/sag/interruption and also extends flexibility of operation of DG converters during both modes of isolation and interconnected state. DG storage is introduced, for the continuity in supplying power. In the system proposed, a dc link is placed between the DG storage and capacitor. It also helps in decreasing the capacitor’s size and provides supply during interruption or condition of sag..

IV. DESIGN OF THE CONTROLLER

The proposed block diagram is shown in the Figure.4 which has the same functions as UPQC controller and has added functioning of reconnection capabilities and isolation detection. A channel of communication for signal transfer between µg and UPQC µg-IDR for smooth operation is required. The signals which are generated are based on swell/interrupt/sag/supply conditions of failure. The present function is carried out at second level i.e., control of hierarchy which is secondary [9]. First Level deals with control of the UPQC which is primary and performs the primary function in both recombination and isolated mode [10].

The integration technique along with control strategy is used for the improvement in quality of powerduring both modes of isolated and interconnected states. So, it involves detection of isolation and also reconnection which ensures DG converter remain connected and also supplies active power to load. Thus, decreases the controlling complexity of the converter along with possibility of power failure in isolated modeas mentioned in Figure 2(b).

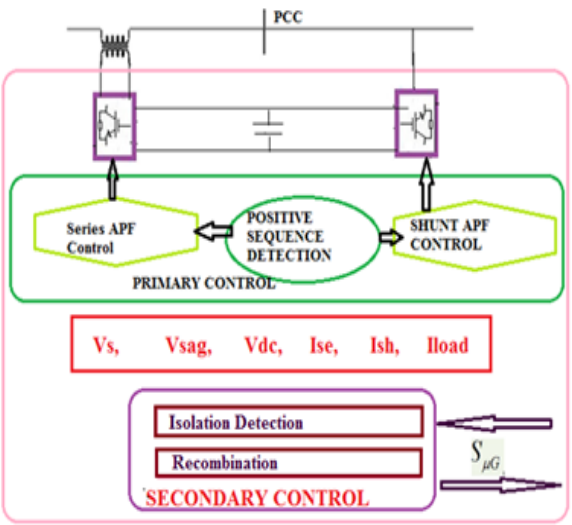

(a) UPQC µg-IDR Controller

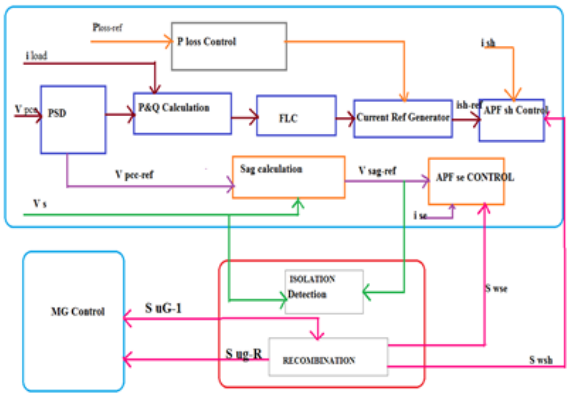

(b) Controller algorithm

Figure. 2. Block diagram of UPQC µg-IDR. (a) Controller. (b) Controlleralgorithm

The proposed five important elements are UPQC µg-IDR controllers are as follows: 1) detection of positive sequence 2) APFse 3) APFsh 4) synchronization and recombination (synRec). The new features of UPQC are Innovative detection, Isolation, and synchronous recombination are explained in detail.

A. INNOVATION ISOLATION DETECTION:

Besides isolation detection, to change the control scheme from current to voltage, the problem severityincreases with the delay of control in isolation detection [15]. Therefore, smooth and continuous transfer of voltage between grid and isolated mode is significant [12,13]. Many controlling techniques are mentioned in [2], that increases controlling complexity for micro-grid converters[11]-[15].

Based on the requirements of isolation detection, recombination, interruptions, sag, swell compensation, with reference to Figure.2 (a), (b), isolation is detected and signal Sµg –I is generated. In the process of proposed method UPQC µg –IDR a signal is generated for transferring to the DG converter. The proposed algorithm is IDR for UPQC µg-IDR and it is very simple and flexible. It helps in reducing the complexity of isolation and recombinationdetection of DG converters.

The algorithm used for the generation of signals ismore simple and adjusted the value of Verrorfor any length of time specified. Here,flexibility in operational time and compensation of sag/interrupts control can be achieved before it gets isolated. Since there is continuous transfer i.e., voltage transfers the from grid connected mode to the isolation mode which is very critical task in period of transition and completes at zero-crossing position of theAPFse, henceforth, there will be no voltage fluctuations or any impulse conditions.

The algorithm and the isolation techniquedeveloped in the control part of UPQC is very flexible and innovative in its operation. The operation and control of switches is important for both innovativeisolation, the seamless recombination which are shown in the Figure.1. In this case, the paper presents a step ahead when comparison with the use of intelligent connection agents (ICA) in [12], ICA and existing µg are connected with increased number of current sources which is an additional module. UPQC µg-IDR described in the paper performs the seamless transitions and also improves the quality of power with flexibility in operations. UPQC has series element (APFse) which performs a vital role of voltage source forµg, the observation of PCC voltage is based on anti-isolation algorithm and it is implemented as mentioned inFigure 2(b). In conventional system, i.e., the systems which are grid connected with PV and in non-detection zoneincreases with number of inverters, as they cannot distinguish between PV inverter orexternal grid output voltages. So, they remain in connection for a long period of time which is dangerous. In this proposed control strategies of UPQC, an existing PV plant can be added and it is only responsible for the support of voltage and isolation detection. So, it has more

effectiveness and reduces drastically non detection zone.

B. SYNCHROZINATION AND RECOMBINATION

Oncere-establishment of the grid is occurred, µg can be recombined to the main grid and returns to the condition before its interruption. Avery smooth recombination is obtained if the difference between phase, voltage magnitudes, frequency of two buses which are closer to zero or minimized. This seamless recombination depends on theperformance& accuracy ofthe methods of synchronization [18]. APFseperforms recombination in the case of UPQC µg-IDR. Because sag/swell are controlled by APFse, it has the advantage of recombination of the system even if phase difference or jump to some extent between utility and PCC voltages. This flexibility in the operation is automatically increased with high quality of power in µg. The limitation of phase difference is based on APFserating and level of Vsag-maxfor the compensation.

By assuming the value of Vsag-max= Vs= Vpcc, the θsag-max is obtained as

θsag-max= cos[(θs–θpcc)]-1= 1/2 = 60°(13)

The relations of the magnitude and phase difference between Vpcc, Vsag, Vsare given in Figure .6(a). This Figureshows also zero-crossing point of Vsag-refbasing on the phase. When the instantaneous difference of voltage between utility and PCC becomes zero crossing is also detected by it. By detecting zero-crossing point and operation of switches S2 and S3 as shown in Figure.1are key control of the recombination method for continuous transfer from off-grid to on-grid condition and also changing controller of DG inverter from voltage to the current control mode.

This method of recombination is shown in the Figure.3(b) and the conditions of recombination are as follows: 1) It is assumed that the phase difference must be within θsag-max between DG and the utility grid. 2) the instantaneous values of both the bus voltages will be equal 3) they must occur at condition of zero-crossing. After blackout, once the utility supply is restored, a synchronization pulse which is generated in the process of recombination will be enabled to start the synchronization. Basing on the conditions shown in Figure.3(b), a simple logical sequence generates active pulses for the switches S2 and S3 for returning the system to interconnected mode. At this instant UPQC µg-IDR, as represented in the Figure.2(b) is transferred to µg for recombination.

One of the advantages of IDR and Synchronous recombination method is carried in level 2 as secondary control, they can be added as additional block in conventional UPQC to convert to UPQC µg-IDR. In the proposed UPQC µg-IDR, it is very helpful in meeting the integration of grid advanced features as specified in the [18].

V. PERFORMANCE STUDY & RESULTS

With the drastic improvement in technology, the system is developed and modelled in Matlab using simulation software for observing the performance.

An active distribution network with 3-phase, 3-wire line Voltage 230v, with proposed UPQCµg-IDR as shown in the Figure.1 is simulated in software.

The specifications of the simulation developed are as follows: UPQCµg-IDR with a sag of 100% , harmonic currents compensation of maximum 100A and the Micro grid with load of 200A max, harmonic current 100A max, DG has 0.5 to 1.5 times of fundamental component of load. Simulations in the MATLAB are performed upto2 sec for observing complete performance of system.

In Figure.3 (a) it shows the switching positions of (0 for open and 1 for close) during simulation for a period of 0 to 2sec in which both the modes of islanded and interconnected are observed. The proposed system of UPQCµg-IDR's voltage sags performance is given in Figure.3 (b) and compensation of harmonic current is given in the Figure.3(c). The condition of sag occurs at 0.3sec to 0.7 sec and sag interrupt till 1.1sec. Islanding operation takes place from 1.1sec to 1.4 sec and recombination mode occurs at 1.4 sec to 2.0 secGenerally, all waveforms of phase A are only shown in the outputs.

A. Mode of interconnected operation

In interconnected mode, there are two possible operations which are forward flow and reverse flow. In this forward flow, load demand is larger than the DG power available. Therefore, the balance power to load is supplied by utility. When the load demand is lower than the generated DG, power is transferred to grid and also to storage and the process is known as the reverse mode of operation. At this instant, voltage at the PCC will be out of phase with grid current.

B. Mode of Isolation Detection

In accordance with theµg-IDR series active filter which compensates sag upto 0.6sec which is 30 cycles and now system changes into isolated mode. Now disconnection of utility at instant of 1.11sec is applied immediately after completion of the 30 cycles and it detects zero crossing of Vsag-ref which leads to opening of S2 and S3. At this instant of disconnection,µg will operate in the isolated mode. Now, if load demand is larger than the DG power available then the required excess power is supplied by the storage. If load demand is lesser than the DG power available, excess power is supplied to storage for charging. Here compensation of the non active power is still performed by the APFsh. Hence, the disconnection of the DG converter or changing of control strategy is not needed and supplies only active power to load. In Figure.7 the proposed system of UPQCµg-IDR's performance at instant from 1.0 sec to 1.2 sec, here isolation mode is detected at 1.1 sec immediately after zero crossing detection. Now, at time instant between 1.11 and 1.405 sec mode of isolation is observed. Now , series active filter is disconnected at these instants which is shown in the Figure. 4(b) and Vsag , Is are zero which is shown in the Figure. 4(c).

The load is supplied by both the storage and the DG and shunt active Filter operates continuously as shown in the Figure. 4(c).

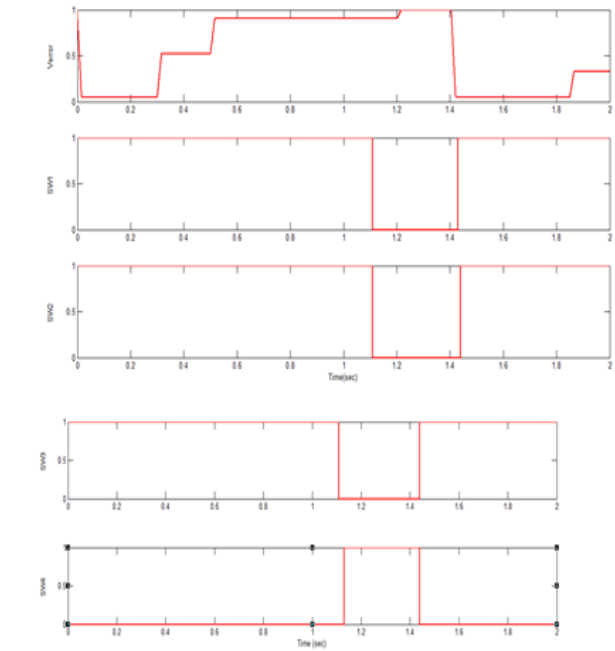

(a)

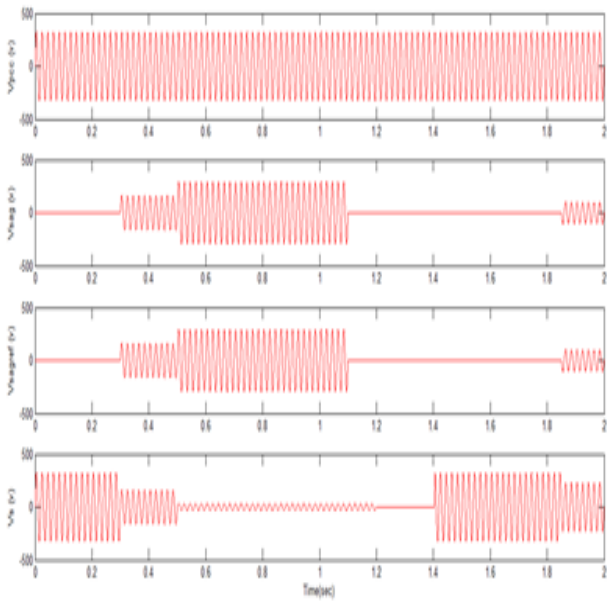

(b)

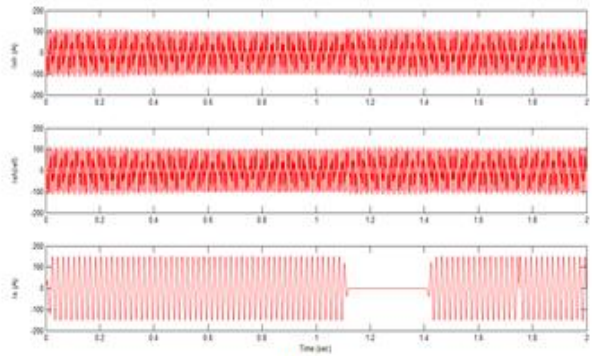

(C)

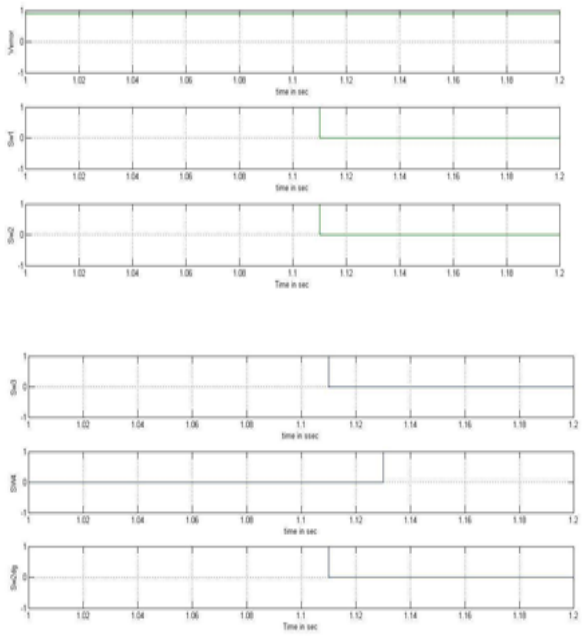

(a)

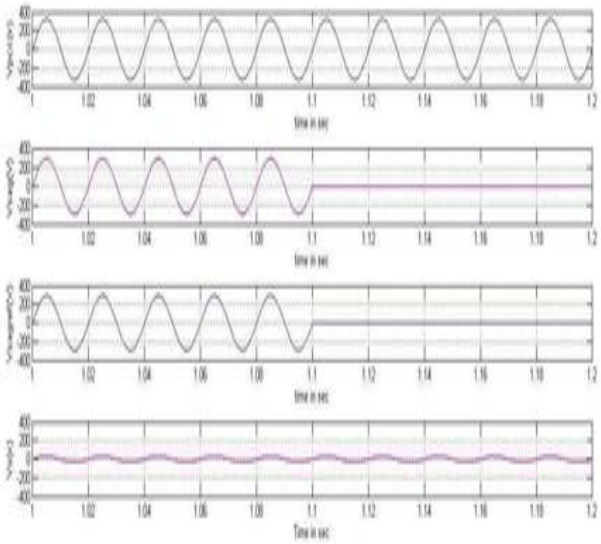

(b)

Figure. 3. (a) positions of switches during modes of operation (b) waveforms of voltage (c) current with different conditions of operation

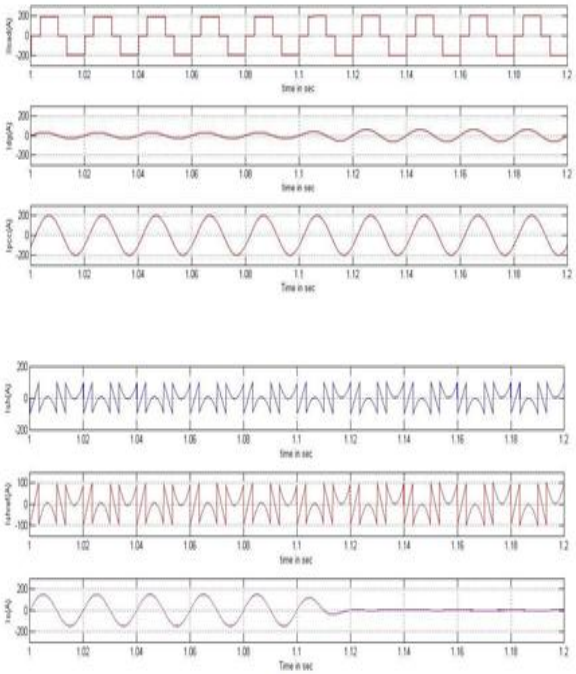

(c)

Figure. 4. Performance operation ofswitches during mode of isolation(a) S2 and S3 in open state. (b) APFse (c) APFsh

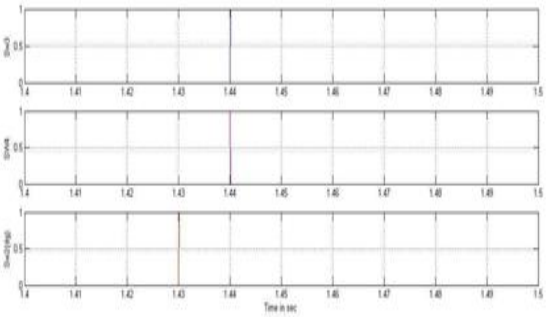

(a)

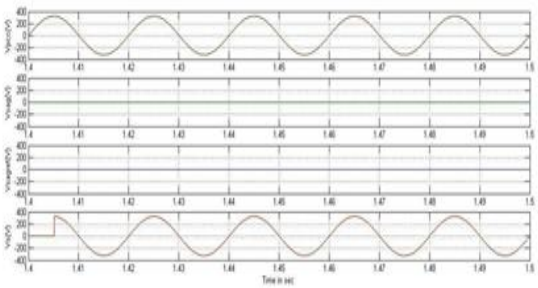

(b)

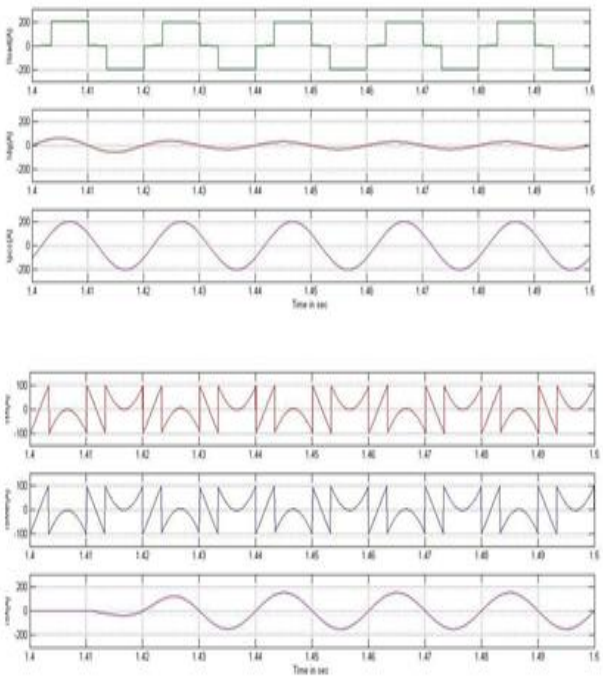

(c)

Figure. 5. Performance operation of switches during mode of Recombination (a) S3 and S2 in closed state. (b) APFse (c) APFsh

C. Mode of Recombination

The signal for the process of reconnection are shown in the Figure. 8. For checking its performance and considering one of worse condition, utility

gridVs at an instant of 1.4 sec is powered and 400 out of phase from the PCC. Now the recombination process is activated immediately and generates active pulses when the condition of amplitude difference and phase magnitude were within the prescribed limitsthe switches activated are S2 and S3 at 1.415 and 1.405sec. As shown in the Figure. 5(a) APFse reactivates immediately and start its operation if Vs is obtained and S3 connects at 1.405sec as shown in the Figure. 5(b). Once S2 is closed at 1.415sec then transfer of power starts as indicated in the Figure. 5(c). It is also expected, there will be no transfer of power at the instant of reclosing according to condition of smooth reclosing. Within the conditions of limitation the switching processes is carried successfully and shown in the Figure. 5(b). There is also a change in control mode from voltage to current in DG and transfers only fundamental active current component. Shunt APFsh also interrupted during the process of transition.

VI. CONCLUSION

The present paper analysed a powerful UPQC µg-IDR controller for the Isolation and Recombination technique. The proposed UPQC innovative detection and recombination in both grid connected and µg conditions and the results shows that it will compensate the current and voltage disturbances at PCC during recombination mode also and it is observed in bidirectional condition of power flow. The performance

analysis in bidirectional power flow is also observed. The active power is supplied by the DG converter only in the isolated mode. The operation of the µg in any operating mode and at any instant, DG converters need not be disconnected or no necessity of changing in control strategy. The bidirectional flow of power and dynamic changes in the Innovative Isolation,detection and recombination technique by using UPQC µg-IDR is validated withMatlab environment without compromising any of the quality of power for a distribution generation integrated with µg system.

REFERENCES

1. S. K. Khadem, M. Basu, and M. F. Conlon, "UPQC for power qualityimprovement in DG integrated smart grid network—A review," Int. J.Emerg. Electr. Power Syst., vol. 13, no. 1, p. 3, 2012.
2. A. Kahrobaeian and Y.-R. Mohamed, "Interactive distributed generationinterface for flexible µg operation in smart distribution systems,"IEEE Trans. Sustainable Energy, vol. 3, no. 2, pp. 295–305, Apr. 2012.
3. S. K. Khadem, M. Basu, and M. F. Conlon, "A new placement andintegration method of UPQC to improve the power quality in DGnetwork," in Proc. 48th UPEC, vol. 1. Sep. 2013, pp. 1–6.
4. M. Basu, S. P. Das, and G. K. Dubey, "Comparative evaluation of twomodels of UPQC for suitable interface to enhance power quality," Electr.Power Syst. Res., vol. 77, no. 7, pp. 821–830, 2007.
5. D. M. Vilathgamuwa, A. R. Perera, and S. S. Choi, "Voltage sagcompensation with energy optimized dynamic voltage restorer," IEEETrans. Power Del., vol. 18, no. 3, pp. 928–936, Jul. 2003.
6. S. S. Choi, J. D. Li, and D. M. Vilathgamuwa, "A generalized voltagecompensation strategy for mitigating the impacts of voltage sags/swells,"IEEE Trans. Power Del., vol. 20, no. 3, pp. 2289–2297, Jul. 2005.
7. M. R. Banaei, S. H. Hosseini, S. Khanmohamadi, andG. B. Gharehpetian, "Verification of a new control strategy fordynamic voltage restorer by simulation," Simul. Model. Pract. Theory,vol. 14, no. 2, pp. 112–125, 2006.
8. S. K. Khadem, M. Basu, and M. F. Conlon, "Harmonic powercompensation capacity of shunt APFand itsrelationship with design parameters," IET Power Electron., vol. 7,no. 2, pp. 418–430, 2013.
9. J. M. Guerrero, J. C. Vasquez, J. Matas, L. G. de Vicuña, and M. Castilla,"Hierarchical control of droop-controlled AC and DC microgrids—Ageneral approach toward standardization," IEEE Trans. Ind. Electron.,vol. 58, no. 1, pp. 158–172, Jan. 2011
10. B. Han, B. Bae, H. Kim, and S. Baek, "Combined operation of unifiedpower-quality conditioner with distributed generation," IEEE Trans.Power Del., vol. 21, no. 1, pp. 330–338, Jan. 2006.
11. H. Kim, T. Yu, and S. Choi, "Indirect current control algorithm for utilityinteractive inverters in distributed generation systems," IEEE Trans.Power Electron., vol. 23, no. 3, pp. 1342–1347, May 2008.
12. J. Rocabert, G. M. S. Azevedo, A. Luna, J. M. Guerrero, J. I. Candela,and P. Rodríguez, "Intelligent connection agent for three-phase gridconnectedmicrogrids," IEEE Trans. Power Electron., vol. 26, no. 10,pp. 2993–3005, Oct. 2011.
13. Z. Yao, L. Xiao, and Y. Yan, "Seamless transfer of single-phasegrid-interactive inverters between grid-connected and stand-alonemodes," IEEE Trans. Power Electron., vol. 25, no. 6, pp. 1597–1603,Jun. 2010.
14. F. Gao and M. R. Iravani, "A control strategy for a distributed generationunit in grid-connected and autonomous modes of operation," IEEETrans. Power Del., vol. 23, no. 2, pp. 850–859, Apr. 2008.
15. Y.-R. Mohamed and A. A. Radwan, "Hierarchical control systemfor robust microgrid operation and seamless mode transfer inactive distribution systems," IEEE Trans. Smart Grid, vol. 2, no. 2,pp. 352–362, Jun. 2011.
16. M. Brenna, R. Faranda, and E. Tironi, "A new proposal for power qualityand custom power improvement: OPEN UPQC," IEEE Trans. PowerDel., vol. 24, no. 4, pp. 2107–2116, Oct. 2009.
17. B.Rajani, Dr.P.Sangameswararaju, "Performance Analysis of MC-upqc using artificial Intelligence," Ph.D.,Disseration, Department of Electrical and Electronics Engg, SVU university, India, June,2014.
18. K. S. Khadem, "Power quality improvement of distributed generation integrated network with unified power quality conditioner,"Ph.D. dissertation, Dept. Elect. Electron. Eng., Dublin Inst. Technol.,Ireland, Europe, Jan. 2013.