International Journal of Engineering and Advanced Technology (IJEAT)
ISSN: 2249-8958 (Online), Volume-9 Issue-1, October, 2019

# Classification of Sleep Disturbance and Deep Sleep using FFT, PCA, and Neural Network

**Sang-Hong Lee**

***Abstract*: This paper proposes a method to classify sleep disturbance and deep sleep using electroencephalogram (EEG) signals at sleep stage 2, fast Fourier transforms (FFT), and principal component analysis (PCA). In order to extract the initial features, the FFT was carried out to remove noise from EEG signals at sleep stage 2 in the first step. In the second step, the noise-free EEG signal extracted in the first step was reduced to five dimensions using the PCA. In the final step, the classification performance was measured using the five dimensions as input to a neural network with weighted fuzzy membership functions (NEWFM). In classification performance, accuracy, specificity, and sensitivity were all 100%.***

***Keywords* : Sleep Disturbance, FFT, PCA, NEWFM.**

## I. INTRODUCTION

Sleep is bisected into several stages, largely bisected into rapid eye movement (REM) sleep and non-rapid eye movement (N-REM) sleep [1][2]. REM sleep, in which rapid eye movements occur, is a sleep that dreams and has a characteristic of irregular heartbeat and breathing. N-REM sleep is further classified into sleep stage 1, sleep stage 2, sleep stage 3, and sleep stage 4, depending on the depth of sleep. Sleep apnea syndrome and sleep disturbance are some of the diseases that can occur during sleep. Sleep-related studies are primarily associated with sleep apnea [3][4][5]. In addition, the study of the sleep stage is mainly conducted on the sleep of the same subject, not a comparison between the subjects [6][7]. Sleep disorders are physical, mental, and environmental factors that influence the amount and quality of sleep, which means that sleep, is not regular or experiences abnormal sleep-related physiological phenomena [8].

In this paper, FFT and PCA are used to classify sleep disturbance and deep sleep using Fpz-Cz and Pz-Oz channels of EEG signals at sleep stage 2. In order to extract the features to be used as inputs in a neural network with weighted fuzzy membership functions (NEWFM), noises in EEG signals are removed by wavelet transforms (WTs) or fast Fourier transforms (FFT) from the Fpz-Cz and Pz-Oz channels of EEG signals at sleep stage 2 in the first step. In the second step, the noise-free from the Fpz-Cz and Pz-Oz channels of EEG signals at sleep stage 2 was reduced to 80 features using statistical techniques [9] by the WT and 5 dimensions by the PCA. In the final step, the neural network with weighted fuzzy membership functions (NEWFM) [9][10][11] used 80 features and 5 dimensions as inputs to classify sleep disturbance and deep sleep. The classification performance was measured that sensitivity, accuracy, and specificity were 91.67%, 91.70%, and 91.73% by wavelet-based feature extraction. The classification performance by the FFT and the PC was measured that accuracy, specificity, and sensitivity were all 100%.

## II. EXPERIMENTAL DATA AND PREPROCESSING

This paper used EEG signals provided by PhysioBank (http://www.physionet.org/physiobank/database/sleep-edf/). The EEG signals were obtained from white men and women between 21 years old and 35 years old. The EEG signals were obtained from the Fpz-Cz and Pz-Oz channels in Fig. 1 with a sampling frequency of 100Hz. In the EEG signals, awake stage, sleep stage 1, sleep stage 2, sleep stage 3, sleep stage 4, and REM are marked as 0, 1, 2, 3, 4, 5.

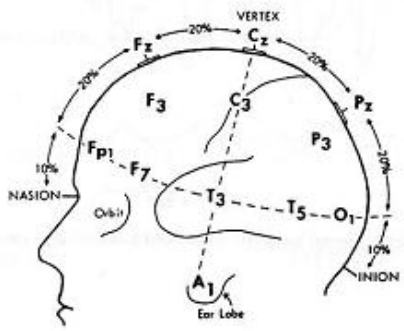


**(a) Left side of head**

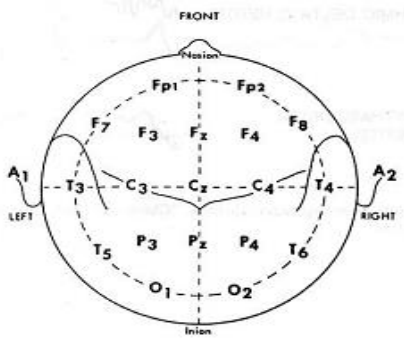


**(b) Top of head**

**Fig. 1 International 10-20 Standard Electrode**

Revised Manuscript Received on October 30, 2019.

* Correspondence Author

**Sang-Hong Lee***, Department of Computer Science & Engineering, Anyang University, Anyang-si, Republic of Korea (e-mail: shleedosa@gmail.com)

In the EEG signals, the sleep stage is marked as shown in (a) of Fig. 2. As shown in (b) of Fig. 2, only the EEG signals at sleep stage 2 was selected. The EEG signals at sleep stage 2 were continuously combined as shown in (c) of Fig. 2. In this experiment, one sleep stage is marked based on the EEG signal for 15 seconds. Therefore, EEG signals with a frequency of 100 Hz are represented by one sleep stage for 15 seconds, so one sleep stage is grouped into 1500 EEG signals. (d) of Fig. 2 shows the results on calculating the EEG signals at sleep stage 2 units calculated for (c). As shown in (e) of Fig. 2, 1024 EEG signals are grouped for this experiment.

This paper used the EEG signals at sleep stage 2. The reason is that can cause slow eye movements at sleep stage 1, and then the EEG signals at sleep stage 2 were selected because there is no eye movement at sleep stage 2 in this experiment.

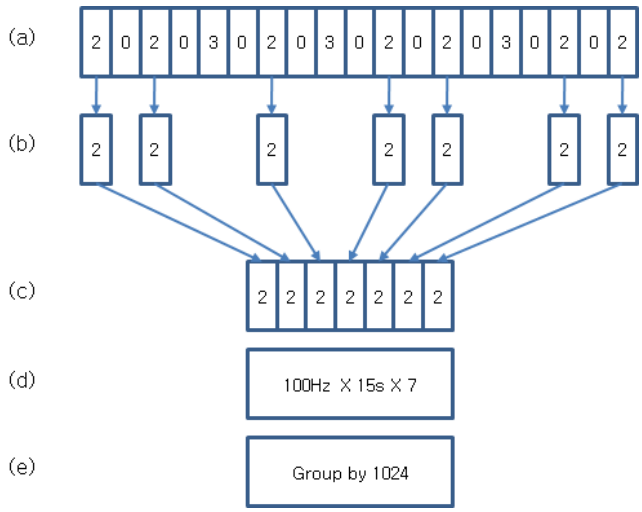


**Fig. 2 Extraction of experimental data from EEG signals**

### A. Wavelet Transforms

This paper performed a bisected discontinuous Haar wavelet transform (WT) at scale level 5 using the EEG signals at sleep stage 2 in Fig. 2 (d) [9][11]. For each of the 40 features on the Fpz-Cz and Pz-Oz channels, using the wavelet-based statistical method using the wavelet coefficient detail and approximation coefficients from level 2 to level 5 [9][11]. The features are as follows:

(1) The average of the absolute values of all coefficients in each level

(2) The average of the square of all the coefficients in each level

(3) The median of all coefficients in each level

(4) The standard deviation of all coefficients in each level

(5) The absolute value ratio of the mean value to all coefficients in each level between adjacent levels.

The statistical methods (1), (2), and (3) refer to the frequency distribution over the EEG signals. In addition, statistical methods (4) and (5) refer to the frequency variation of the EEG signals. In this paper, an experimental group consists of 80 features extracted by statistical methods.

### B. Fast Fourier Transforms

Fast Fourier transforms (FFTs) are algorithms for quickly calculating discrete Fourier transforms. The FFTs are used in many fields, from digital signal processing to algorithms for finding partial differential equations.

In order to perform the FFT, the entire EEG signals at sleep stage 2 in Fig. 2 (d) were grouped by 1024. In this experiment, 513 features of 1024 EEG signals collected from Fpz-Cz and Pz-Oz channels were extracted by the FFT.

### C. Principal Component Analysis

Principal component analysis (PCA) is made up the principal components of the first combination of $n$ given variables and includes the 1st principal component, the 2nd principal component, ... , the mth principal component. In this experiment, 1024 EEG signals collected from the Fpz-Cz channel and the Pz-Oz channel, respectively, were connected to 513 features by the FFT to make 1026 features. These 1026 features were reduced to five dimensions using the PCA.

In this paper, an experimental group was constructed that takes 5 dimensions extracted by the PCA. Using 2982 experimental groups of deep sleep and 2321 experimental groups of sleep disturbance, the training sets and the test sets were bisected into 5 to 5 ratios as shown in Table I.

**TABLE I**
**Experimental group used to classify sleep disturbance (5 to 5)**

| | Training sets | Test sets | Total |
|---|---|---|---|
| Sleep disturbance | 1161 | 1160 | 2321 |
| Deep sleep | 1491 | 1491 | 2982 |
| Total | 2652 | 2651 | 5303 |

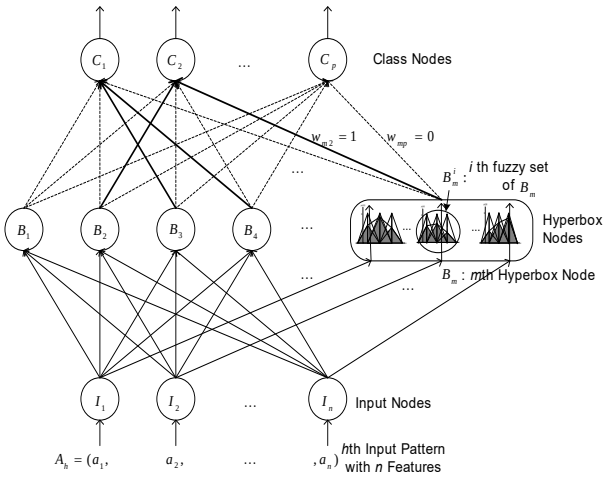


**Fig. 3 Structure of NEWFM**

## III. NEURAL NETWORK WITH WEIGHTED FUZZY MEMBERSHIP FUNCTION (NEWFM)

The NEWFM classified sleep disturbance and deep sleep using the EEG signals at sleep stage 2. NEWFM is a supervised classification fuzzy neural networks on the bounded sum of weighted fuzzy membership functions (BSWFMs) [9][10][11]. Fig. 3 describes the structure of the NEWFM that consists of three layers that are input, hyperbox, and the class layer. The Adjust($B_l$) method adjusted the weights ($W_1$, $W_2$, and $W_3$) and the center of membership functions ($v_1$, $v_2$, and $v_3$) in Fig. 4.

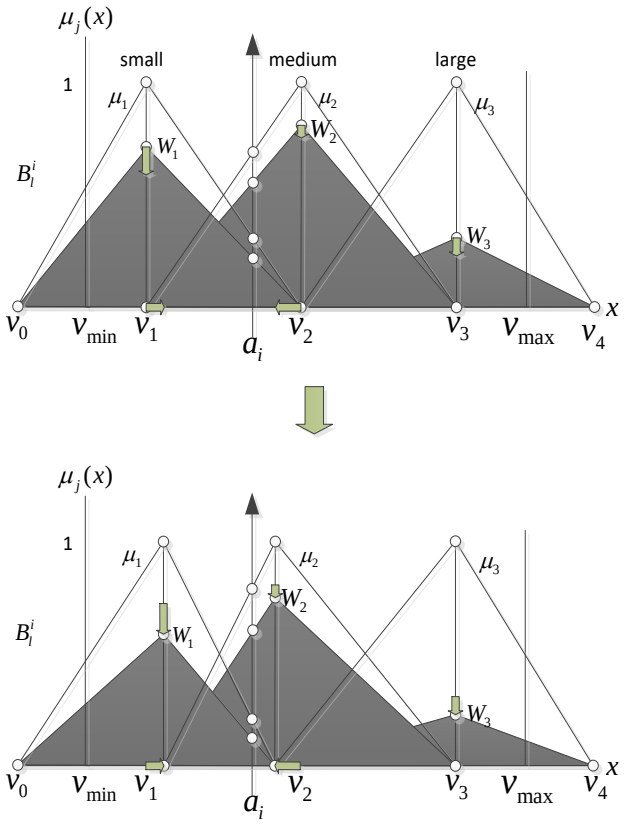


**Fig. 4 Example of before and after *Adjust*($B_l$) method**

## IV. EXPERIMENTAL RESULTS

Table II, Table III, Table IV, and Table V show the performance results using the training set and test set in Table I. TP (True Positive) means that people with sleep disturbance is classified as people with sleep disturbance, and TN (True Negative) means that people with deep sleep is classified as people with deep sleep. In addition, FP (False Positive) means that people with sleep disturbance are classified as those with deep sleep, and FN (False Negative) means that those with deep sleep are classified as people with sleep disturbance. Sensitivity, specificity, and accuracy obtained in Table IV and Table V are defined as in Eq. (1). Table IV and Table V also compares the performance results of the WT and the FFT.

$$Sensitivity = \frac{TP}{TP + FN} \times 100$$
$$Specificity = \frac{TN}{TN + FP} \times 100 \qquad (1)$$
$$Accuracy = \frac{TP + TN}{TP + FN + TN + FP} \times 100$$

**TABLE II**
**Confusion Matrix of Performance Results Using WT**

| | | |
|---|---|---|
| Sleep disturbance | TP | FN |
| | 1034 | 126 |
| Deep sleep | FP | TN |
| | 94 | 1397 |

TABLE III
Confusion Matrix of Performance Results Using FFT

| | | |
|---|---|---|
| Sleep disturbance | TP | FN |
| | 1160 | 0 |
| Deep sleep | FP | TN |
| | 0 | 1491 |

TABLE IV
Performance Results Using WT

| | Sensitivity | Accuracy | Specificity |
|---|---|---|---|
| Performance (%) | 91.67 | 91.70 | 91.73 |

TABLE V
Performance Results Using FFT

| | Sensitivity | Accuracy | Specificity |
|---|---|---|---|
| Performance (%) | 100 | 100 | 100 |

## V. CONCLUDING REMARKS

This paper can sleep disturbance and deep sleep using the Fpz-Cz and Pz-Oz channels of the EEG signals at sleep stage 2. The WT and the FFT are used for noise reduction. The EEG signals at sleep stage 2 is not a frequency analysis over time, but a frequency analysis at a specific time. Therefore, the performance results using the FFT is higher than that of the wavelet transform. These experimental results show that the FFT is more effective than WT for sleep analysis.

## ACKNOWLEDGMENT

This work was supported by the National Research Foundation of Korea (NRF) grant funded by the Korea government (MSIT) (No. NRF-2019R1F1A1055423).

## REFERENCES

1. Matthieu Hein, Jean-Pol Lanquart, Gwenolé Loas, Philippe Hubain, Paul Linkowski, "Alterations of neural network organisation during rapid eye movement sleep and slow-wave sleep in major depression: Implications for diagnosis, classification, and treatment," Psychiatry Research: Neuroimaging 291, 71-78, 2019.
2. Kimberley Whitehead, Maria Slobodina, Judith Meek, Lorenzo Fabrizi, "Fronto-central slow cortical activity is attenuated during phasic events in rapid eye movement sleep at full-term birth," Early Human Development 136, 45-48, 2019.
3. Kurupath Radhakrishnan, Aparajita Chatterjee, Shankar P. Gorthi, Varsha A. Prabhu, "Sleep Apnea-Predictor of Functional Outcome in Acute Ischemic Stroke," Journal of Stroke and Cerebrovascular Diseases 28, 807-814, 2019.
4. Melissa A. Socarras, Barcleigh P. Landau, Megan L. Durr, "Diagnostic techniques and surgical outcomes for persistent pediatric obstructive sleep apnea after adenotonsillectomy: A systematic review and meta-analysis," International Journal of Pediatric Otorhinolaryngology 121, 179-187, 2019.
5. ChS. S. S. Viswabhargav, R. K. Tripathy, U. Rajendra Acharya, "Automated detection of sleep apnea using sparse residual entropy features with various dictionaries extracted from heart rate and EDR signals," Computers in Biology and Medicine 108, 20-30, 2019.

6. Dihong JIANG, Yu MA, Yuanyuan WANG, "Sleep stage classification using covariance features of multi-channel physiological signals on Riemannian manifolds," Computer Methods and Programs in Biomedicine 178, 19-30, 2019
7. Dihong JIANG, Ya-nan LU, Yu MA, Yuanyuan WANG, "Robust sleep stage classification with single-channel EEG signals using multimodal decomposition and HMM-based refinement," Expert Systems with Applications 121, 188-203, 2019.
8. Baker, T. L., "Medical clinics of north america," Philadelphia; Saunders, 1985.
9. Sang-Hong Lee, Joon S. Lim, Jae-Kwon Kim, Junggi Yang, Youngho Lee, "Classification of normal and epileptic seizure EEG signals using wavelet transform, phase-space reconstruction, and Euclidean distance," Computer Methods and Programs in Biomedicine 116, 10-25, 2014.
10. Sang-Hong Lee, "Feature selection based on the center of gravity of BSWFMs using NEWFM," Engineering Applications of Artificial Intelligence 45, 482-487, 2015.
11. Joon S. Lim, "Finding Features for Real-Time Premature Ventricular Contraction Detection Using a Fuzzy Neural Network System," IEEE Transactions on Neural Networks 20, 522-527, 2009.


## AUTHORS PROFILE

**Sang-Hong Lee** received the B.S., M.S., and Ph.D. degrees in computer science from Gachon University, Korea in 1999, 2001, and 2012, respectively. He is currently an assistant professor in the department of computer engineering at Anyang University, Korea. His research focuses on deep learning systems, neuro-fuzzy systems, and biomedical prediction systems.