International Journal of Engineering and Advanced Technology (IJEAT)
ISSN: 2249-8958 (Online), Volume-9 Issue-1, October, 2019

Fuzzy Pi Controller Based Single Phase Hybrid Inverter for Domestic Applications

P N Sidhartha, S. Muthubalaji, G Devadas

***Abstract:** This project proposes a topology for Fuzzy PI controller based single-phase Hybrid solar photovoltaic (PV) inverter with for Domestic applications. The proposed Hybrid power converter consists of a PV cells, MPPT algorithm, switched mode buck boost converter in the DC side, battery bank and a single phase bridge inverter. The Control strategy of the inverter gate pulses are done by the sampling of sinusoidal pulse width modulation (SPWM) with a square wave which is controlled by Fuzzy and PI combined controller, along with grid synchronization condition. The performance of the proposed inverter is simulated under grid-connected scenario and load disturbances. The output of PV module system is enhanced by the maximum power point tracking (MPPT) technique using P & O algorithm in order to increase the systems efficiency. This system is more useful for the households as it has both power storing and saving applications.*

***Keywords:** Fuzzy PI controller, Photovoltaic system, Renewable energy, Sinusoidal pulse width modulation (SPWM).*

I. INTRODUCTION

Today majority of the world population are tilted towards renewable energy systems most preferably solar as its eco-friendly and maintenance free energy system. Grid tie system and Standalone system are the two types of solar plants. In grid tie system we only export the power but cant store the power and in standalone system we can only store the power but cant export the power. To get the advantages of both hybrid systems[1] are to be used. In general hybrid systems are with different energy sources like wind, fuel cell, batteries etc., to get advantages of multiple energy sources. Single phase hybrid inverters have many topologies like nine level cascaded inverters[2] which would reduce the harmonics.

In DC side for the support of PV we can have super capacitors [3] which can stabilize DC and AC harmonics by less switching pulses. In the AC side random pulse width modulation technique[4] can be implemented to reduce high frequency harmonics. Overall as discussed by H A Pham N et.al [5] in general for domestic applications we have much of PV and battery resource only. So the hybrid inverter which we use is based on this topology.

Revised Manuscript Received on October 30, 2019.

* Correspondence Author

PN Sidhartha*, PG Scholar, Power Electronics, Department of EEE, CMR College of Engineering & Technology, Hyderabad, India. Email: sidharthpandari@gmail.com

Dr. S Mthubalaji, Professor, Department of EEE, CMR College of Engineering & Technology, Hyderabad, India. Email: muthusa15@gmail.com

G Devadas, Professor & Head, Department of EEE, CMR College of Engineering & Technology, Hyderabad, India. Email: gdavadas10@gmail.com

In [6] Sergiu Spataru et.al have done a survey to observe the total installed capacity of solar. It was roughly estimated to be 400GWp, which is less than 2% of the world's population. So there is a study made and test methodology implemented to observe the performance. The different battery sources are tested like LI-ion battery and Lead Acid battery etc., the comparative study is made. But in this system DC-DC converters are not discussed. In these hybrid systems majorly the gate pulses are to be controlled to reduce the harmonic distortion. By using ZETA controller the gate pulses can be controlled to the maximum extent [7]. In this system, the open loop THD was observed to be 15.29% which can be even more reduced. The harmonics can also be reduced by implementing multi level inverters especially 3- level inverters[8]. But generally multi level inverters are only employed to 3- phase systems not to the single phase systems. The sophisticated switching technology for switching the gate pulses through which the harmonics in the output power supply can be reduced. The new switching technique is employed by using PLC[9]. But if the switching technology is external to the inverter system then there is a high chance that it may fail. To implement any system the arithmetic behind the system[10] is must as calculations play a important role in any system. But these calculations must be both on the grid side and battery side. Further there are many studies those are done on the three phase systems and the different control strategies are implemented like primary inductances in PV side[11], neuro fuzzy controllers and honey bee algorithm [12], and multiple inputs like wind and DG sets are employed [13] to obtain better outputs and reduced harmonics. Multi level inverters like 5- level inverters [14] are also discussed for reducing harmonics. But these techniques can only be implemented majorly for 3-phase systems not for single phase. After all the observation of economic criteria [15] which is a major concern for any system to be implemented. Even the DC converter like cuk converters to be used with LC filters which would enhance the DC side performance.

After observing all the above systems, the major problem that can be addressed is that in single phase hybrid systems the harmonic distortion should be reduced. Hence in the present proposed architecture will address the problem identified. Now by using this architecture the household can experience both power storage and power export both by single inverter system with the quality power.

II. EXISTING SYSTEM

The existing system consists of a PV module, MPPT controller, bi directional converter, Batteries, Inverter and a PI controller.

Here in this system the gate pulses are controlled by only PI controller. The block diagram can be observed in the figure 1.

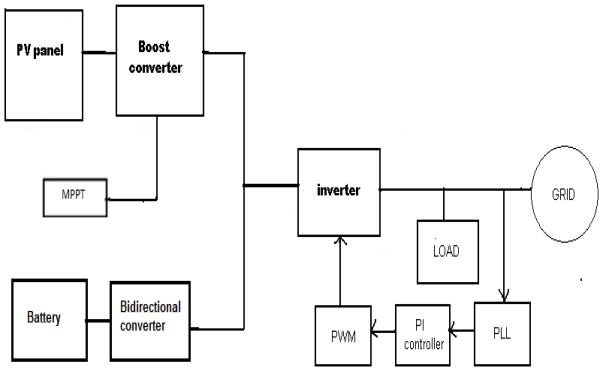

Fig. 1 Block Diagram of existing system.

In this system the DC sources are both PV module and batteries. The major resource would be only PV. In the absence of solar the stored battery power is utilized. The power from solar panel is fed to boost converter which is operated by a Maximum Power Point Tracking (MPPT) controller to get the better DC output. The obtained DC is fed to both battery and a inverter. For the battery the DC is fed through bidirectional converter and to the inverter it is given directly. And in the inverter output side, obtained AC output is smoothened and controlled by gate pulses and they are controlled by PWM technique through PI controller.

Here we have a advanced technique better than the existing architecture in the proposed system.

III. PROPOSED SYSTEM ARCHITECTURE

In the proposed system, FUZZY based PI controller is used to control the gate pulses. So we can have smoother AC waveform than the previous architecture. The following figure 2 shows the block diagram of the proposed system.

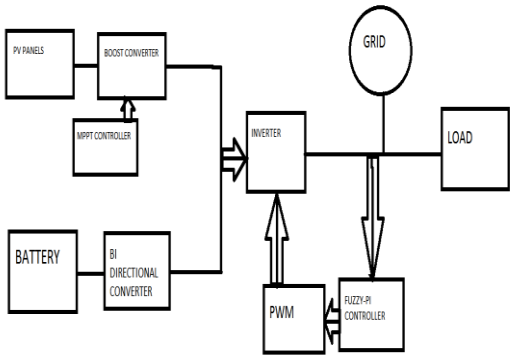

Fig.2 Block diagram of proposed system

IV. PV CELL MODELING

The Photo Voltaic cell equivalent circuit is shown in figure 3

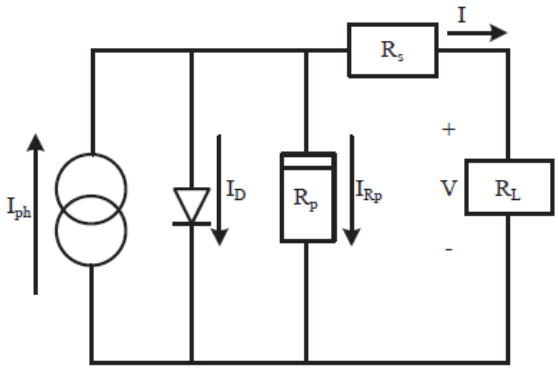

Fig.3 PV cell equivalent circuit.

The ideal Photo Voltaic cell is represented by a current source with a parallel diode. As Ideal PV cell cannot exist, circuit is added by shunt and series resistance as shown in Fig. 3.

Where,
R_s → The series resistance (very small value).
R_p → The equivalent shunt resistance (very high value).

Applying KCL at the node where current source (I_{ph}), diode, R_p and R_s meet, then the current equations are given as [1]

$$I_{ph} = I_d + I_{Rp} + I \quad (1)$$

The PV current "I" is obtained as [1],

$$I = I_{ph} - (I_d + I_{Rp}) \quad (2)$$

$$I = I_{ph} - (I_0[e^{((V+IR_s)/VT)} - 1] + (V+IR_s)/R_p \quad (3)$$

Where ,

I_{ph} → Insolation current,
I → The cell current,
I_o → The reverse saturation current,
V → The cell voltage,
V_T → The thermal voltage.

A. Analysis of PV array

The major constituent of PV array is a solar cell(p-n junction), that directly converts light energy into electricity. The equivalent circuit is shown in Fig. 4.

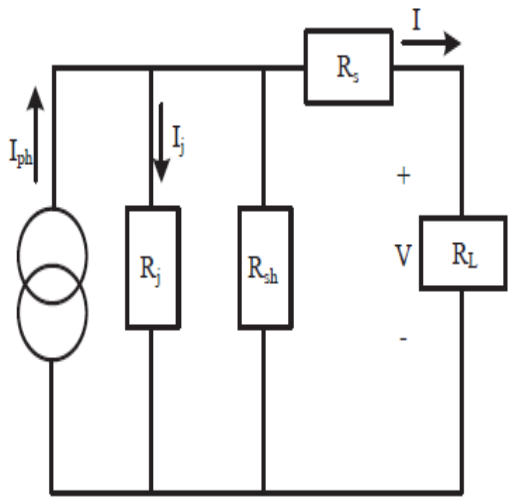

Fig.4 Solar PV array Equivalent circuit

Here,
I_{ph} → The cell current,
R_j → The p-n junction non linear impedance,
R_s and R_{sh} → The intrinsic series and shunt resistance respectively.

As discussed before the value of R_{sh} is very large and R_s is very small, so both can be neglected to analyse the Array model. Many PV cells are connected together called PV modules which are further interconnected in series-parallel combination to form PV arrays [1]

$$I_0 = n_p I_{ph} - n_p I_{rs}[e^{((qV0)/kTAns)} - 1] \qquad (4)$$

Where
I_0 → The Output current of PV Array,
V_0 → The output voltage of PV array,
n_s → The PV cells in series,
n_p → The PV cells in parallel,
$q = 1.6 \times 10^{-19}$C
k = 1.38 X 10-23 $kgm^2s^{-2}K^{-1}$,
A → The ideality factor of p-n junction,
T → Temperature of the cell in Kelvin,
I_{rs} → The reverse saturation current of cell.

The Ideality factor depicts the variation of cell from the ideal p -n junction characteristics and in general its value varies from 1 to 5. The cell released PV output current I_{ph} is totally dependent on the solar radiation and cell temperature [1] so the equation is given as

$$I_{ph} = [I_{scr}+K_i(T - T_r)]S/100 \qquad (5)$$

Here
I_{scr} → Short circuit current of Cell at referred radiation and temperature ,
K_i → Temperature coefficient of the short circuit current
S → The radiation in mW/cm^2.of Sun(solar)

The PV array analysis is carried out by Simulink and is shown in figure 5. The analysis includes three subsystems. One subsystem to analyse PV module and two more subsystems to analyse I_{ph} and I_{rs}

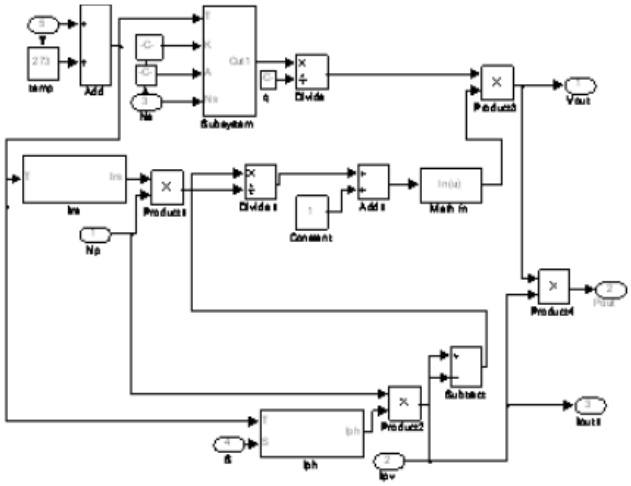

Fig.5 PV module Simulink Analysis

B. Efficient Power Tracking of PV Array:

Maximum power point tracking technique (MPPT) is employed to track maximum output power from PV array. Though there are different techniques discussed in the literature for tracking maximum solar power from PV Array, we adapt P&O algorithm due to its simplicity. The simulink model of P&O algorithm is shown in Fig.6.

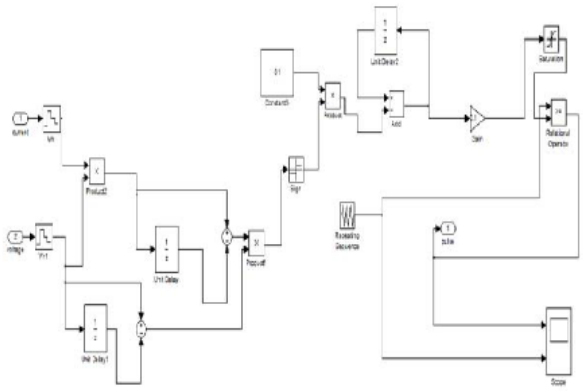

Fig.6 Simulink Model of P & O Algorithm

C. Boost Converter

The PV/battery hybrid system is connected to the single phase inverter through a Boost converter. Here the boost converter input is taken from the output of the MPPT. The boost converter output voltage is

$$Vo = Vd/(1-D) \qquad (6)$$

Where
V_d → Input voltage,
D → Duty ratio.

The output of the boost converter is given as the input to both the single phase inverter and the Bi directional converter [1].

D. Bidirectional Converter

Figure 7 represents the basic circuit of a bidirectional (Buck-Boost) converter. The main objective of this converter is to maintain the fixed dc link voltage.

The switch S1 is ON while the converter is charging, then the circuit works as a boost converter. The switch S2 is ON while the converter discharging, then the circuit works as a buck converter [1].

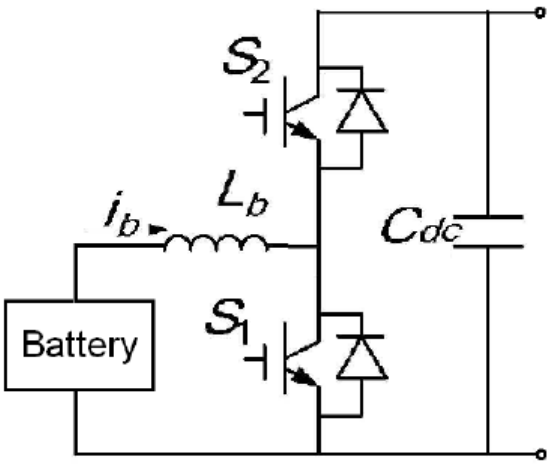

Fig. 7 Bidirectional DC-DC converter

Figure 8 depicts The controlling model of the bidirectional converter. When the DC link voltage less than the reference, switch S2 is ON and when it is higher than the reference voltage, switch S1 is ON [1].

Here

I_b → The current of the battery and

I_{bref} → Referred value of battery current.

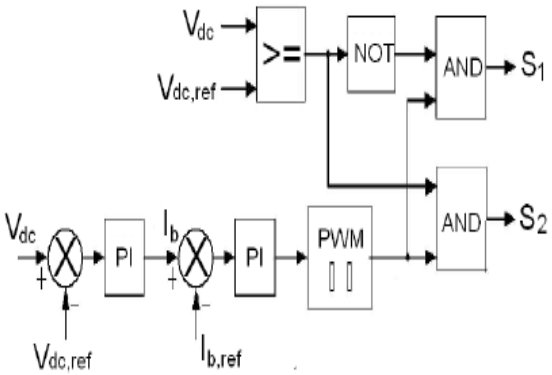

Fig. 8 Bidirectional converter Control mechanism

E. Gate Pulse Control Mechanism

The feedback system used for controlling the gate pulses here is Fuzzy PI control algorithm. The grid current(I_g) is sensed and fed back to a comparator. It compares with the reference current I_{ref}. I_{ref} is obtained by sensing the grid voltage and comparing it to a reference voltage and multiplying it with a constant. This ensures that I_g is in phase with grid voltage Vg and always at nearly unity power factor. After this the Fuzzy PI controller is implemented to reduce the Distortion in the output Wave form. In this system, the fuzzy variables are Kp and Ki gains of the PI controller. The values of these Kp and Ki are varied by the fuzzy controller depending upon the generated error signal.

The Fuzzy surface corresponding to the membership function is given in figure 9. Figure 10 Shows the PWM strategy..

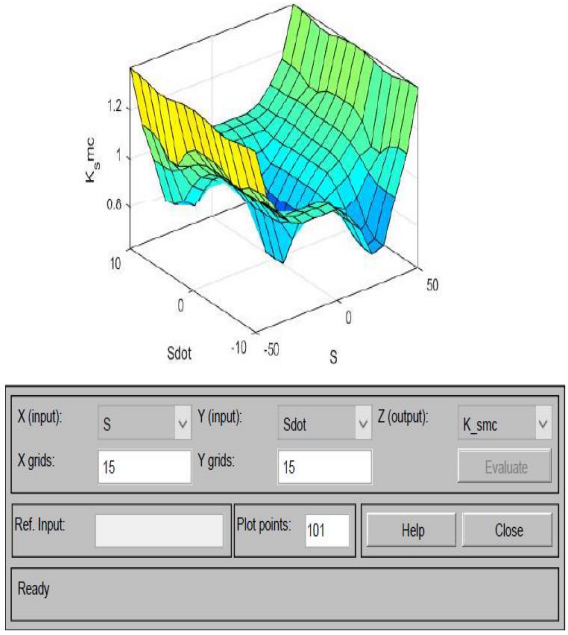

Fig.9 Fuzzy surface of given membership function

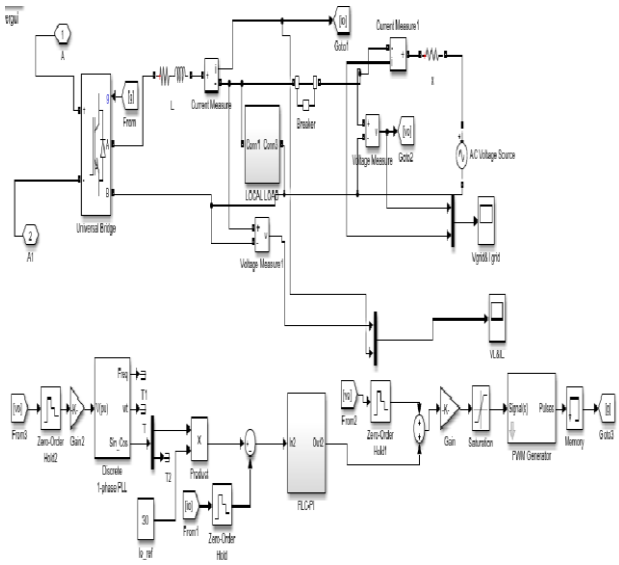

Fig. 10 Simulink diagram of Inverter with Fuzzy PI Controller

V. RESULTS AND DISCUSSION

The output VI characteristics of both grid and load are given below in the fig.11 and Fig. 12 on the condition that the grid is switched off from 0.5 seconds to 1 second. At the point of power failure, the grid supply current is switched off. So the obtained power is not fed to grid at this point of time. The load on the other hand is fed without any interruption. That is one of the way the proposed architecture is highly beneficial to households.

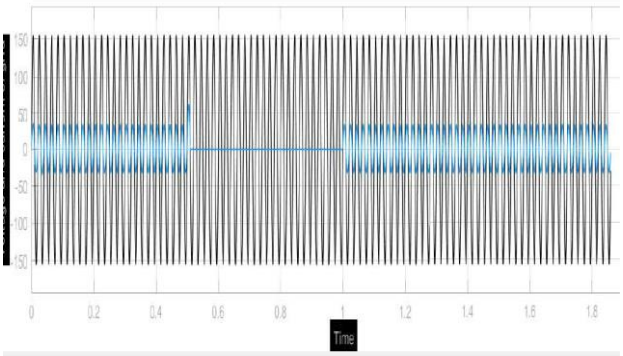

Fig.11 VI profile of grid

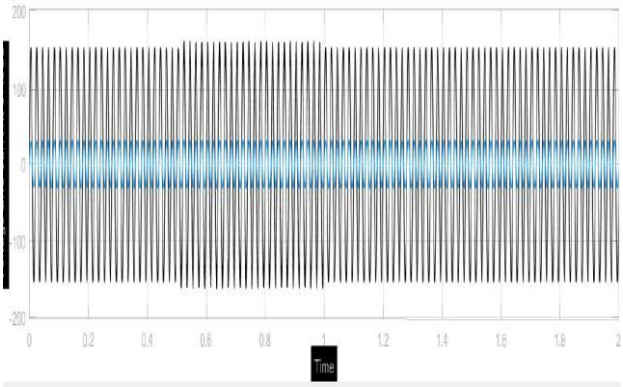

Fig.12 VI profile of load

V. COMPARATIVE STUDY

This section discussed the comparative study of THD levels with PI and Fuzzy PI controller. This discussion exended for grid side also.

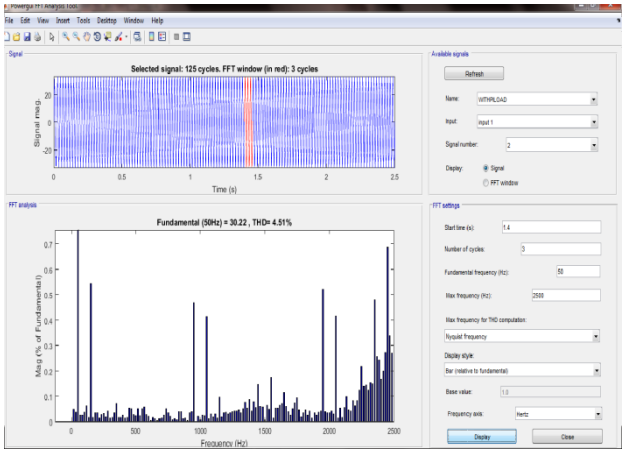

Fig.13 Load THD with only PI controller (4.51%)

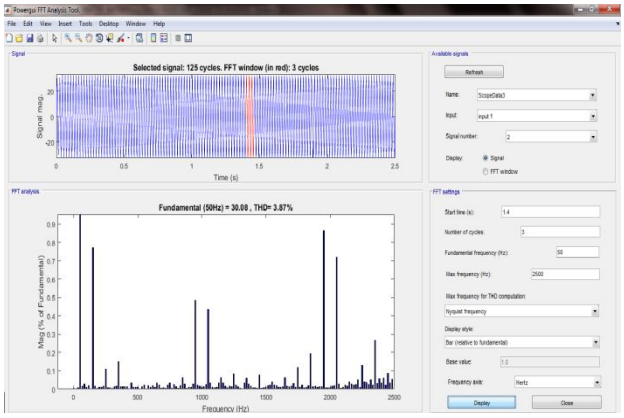

Fig.14 Load THD with Fuzzy PI controller (3.87%)

At load side the Total Harmonic Distortion (THD) levels have been reduced almost by 1% now the same can be compared at the grid side.

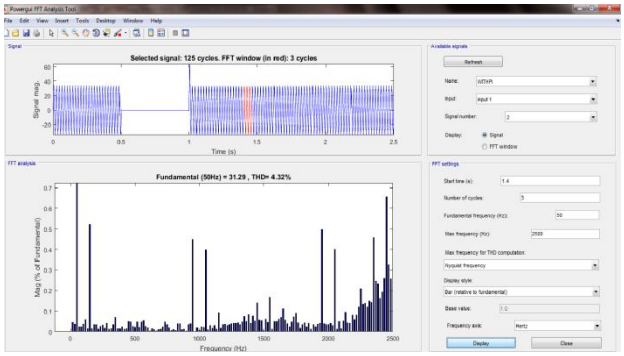

Fig.15 Grid THD with only PI controller (4.37%)

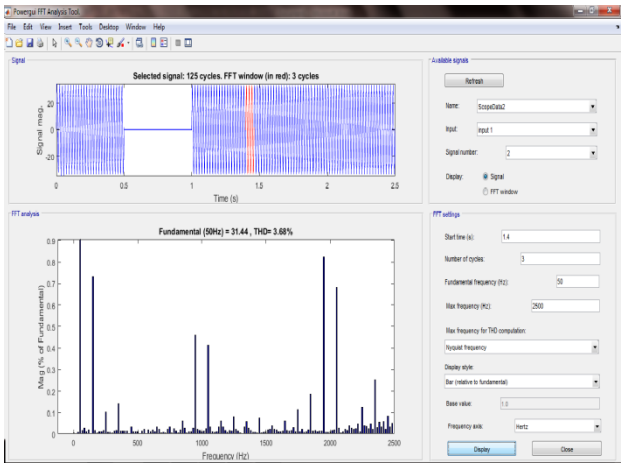

Fig.16 Grid THD wit Fuzzy PI controller (3.68%)

Even in the grid side the harmonic distortion levels have been reduced by almost 1%

Table 1. THD comparison

	Only PI Controller	Fuzzy PI Controller
Load	4.51%	3.87%
Grid	4.37%	3.68%

As observed in the comparative studies of both load and grid sides, the THD levels are reduced giving out the quality power with very less distortion. Due to this, the machine safety of house hold is assured better.

VII. CONCLUSION AND FUTURE SCOPE

The above comparison of the proposed system and the existing system clearly explains that by using fuzzy PI controller THD value can be reduced by 1%. The proposed system ensures the power quality for the domestic applications. The implementation of the present system in the global market can be a huge revolution. There is also scope of getting different smart control systems where the power quality is even more enhanced. The proposed system opens a new gate way for the young generation to think about the household and improvise the power quality of the system.

REFERENCES

1. Biju, K., and Rijil Ramchand. "Control of a novel single phase grid connected solar PV/battery hybrid energy system." 2015 10th Asian Control Conference (ASCC). IEEE, 2015.
2. Ramaprabha, R., and G. Ramya. "Implementation of photovoltaic fed single phase nine level hybrid cascaded modular multilevel inverter with reduced number of devices." 2017 IEEE 12th International Conference on Power Electronics and Drive Systems (PEDS). IEEE, 2017.
3. Xiong, Lan, et al. "A hybrid CHB multilevel inverter with supercapacitor energy storage for grid-connected photovoltaic systems." 2018 IEEE Applied Power Electronics Conference and Exposition (APEC). IEEE, 2018.
4. Rönnberg, Sarah K., et al. "Solar PV inverter supraharmonics reduction with random PWM." 2017 11th IEEE International Conference on Compatibility, Power Electronics and Power Engineering (CPE-POWERENG). IEEE, 2017.
5. Pham, N. Ha. "Direct storage hybrid (DSH) inverter: A new concept of intelligent hybrid inverter." 2017 IEEE Energy Conversion Congress and Exposition (ECCE). IEEE, 2017.
6. Spataru, Sergiu, et al. "Test Platform for Photovoltaic Systems with Integrated Battery Energy Storage Applications." 2018 IEEE 7th World Conference on Photovoltaic Energy Conversion (WCPEC)(A Joint Conference of 45th IEEE PVSC, 28th PVSEC & 34th EU PVSEC). IEEE, 2018.
7. Dong, Yuan, et al. "Research of hybrid PV inverter with energy storage function." Proceedings of 2014 International Conference on Modelling, Identification & Control. IEEE, 2014.
8. Kerem, Alper, et al. "Smart grid integration of micro hybrid power system using 6-switched 3-level inverter." 2017 5th International Istanbul Smart Grid and Cities Congress and Fair (ICSG). IEEE, 2017.
9. Arafa, Mohamed Ibrahim A., El-Sayed Soliman A. Said, and Mahmoud Elwany. "An optimized design criteria of non-outage and power reduction for hybrid solar-grid system (residential homes—case study)." 2017 Nineteenth International Middle East Power Systems Conference (MEPCON). IEEE, 2017.
10. Raval, Rajdeep, and Sourav Choubey. "Calculation and modeling of hybrid power generation system using solar energy." 2017 International Conference on Intelligent Sustainable Systems (ICISS). IEEE, 2017.
11. Mukundan, CM Nirmal, and P. P. Jayaprakash. "Isolated SEPIC converter fed trinary hybrid cascaded H-bridge multilevel inverter for solar PV system." 2017 IEEE Region 10 Symposium (TENSYMP). IEEE, 2017.
12. Ravikumar, S., and H. Vennila. "Hybrid wind solar system for efficient power generation." 2017 International conference of Electronics, Communication and Aerospace Technology (ICECA). Vol. 1. IEEE, 2017.
13. Archana, N., and K. I. Anupamma. "Multi-input Inverter for Hybrid Wind-Photovoltaic Standalone System." 2018 Second International Conference on Computing Methodologies and Communication (ICCMC). IEEE, 2018.
14. Raj, B. Sri Nitin, R. Siddharth, and S. M. Shyni. "MPPT with bi-directional DC-DC converter and multi-level inverter for grid connected hybrid system." 2017 International Conference on Computation of Power, Energy Information and Commuincation (ICCPEIC). IEEE, 2017.
15. Mohod, Swapnil B., Vikramsingh R. Parihar, and Sagar D. Nimkar. "Hybrid power system with integration of wind, battery and solar PV system." 2017 IEEE International Conference on Power, Control, Signals and Instrumentation Engineering (ICPCSI). IEEE, 2017.

AUTHORS PROFILE

PN Sidhartha, PG Scholar, (Power Electronics) Department of EEE, CMR College of Engineering & Technology, Kandlakoya, Hyderabad. He had received B.Tech degree in 2012 from CMR college of Engineering & Technology, Kandlakoya Hyderabad. He is highly enthusiastic in doing research in the field of Fuzzy systems and artificial intelligence.

Dr. S Muthubalaji, Professor, Department of EEE, CMR College of Engineering & Technology, Kandlakoya, Hyderabad. He received his B.E Degree in Electrical & Electronics Engineering from University of Madras, Tamil Nadu, India. He persuade his M.E Degree in Power electronics & drives from Anna University Chennai, Tamil Nadu, India. He obtained his Phd degree from Anna Universty Chennai, Tanilnadu, India in power system engineering. He is working as Professor in CMR College of Engineering & Technology, Hyderabad, Telangana, India. His Other Research areas of Interests are Power electronics, Intelligent Techniques, power quality, and Distributed Generation. He is the Member of The Institution of Engineers (India)

G.Devadas, Professor & Head, Department of EEE, CMR College of Engineering & Technology, Kandlakoya, and Hyderabad. He obtained his B.Tech degree in 1997 from Nagarjuna University, M.Tech degree in 2002 with a specialization in Power Systems and Automation from Andhra University, Visakhapatnam, India and presently pursuing his PhD from JNTU Hyderabad. He has 15 years of teaching experience. His research area of interest is power quality, Power systems and intelligent controllers.