International Journal of Engineering and Advanced Technology (IJEAT)
ISSN: 2249-8958 (Online), Volume-8 Issue-6S3, September 2019

An Automated Trash Monitoring Systemfor Waste Management Using IoT– (I-Bin)

Krithika. S, Kaja Maideen J, Madan T K C

Abstract—The growth of Urbanization has increased vigorously in recent years, so is the increase in waste production. Management if waste is the critical issue to be considered at this high time. This idea of i-Bin is a way to achieve this good cause. Most of the times the garbage bins or dustbins placed at public places in cities are overflowing, creating unhygienic conditions for people. Also it affects cleanliness of that place spreading a bad odour. The present system has separate section of workers allotted for monitoring and cleaning the trashes at periodic intervals. But this is not properly maintaining the sanitation and management of wastes. The concept of connecting all the trash bins to a common network will be helpful in providing a control and overview of trash bins in the city. This i-bin aims to solve the problem of trash overflow and helping the workers in cleaning the necessary bins. In this paper we have implemented the idea of automation in waste management all over the city using intelligent bin(i-Bin). i-Bin is using the new technologies like Raspberry Pi, IR distance/ultrasonic sensor, actuators and weight sensors along with an application to improvisethe mechanisms for waste collection and waste processing.

I. INTRODUCTION

The smart trash monitor is basically an embedded system where Embedded implies "hardware controlled by software". Here, the software using a Microprocessor monitors and controls all the hardware's connected to a database. The Microprocessor plays a vital role in the system. The system aims to monitor and clean the trash bins with help of the hardware components and a web storage portal collectively forming an IoT.This requires a product possessing the capability to store the data in the cloud and send responses when required. This is possible by the ultrasonic sensor, weighing sensor and an actuator interfaced with the Microprocessorwith LAN for communication. The web storage part is done with the help of the database and visualized using a web application. The web application consists of the data of all bins connected to the database and provides an optimized route to collect the trash with help of maps. Thus provides a complete system to monitor the whole process of trash collection over a desired location.

Manuscript published on 30 September 2019.
***** Correspondence Author (s)
Krithika.S, Kumaraguru College of Technology, Coimbatore, Tamilnadu, India.(Email: krithika.s.ece@kct.ac.in)
KajaMaideen J, Kumaraguru College of Technology, Coimbatore, Tamilnadu, India.
Madan T K C, Kumaraguru College of Technology, Coimbatore, Tamilnadu, India.

A.Goal and Objectives:

The objective is to promote cities that give a healthy surrounding with a clean and sustainable environment. In real world, use case for smart trash monitors, it could observe the amount of trash in and around an neighborhood or city. This product optimizes garbage clearing timings and human involvement required to send vehicles to clear the trash at nominated places while cutting down fuel expenses and vehicle emission. Another problem addressed in this paperis tackling the quick replacement of trash can, in case they block and overflow onto side ally's or streets. This innovative system of waste management would lead to reduced carbon footprint, lower greenhouse gas emissions and clean cities on time. This paper focuses on providing solutions for waste management, garbage collection route planning, efficient tracking and intimation of the bins. Automated system provides long term solution and can take care of the conventional methods like wastage level determination, collecting the garbage at right time. A web application conveys all the information about the bin's status in a convenient manner and provides an efficient method to collect the trash.

II. REQUIREMENT ANALYSIS

A.Problem Definition

The present system has separate section of workers allotted for monitoring and cleaning the trashes at periodic intervals. But this is not properlymaintaining the sanitation and management of wastes. First of all the need is to memorize the definition of Smart trash monitor one more time i.e. to builda prototype to intimate the trash level automatically rather than manually.

B.Hardware Requirements

The requirements include both hardware components associated with Microprocessor unit. Down under are the components required:-

1. Raspberry Pi [1]
2. HC-SR04 ultrasonic sensor
3. Load cell (3kg)
4. HX711 ADC module
5. DC motor-100rpm (with L293D motor driver)
6. Gear and rack

C.Software requirements

1.Google maps API:

The Google Maps API supports enhanced Google Maps onto web pages of other creators, through a simple Java Script interface or a Flash interface.

Its design makes it convenient on both mobile devices as well as conventional desktop browser applications. Google Maps API Premier customers can access the API HTTP over a protected (HTTPS) connection. In this idea, Google maps API are
used for indicating the location and status of the bins. Also maps are used for intimating driver the nearest fulfilled bin. Google maps are integrated in the web application for easy use.[6]

2.MySQL DATABASE

MySQL is a database system that runs on a server in the web. For both kinds of little and big applications it suits well. MySQL is easy to usevery reliable, and fast. Standard SQL is used here. It compiles on a number of platforms. And also it is free to download and use. Oracle Corporationdeveloped, distributed, and supports MySQL. The data in a MySQL database are stored in tables. [7]

III. LANGUAGES USED

Bootstrap is used to develop the front-end of the web application. Bootstrap is an open-source library for crafting websites and web applications. It contains both CSS-based and HTML- based design syntax for buttons, steering, typeface, forms and other interface components, as well as optional JavaScript extensions. Dissimilar to many web frameworks, it concerns itself with front-end development only. For the backend process of the application PHP is used . MySQL is used as database storage. [8].

IV.DESIGN AND IMPLEMENTATION

A. Circuit Design

The design part initially consists of the interfacing of the ultrasonic sensors and calibrating it with the corresponding library program.Finally after interfacing all the units with the Raspberry Pi. The program is uploaded and verified[6].

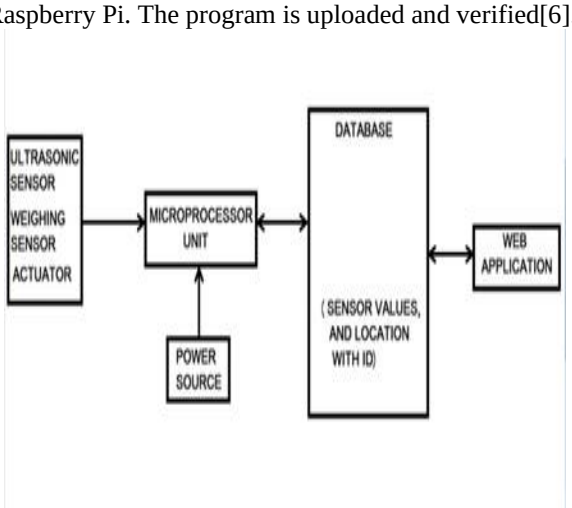

Figure 1 Block Diagram.

B.Implementation.

From the design ultrasonic sensor and Raspberry Pi are found to effective and cost efficient..The Ultrasonic sound waves cannot be heard by humans as it has an extremely high pitch .It is also free from exterior noises generated by both from passive or active sources. This sensorhas a frequency of about 40 kHz and transmits an ultrasonic sound The sensor has two main parts one is the transducer that creates an ultrasonic sound wave and the other part listens to its echo.[3]

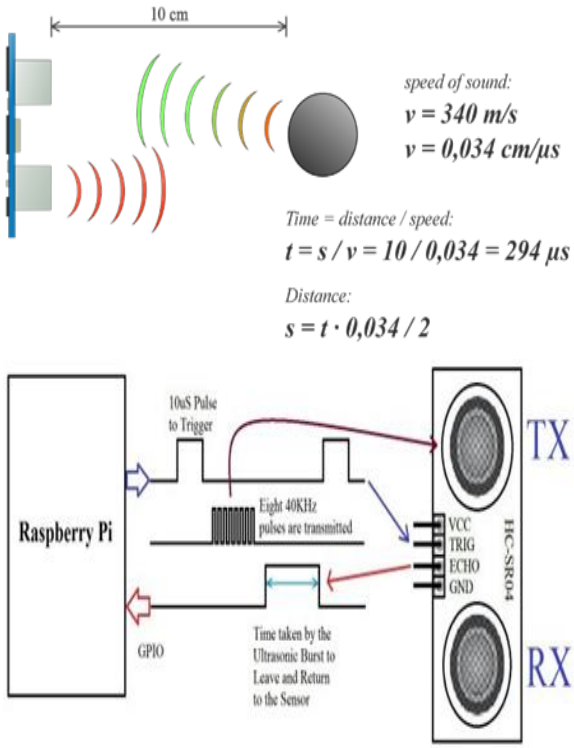

Figure2 Ultrasonic Sensor.

The presence of object or obstacle in its path will spring back to the component. Evaluating the travel time and the speed of the sound the distance \\cabe calculated.

The HC-SR04 Ultrasonic component has 4 pins, Ground, VCC, Trig and Echo. The load cell is connected to the HX711 weight sensor, but initially the load cell is placed between two plates in a rigid position with the help of screws. The crucial part is correct calibration of the weight sensor and the Raspberry Pi balance. For this a comparison object whose weight isknow is required. A reference value is included in the program. A cardboard/metal plate is attached firmly with the rack in order to perform the crushing mechanism. The pinion gear is fitted to the DC motor for the circular motion. Then the rack and the gear are in contact, such a way that the circular motion of the gear results in the linear movement of the rack. The speed and the duration of the linear movement can be programmed as per the requirement. An input voltage of ~11.7V which provides 90 rpm is applied.This results in the crushing of the wastes. The crushing results when the data from the ultrasonic and weighing sensor reaches a threshold level.The raspberry pi is planned with the appropriate conditions. The necessary data are continuously transmitted to the cloud service. The cloud which is used here to store the data is AWS. [4]The data collected from the sensors is sent to the Raspberry pi where the data is sent to cloud services. The data is maintained in the cloud and the periodic information is sent to the diver team in that particular area who monitors the garbage waste system.

Published By:
Blue Eyes Intelligence Engineering
and Sciences Publication (BEIESP)

Any fillings in garbage bins are intimated to the team in order to take quick actions.

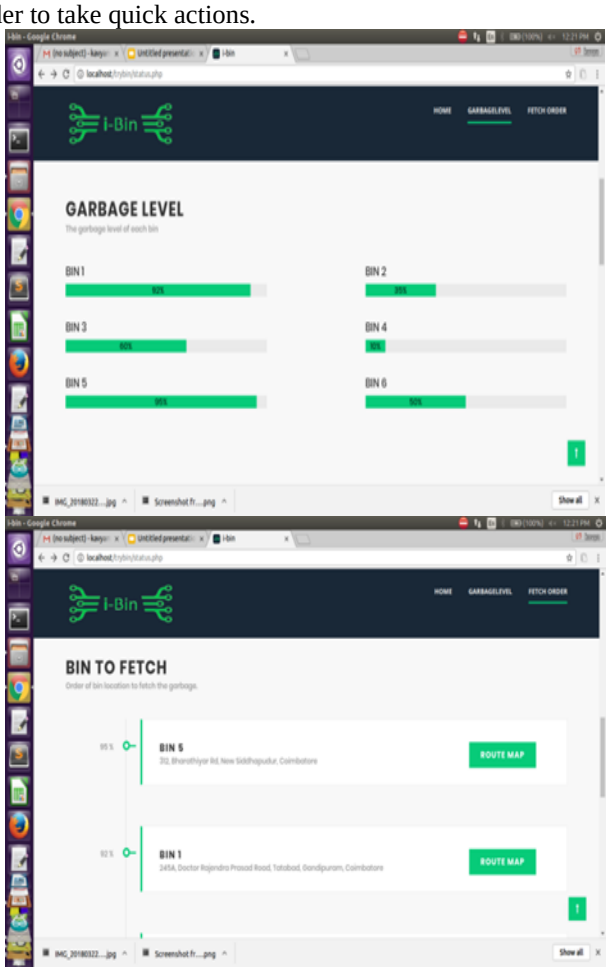

Figure 3 Garbage Level Indicator

The web application is created using php, javascript for the drivers to look on the status of the bins located in each place. This is easily monitored through Google maps. Google maps API are used in this web application for route optimisation. This shows the nearest bins with status of all bins in the single map for the driver. The driver can easily track the filled bins using this map.

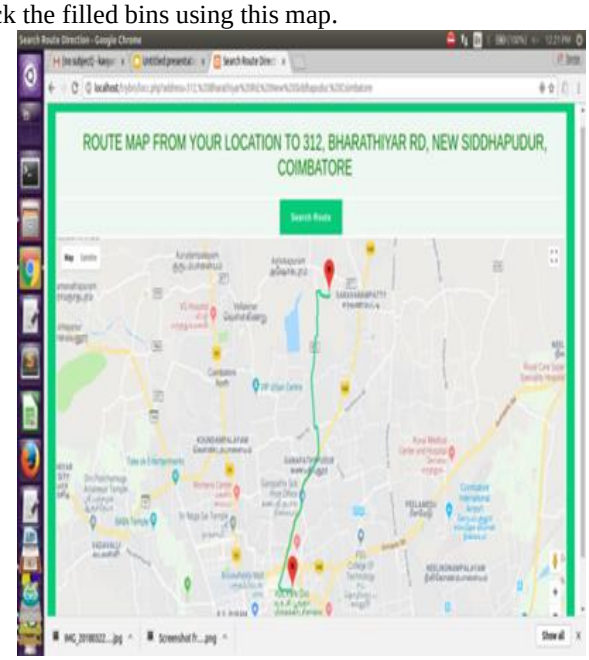

Figure4. Route Map

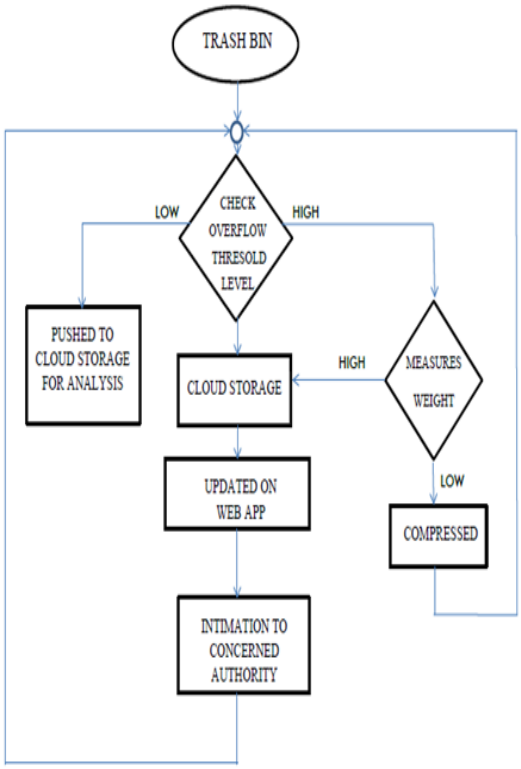

Figure 5 Flow Chart

V.TESTING AND DEPLOYMENT

A.Verification

Thisidea has been fully verified and checked. The program burned into the Pi 3 when plugged into the circuitry is interactive with the other components already placed in the circuit.

B.Validation

What we wanted in the project is to have control over the extension board. At last we were finally able to control the extension board via LAN, and Microprocessor. Further we will be able to connect whatever appliance we want to control by simply cabling it to extension board. The validity of the electronic components deployed in the respective circuit is reasonable and genuine to our knowledge.

C.Evaluation

We showed how simple automation can be introduced from a small scale to large industries, manufacturing sectors, technical areas etc.Via using modern communication standard i.e. GSM we are able to control the electronic areas. Our project has the mixture of electronics & communication and this blend is useful to achieve automation in a developmental manner. Evaluation and judgment is only possible when you will seek the working model having communication standards and its corresponding components.

VI. CONCLUSION AND FUTURE ENHANCEMENTS

A.Conclusion

The idea of Smart trash management will be significantly impacted by the appearance of smart cities in countries such as the US, the UK, Germany, and Japan. These smart cities will accept resourceful waste management systems by installing smart waste bin in both personal and communal places to make sure a hygienic city. Companies like Bigbelly Solar offers waste and recycling stations that are associated with the company's cloud-based purpose called CLEAN. It also provides real-time updates about the status of the bins in its network. Such pioneering connected offerings will generate momentous revenue to the market through the forecast period.Increased use of wireless connected devices and Internet of Things (IoT) will hold this smart trash management through I-Bin.

With the amplification in the use of and dependence upon associated devices and internet of things set in with technologies such as ZigBee and Wifi smart trash cans will be able to convey real-time data. clients can have a more modernized management of waste bins with this data".

Wireless connectivity is now being absolute to a wide range of family circle appliances, away from smartphones and tablets, enabling them to commune with eachother. A lot of smart appliances such as smart trash bins have undergone a evolution to integrate ease of access accompaniments, which attracts a larger end user base.

This system can help in the following applications:

•Empowered SWACHH BHARAT mission.

•e-Governance based on Digital India.

•Reduces the raise of unwanted factors causing diseases and environmental pollution.

•Real-time based cleaning of garbages at necessary intervals.

•It also makes the system transparent between Municipal Corporation,workers and the public.

B.Proposal and scope of Future enhancement

In developing countries overflowing garbage bins has been a major cause of concern for residents. The garbage management and hence the scenario of cleanliness is degrading tremendouslywith respect to, increase in population. The open containers are proving to be a propagation place for microorganisms in addition to more and more existing diseases. Irrespective of whether the containers are full or not the municipalities activate on weekly routes to pick up trash and recyclables on selected days.Our paper aims to optimize waste collection and ultimately reduce fuel using up. The latitude and longitude at aparticular position where the bin are placed ca be detected using the smart phone only once. Since GPS will not be required thereafter the cost of overall system reduces.Furthersonar waves are used to the occupancy inside the container. The temperature is also measured inside the container. Collected data are analysed and displayed on Ubidots web platform for customers. A list of containers to be collected can then be sent to drivers to plan an efficient route.

A real-time monitoring of the civic body's garbage vehicles using RFID can be incorporated. [5]So that who and when and at what time garbage bin were emptied is all recorded and stored in the RFID tag, which in turn curbs laziness of the municipality's garbage collectors.Essentially, this paper is about collecting the most amount of materials in the least amount of time to reduce costs and emissions along the way.Furthermore, the binsupports any type of container and any type of waste, including mixed materials, paper, glass, metals and fluids using protocols for communication via LAN for local areas. In case of failure in the internet connectivity the location and level of the trash bin can be intimated to the mobile phones using API services like Twilio. Thus, there will be saving in fossil fuel due to optimized route for collecting garbage and also enhances cleanliness in and around the surrounding.

REFERENCES

1. Overview | Introducing the Raspberry Pi
2. Literature review on Weigh-in-Motion Systems – publication no. FHWA-HRT-16-024 – June 2016
3. Soundharya, M. and Arunkumar, R., 2015, November. GDI based area delay power efficient carry select adder. In 2015 Online International Conference on Green Engineering and Technologies (IC-GET) (pp. 1-5). IEEE.
4. V. Chayapathy,G S Anitha,BSharath "IOT based home automation by using personal assistant" Smart Technologies For Smart Nation (SmartTechCon), 2017 International Conference , August 2017
5. RoshanIssac,MAkshai -SVASTHA: An effective solid waste management system - https://ieeexplore.ieee.org/document/6629926/
6. Maher Arebey,M A Hannan,HassanBasri-Solid waste monitoring system integration based on RFID, GPS and camera - International Conference on Intelligent and Advanced Systems (ICIAS), 2010
7. Nagaraj, B., and P. Vijayakumar. "Controller tuning for industrial process-a soft computing approach." Int. J. Advance. Soft Comput. Appl 4, no. 2 (2012).
8. MYSQL and PHP -https://dev.mysql.com/doc/apis-php/en/apis-php-mysqli.overview.html
9. Maps Javascript API - https://developers.google.com/maps/documentation/javascript/tutorial
10. An overview of the Apache web server https://www.lifewire.com/definition-of-apache-816509.