International Journal of Engineering and Advanced Technology (IJEAT)
ISSN: 2249-8958 (Online), Volume-8 Issue-6, August, 2019

Condition and Monitoring Of Boiler Parameters by Cbm Using Raspberry Pi Controller

S. Jaisiva,V.Vijayabharathi, P.Vel, S. Sarans

Abstract- In today's modern world, mechanical strength is just one of the many criteria that determine the superiority of any boiler. There are many other more important aspects such as efficiency, 24-hour availability, ease of maintenance, environmental compliance, etc. Modern high-pressure boilers that are equipped with areas optimized for heat transfer due to its nominal load require some of the important operating parameters to be carefully checked to maintain constant production. Thought instrumentation is a very broad topic to discuss, this document highlights some of the tools and control circuits necessary for safe, economical and reliable operation of boilers. In this research project we are monitoring and controlling six important parameters with which the output of the process will be stable. Here we are using parameters sensors: oxygen sensor, humidity sensor, flow sensor, current sensor. This project uses the RASPBERRY PI microcontroller, the output of the sensors produces the analog signal, this signal directly connected to the Raspberry pi microcontroller. The controlled parameters tend to stabilize ensuring the quality of the process in the boiler.

Index terms: Raspberry pi, Flow sensor, current sensor, humidity sensor.

I. INTRODUCTION

While it is theoretically possible to operate a boiler with manual control, the operator must maintain a tedious, constant for disturbances and parameter variations. It takes time for the boiler to respond to a correction and this leads to an excessive correction with further disturbance of the boiler. An automatic controller, once properly adjusted, will make the correct adjustment quickly to minimize rollovers and control the system more accurately and reliably. In addition to mechanical resistance, it is the logic and control equipment that decides the safety and reliability of any modern boiler. There are different types of processes in which the parameters must be checked in the specified range. So in this project we focused on some parameters, which are described below.

A. The boiler air flow can be a monitoring and control system (flow sensor)

B. Control and control of the forced draft fan (current sensor)

C. Humidity monitoring system (humidity sensor) For heavy oil fired boilers, the fuel needs to be heated to reduce viscosity and improve atomization.

Revised Manuscript Received on October 30, 2019.

* Correspondence Author

S. Jaisiva*, Associate Professor/ Department of EEE, IFET College of Engineering,Villupuram,Tamilnadu, India

V.Vijayabharathi, UG Student/ Department of EEE, IFET College of Engineering,Villupuram,Tamilnadu, India

P.Vel, UG Student/ Department of EEE,IFET College of Engineering,Villupuram,Tamilnadu, India

S. Saran, UG Student/ Department of EEE, IFET College of Engineering,Villupuram,Tamilnadu, India

Low fuel temp can result in incomplete combustion, unstable flame and backfiring. Fuel temp monitoring system should stop the burner firing below safe temperature. Since different process requires different operating temperature range,so in this as temp. Varied initially but using controller we maintained the temperature range. Keeping proper water level in the boiler is of paramount importance from boiler safety point of view. This instrument maintains necessary operating water level by controlling the water inflow.In this we are using level sensor which detects the level of the liquid in the boiler.Here we use two level sensors one is low level & other is top level,which show the lower liquid & higher liquid level, So that the liquid level can be maintained within a range. This will ensure availability of air for combustion. Unavailability/ shortage of air results in similar situations mentioned above. The burner should trip automatically in case in case air is not sufficiently available.So to control the pressure of air within a range specified for process,we use pressure sensor which will maintain the pressure level.

II. FLOW SENSOR

The air mass sensor measures the mass of air introduced by the engine ("mass of the air flow") with great precision. The signal produced by the air mass sensor is used to calculate the quantity of fuel and, in the case of diesel engines, also to check the exhaust gas recirculation. It is an important component both in the reduction of the discharge and in the supply of air. A defective or dirty air mass sensor can provide false input signals to the engine's central control unit, which in turn sends false information to other components. In the case of turbo diesel engines, the air mass sensor is subjected to particularly high loads due to the fact that both the air flow rate and the air speed are very high.

Fig.1.Flow Sensor

III. CURRENT SENSOR

They provide economical and precise solutions for the detection of AC or DC current in industrial, commercial and communication systems. Typical applications include motor control, load sensing and management,

Switching power supply and overcurrent protection. The device consists of a precise linear Hall sensor circuit, at low offset, with a conduction path in copper located near the surface. The accuracy of the device is

optimized thanks to the close proximity of the magnetic signal to the Hall transducer. A precise and proportional voltage is provided by the low offset, stabilized by the chopper, which is programmed for accuracy after packaging. When a growing current flows through the conduction path of the primary copper (from pins 1 and 2 to pins 3 and 4), which is the path used for current detection. The internal resistance of this conductive path is 1.2 mΩ typical, with a low power loss. The thickness of the copper conductor allows the device to survive up to 5 × overcurrent conditions. The conductive path terminals are electrically isolated from the sensor leads (pins 5 to 8). This allows the current sensor to be used in applications that require electrical isolation.

IV. HUMIDITY SENSOR

The relative humidity sensor module is composed of a capacitive humidity sensor, a CMOS capacitor to the frequency converter and an EEPROM used to contain the calibration factors. Due to the characteristics of the condenser type humidity sensor, the system can react to very rapid changes in humidity. Each sensor is calibrated twice in two different precise humidity chambers, two unique modules related to the sensor are stored on the EEPROM on the module. The data is used to calculate the humidity.

FEATURES

- Relative humidity sensor
- Two calibrated points with condenser type sensor, excellent performance
- Type of frequency output, easily integrated with the user's application system
- Very low energy consumption
- No additional components needed

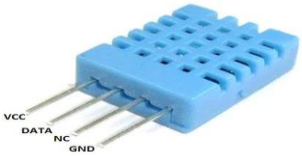

Fig 2.Humidity Sensor

V. LCD

The data from the environment will be measured by the sensor and the Data that are collected will be sending to the receiver. The data that has been read will be displayed on the LCD screen.

LCD 16x2:

A liquid-crystal display (LCD) is a flat panel display, electronic visual display, or video display that uses the light modulating properties of liquid crystals. LCD displays utilize two sheets of polarizing material with a liquid crystal solution between them. An electric current passed through the liquid causes the crystals to align so that light cannot pass through them. Each crystal, therefore, is like a shutter, either allowing light to pass through or blocking the light.LCD (Liquid Crystal Display) screen is an electronic display module and find a wide range of applications. A 16x2 LCD display is very basic module and is very commonly used in various devices and circuits. These modules are preferred over and other multi segment LEDs.

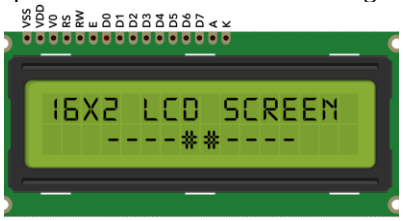

Fig.3. LCD

VI. RASPBERRY PI

The Raspberry Pi is not a single specific computer. Rather, it is a family of single board computers (SBC). Each SBC has different properties and capabilities. The first iteration of Raspberry Pi - the model 1 A - had a single-core ARM processor, 256MB RAM, 1 USB port, composite video out, HDMI output, and no networking capabilities. The latest model, the Raspberry Pi 3 model B, contains a quad-core processor, 1GB RAM, four USB ports, ethernet, in-built Wi-Fi, and a 40-pin header for controlling external circuits.Simply a special computer device used for industrial control system. They are used in many industries such as oil refineries, manufacturing lines, conveyor system and so on. The components that make a raspberry pi work can be divided into four core areas.

The raspberry pi consist of input voltage of 90 to 264VAC with frequency range 47 to 63 HZ.

Fig.4. Raspberry pi

FEATURES

- Low price
- Low power
- High availability
- High reliability
- Tested on millions of Raspberry Pis produced to date
- The IO pins of the module have a hard browning of 35u

VI. EXISTING SYSTEM

The existing system performs better than the manual system. The main advantages for the system are that it can be targeted towards a small target and then feedback data inaccurately to the control system. However, the controller is the sensors must be maintained correctly and regularly as they behave in dangerous conditions but the operationthe speed is slightly low. So in this existing project some parameters are monitored and controlled using different sensorsfrom the PIC controller, in order to produce an effective product through the process using the boiler

system. And all the parameters are checked in order of values.

BLOCK DIAGRAM

In our proposed system In this hardware description the mainly in our project the hardware are interfaced with raspberry pi microcontroller that is processor we are using microcontroller raspberry pi .In this raspberry pi we are connected this sensor first flow sensor, humidity sensor, oxygen sensor, current sensor. This sensors are interfaced with the raspberry pi. According to the input of the sensor the output to be increasing the air intake and decreasing the air intake that is called FD fan speed in this hardware section. All the sensor input are connected to raspberry pi the output again feeded to the speed of the motor. The raspberry pi is supplied by the 5V Supply and the software is python based language. In this language we return a program and it feed into the raspberry the output will be measured.

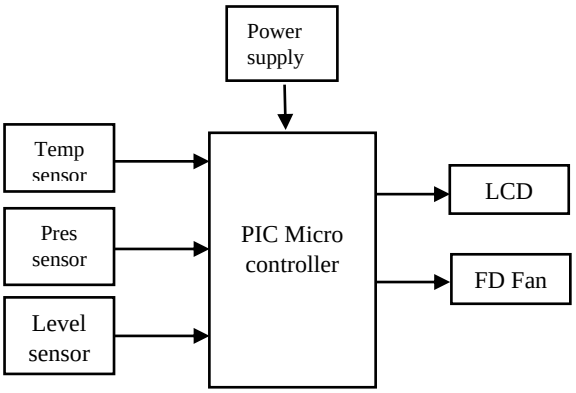

Fig.5. Block Diagram With Pic Microcontroller

DRAWBACKS OF EXISTING SYSTEM

- Low operating speed.
- Component failure.
- Highly reliable power circuits are required.
- Single operation to be monitored.
- Need high maintenance.

REGULATOR:

Regulator has been interfaced with the different sensor with respective regulator to be connected. Regulator will be used for the development of the prototype using the regulator are vary the input quantity of the sensor. If we increase the quantity range controlling action has been coming play role we decrease the quantity play role based upon the changes in the regulator automation to be takes place in the system.

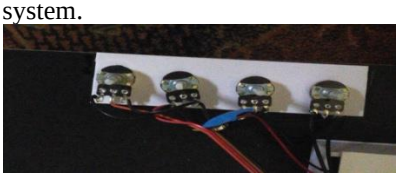

Fig.Regulator

VII. PROPOSED SYSTEM

In this hardware description, mainly in our project, the hardware is interfaced with the raspberry pi microcontroller this is the processor that we use raspberry pi microcontrollers. In this raspberry pi we are first connected to this sensorflow sensor, humidity sensor, oxygen sensor, current sensor. These sensors are interfaced with the raspberry pi. According to the sensor input, the output increases the air intake and decreases the air intake called FD fan speed in this hardware section. All sensor inputs are connected to the raspberry pi again powered at motor speed. The raspberry pi is provided by 5V Supply and the software is based on Python language. In this language, we return a program and it is inserted in the raspberry to measure the output.

BLOCK DIAGRAM

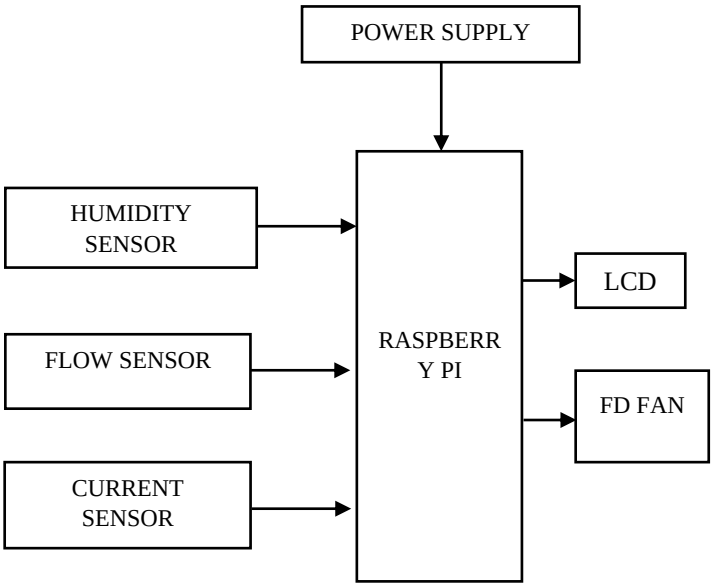

Fig. 6. Block Diagram With Raspberry Pi Microcontroller

BENEFITS OF THE PROPOSED SYSTEM

- Efficient operation.
- Requires low power.
- Automatic control
- It takes up less space
- Maintenance is not required

VIII. RESULT

The coal to be daily utilised by the thermal power plant before they can be stored in the coal storage is a bunker. At any emergency condition the conveyor will be stopped coal has been taken from the coal storage yard.We developing the projects for remove the bunkers from the thermal power plants because the rainy season, coal humidity will be increased. So the efficiency of the plant to be decreased and life time of the equipment also reduced.From this difficulty, we can ready the prototype for remove the moisture content in the coal by vary the forced draught fan speed to improve the efficiency and life time equipment. This control will be taken by the controller of using a latest version of raspberry pi for reliable operation in the system.And this raspberry pi has more number of ports to interfacingthe many peripheral devices to be connected with the controller. Coding of the controller will be using different types of language be coded we have code a python based language in the controller.

IX. CONCLUSION

Raspberry pi are well-adaptable to a range of automation tasks. Raspberry pi incorporated for any existing system which required for automation. As an endeavor to this effect, we tried our level best to incorporate raspberry technology in parameters monitor system for its all operations. We are successful in accomplishing this task and in this way; we gained knowledge about using raspberry pi system in an industrial environment.The boiler operation was satisfactory and the controlling action appropriately. This system is cost effective and accurate results can be obtained. The system implemented for the boiler automation and can be used in any application. Further system will be interfaced with the LCD.

Future Scope: Improvements to these existing system operations are implemented by eliminating the old monitoring system, introducing different types of sensors for condition-based monitoring. Similarly, it is possible to introduce further improvements by introducing very fast and automatic operations.

REFERENCES

1. S.Kalaivani, M.Jagadeeswari“ PLC& SCADA Based Effective Boiler Automation System for Thermal Power Plant” International Journal of Advanced Research in Computer Engineering & Technology (IJARCET) Volume 4 Issue 4, April 2015.
2. K. Gowri Shankar “ Control of Boiler Operation using PLC – SCADA” Proceedings of the International MultiConference of Engineers and Computer Scientists 2008 Vol II IMECS 2008, 19-21 March, 2008.
3. Sunil P. U, Jayesh J Barve, P S V Nataraj, “Boiler drum level control using QFT”, 2013 Nirma University International Conference on Engineering, NUiCONE-2013, 28-30 November 2013.
4. Aleksandar I. Ribic, “Functional and dynamical model of drum type boiler steam pressure and experimental verification”.
5. Shital S. Chopade, PradhumanVerma, PrashantVerma, “Simulation of Boiler Control using PLC & SCADA,” (IJEAT) ISSN: 2249 – 8958,Vol. 3, Issue-3, December 2013.
6. T.Karuppiah, Sivasankaran V, Azha ,Periasamy, Dr. S. Muruganand, “Embedded System Based Industrial Power Plant Boiler Automation Using GSM Technology,” IJARCCE , Vol. 2, Issue 8, 2013.
7. AnabikShome, Dr.S.Denis Ashok ―Fuzzy Logic Approach for Boiler Temperature & Water Level Control‖ International Journal of Scientific & Engineering Research, Volume 3, Issue 6, June-2012.
8. K. Ghousiya Begum Mercy D, KirenVedi H, Ramathilagam V ―An Intelligent Model Based Level Control of Boiler Drum‖ IJETAE Volume 3, Issue 1, January 2013.
9. Chuntanman, JiaLi,LanyingWang,Yantao Chi, “The fuzzy PID control system for superheated steam temperature of boiler‖,” StrategicTechnology (IFOST) , IEEE International Conference ,Vol. 2, pp. 967-970, 2011.
10. Aleksandar I. Ribic, “Functional and dynamical model of drum type boiler steam pressure and experimental verification”.
11. Mr. AbhishekVichare, Ms.ShilpaVerma “Embedded Web Server for HomeAppliances”, International Journal of Engineering Research and Applications (IJERA) ISSN: 2248-9622 National Conference on Emerging Trends in Engineering & Technology (VNCET-30 Mar’12).
12. Mo Guan and MinghaiGu “Design and Implementation of an Embedded Webserver Based on ARM”, 2010 IEEE Mr. Vijay Bhamrae&Mr.Chirinjeevi “CAN based real time implementation in automobile using ARM” (IJARCET) Volume 2, Issue 3, March 2013.