International Journal of Engineering and Advanced Technology (IJEAT)
ISSN: 2249-8958 (Online), Volume-8 Issue-6, August, 2019

ANN Controller for Damping of Oscillations using Interline Power Flow Controller of AC Transmission System

Ch.Venkata Krishna Reddy, K.Krishna Veni, G.Tulasi Ram Das

Abstract*: Interline Power Flow Controller is series compensating device for series compensation of Active and reactive power with distinctive ability of power flow management between many transmission lines in power network. During disturbances in power system, the stability of system causes deviation from stable operation and causes variation in different parameters of power system like load angle and Rotor speed. To suppress oscillations in load angle and rotor speed, the Artificial Neural Network (ANN) controller with IPFC is proposed to increase the stability of power network. IPFC with ANN is considered for analysis of IEEE 14 Bus system. For different fault conditions analysis is carried out using MATLAB/Simulink.

Index Terms*: Flexible AC Transmission System, Interline Power Flow Controller, Voltage Source Converter, Stability, Artificial Neural Network controller, load angle, Rotor speed.

I. INTRODUCTION

Present large power networks are experiencing large variation in loads leading to stability of the system. In addition to this, if any disturbance occurs in any part of the system, stability will be altered. Generally the frequent faults takes place in transmission lines rather than faults at remaining parts of power systems. The disturbances occur in transmission lines causes deviation in normal operation of other parts of power systems like Generators, turbines, governors etc. The deviation in normal operation of system causes instability of power system in terms of oscillations in load angle and rotor speed [1].

To overcome such drawbacks, embedding Flexible AC Transmission System (FACTS) controllers in power system plays an important role and offers good control and satisfactory performance. Hingorani [2] proposed thyristor based FACTS technology for application in power systems to improve the performance under disturbances. With advent of high power electronic devices, converter based FACTS technology is finding improved application.

Revised Manuscript Received on October 30, 2019.
* Correspondence Author
Ch.Venkata Krishnsa Reddy*, EEE**,** CBIT, Hyderabad, India.
K.Krishna Veni, EEE**,** CBIT, Hyderabad, India.
G.Tulasi Ram Das, EEE, JNTUH**,** Hyderabad, India

Gholipoura et al. [3] carried out with IPFC in Iran transmission network using dynamic performance of the controller is improved by ANFIS to suppress damping of oscillations. In this paper, in IEEE 14 bus system IPFC with ANN controller is connected in the middle of buses 1 and 12.when different faults occur in system between buses 7 and 8, IPFC will damp the power oscillations. Artificial Neural Network (ANN) controller based IPFC is designed [4] and its performance under disturbances in damping oscillations is tested using IEEE 14 bus multi machine power system [5].

II. SYSTEM CONSIDERED TO STUDY THE PERFORMANCE OF IPFC

IEEE-14 bus system [5] as shown in Fig 1, is considered to studying the performance of IPFC, under disturbance conditions.

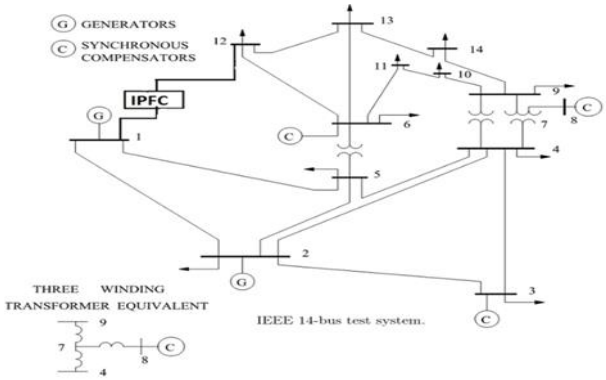

Fig.1 IEEE 14 Bus Power System With IPFC

III. INTERLINE POWER FLOWCONTROLLER

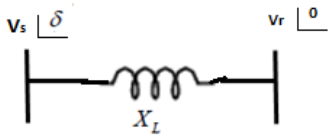

Fig.2 a. simple PS model

Usually the power lines are inductive in nature as its resistance is too lesser related to inductive reactance. Therefore $|Z| = X_L$ and $\theta = 90^0$ .Hence sending end real power to be transferred is given by

$$P_{s1} = \frac{V_s V_r}{X_L}\sin(\delta) = \frac{V^2}{X_L}\sin(\delta) \quad (1)$$

Here Vs = sending end voltage, Vr = receiving end voltage, δ = phase difference between sending and receiving end voltages.

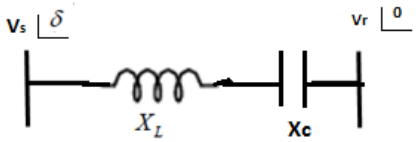

Fig.2.b. PS model with Xc

When series converter injects voltage in quadrature with transmission line current, it can simulate inductive or capacitive reactance in the line. Consider Equation (1) and assume that the series converter injects voltage into the transmission line so as to simulate capacitance effect. Consequently the net reactance of the line is condensed and power transmission efficiency is good.

$$P_{s2} = \frac{V^2}{X_{L-X_c}}\sin(\delta) \quad (2)$$

The increased power transfer is determined by

$$\frac{P_{s2}}{P_{s1}} = \frac{X_L}{X_{L-X_C}} = \frac{X_L}{X_L\left(1-\frac{X_c}{X_L}\right)} = \frac{1}{1-K} \quad (3)$$

Where K = Degree of compensation percentage (%)

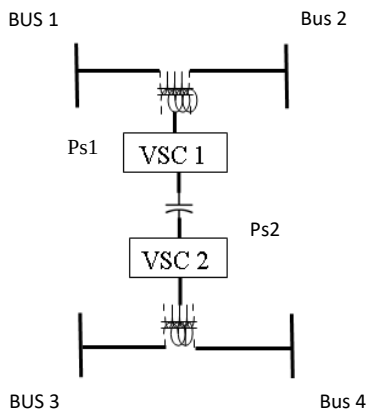

Fig 3 .Interline power flow controller (IPFC)

The IPFC consists two VSCs via a dc link. The VSC 1 and VSC 2, shown in Fig. 3 converts DC to AC, provides series compensation for transmission lines. The dc-to-ac converters are series connected through dc link and are connected to transmission lines via coupling transformers. This series connection has a common dc linkHence this IPFC inject reactive and active power in multiline power network consecutively; it damp out oscillations by DC link[6]. The DC link parameters of IPFC used in present power system are V_{dc} = 1.4e^{5}and C_{dc}= 1000e^{-3}. The controller structure for present power system using IPFC for stability analysis is displayed in Fig.4. The MATLAB/SIMULINK illustration of IEEE 14 bus power network using IPFC with fault location is shown in Fig.5.

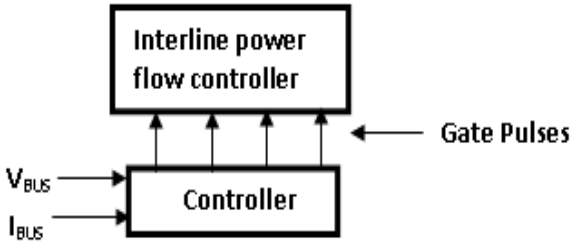

Fig. 4 Controller Structure With IPFC

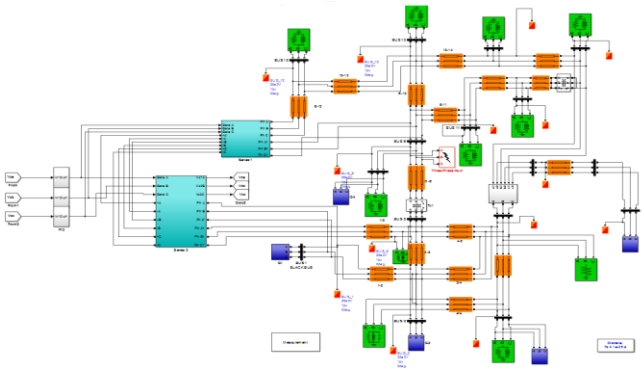

Figure. 5 Power system with IPFC using MATLAB/SIMULINK .

IV. ANN CONTROLLER

ANN imitates the biological nervous system to perform the tasks on the input data. To solve highly complex tasks such networks are widely used. It consists of input, one or two hidden and output layers. Training of the neural network is controlled by specific leading inputs to achieve the target. Providing multiple instances of inputs to train the network helps it to yield better results. The weights in the network are adjusted until the desired output equals the actual output. The difference between the desired and the actual outputs leads to error. This error is backpropagated to adjust the weights in the network. Such trained networks are used in the testing phase to evaluate the unknown inputs. In the current study, Back propagation algorithm is used to reduce oscillations and they quickly dampen after training [7]. The control strategy used for ANN controller is shown Fig. 6. Here the V_{ref} is related with corresponding bus voltage and the error

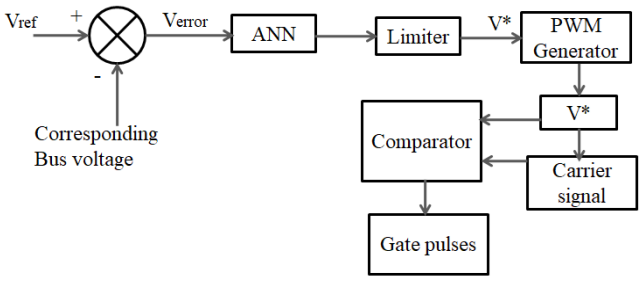

Fig 6. Block Diagram For Control Strategy For ANN Controller

found, V_{error}, is applied to ANN control block. The limiter output V^* is fed to the PWM generator. The PWM generator output is compared to the carrier signal using a comparator, to obtain desired gate pulses used for IPFC.

The M-file program for ANN controller is depicted in Fig.7.a. The subsystems of ANN controller are shown as subsystem -1 and subsystem -2 in Fig.7.b and Fig.7.c respectively. The hidden layers involved in ANN control are shown as subsystem -3 In Fig.7.d.

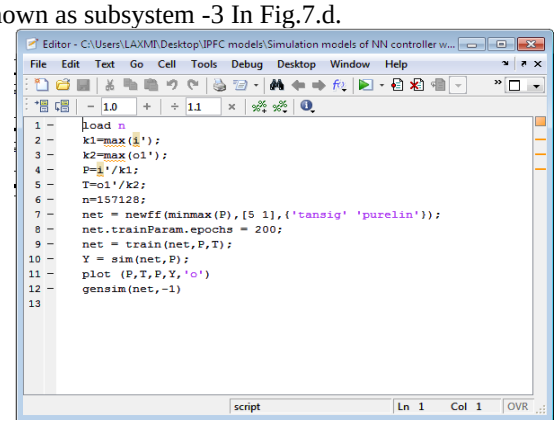

Fig 7.a M-file Program For ANN Controller

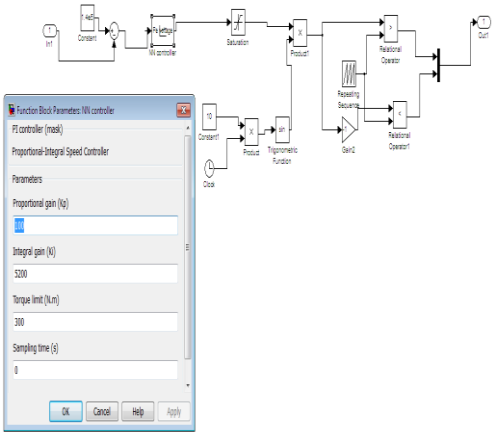

Fig 7.b Subsystem-1 Of ANN Controller

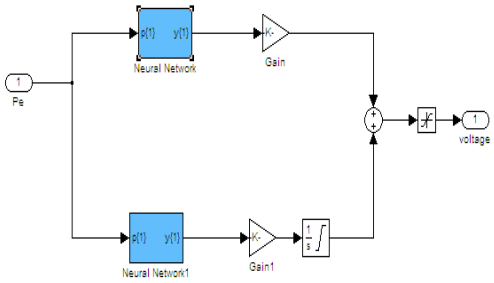

Fig 7.C. Subsystem-2 Of ANN Controller

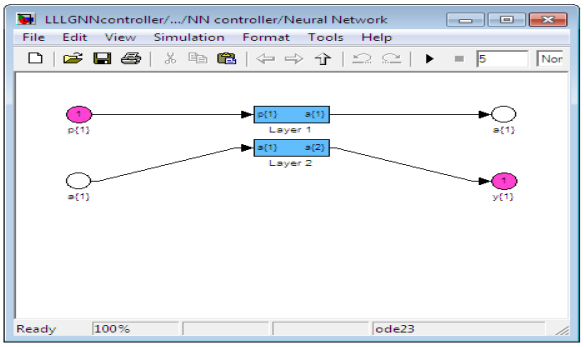

Fig 7.D. Subsystem-3 Of ANN Hidden Layers

V. SIMULATION RESULTS

The examination is done with simulation using MATLAB/Simulink. The study is carried to find the effectiveness of IPFC in damping the oscillations using ANN controller for various faults[8].

Results obtained for load angle (load angle vs time) for the three faults with IPFC using the ANN controller are shown in Fig. 8, 9 and 10. Similar analysis is done for rotor speed (rotor speed vs time) for the three faults with IPFC using the ANN controller are also shown in Fig.11 to Fig.13.

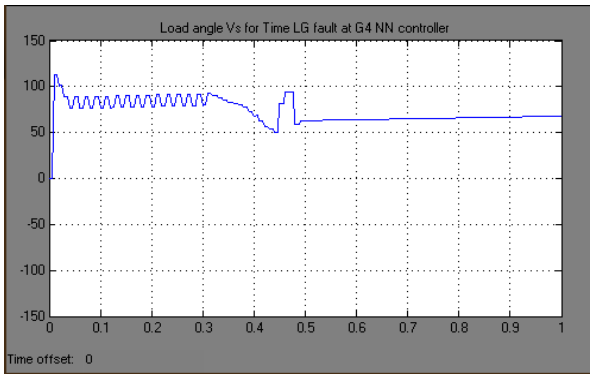

Figure 8. Load Angle Vs Time, LG Fault At G4 With IPFC Using ANN

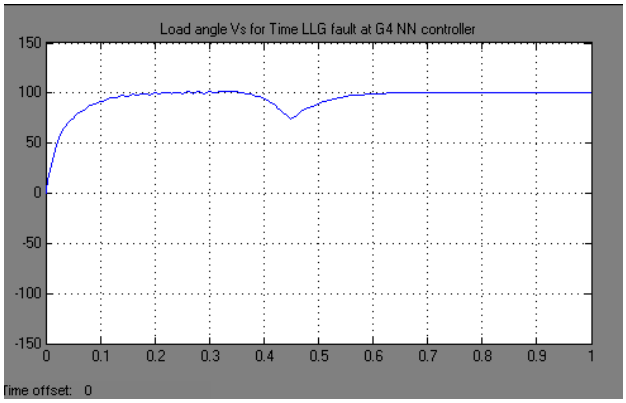

Figure 9. Load Angle Vs Time, LLG Fault At G4 With IPFC Using ANN

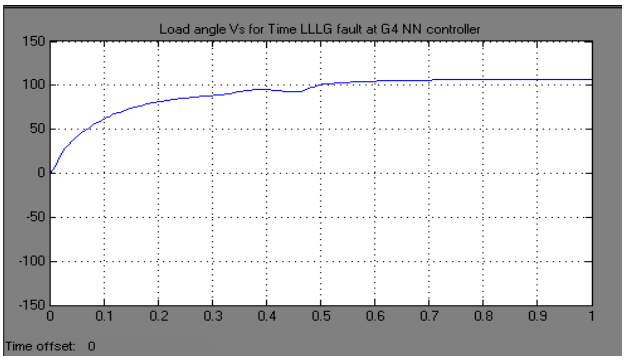

Figure 10. Load angle Vs time, LLLG fault at G4 with IPFC using ANN

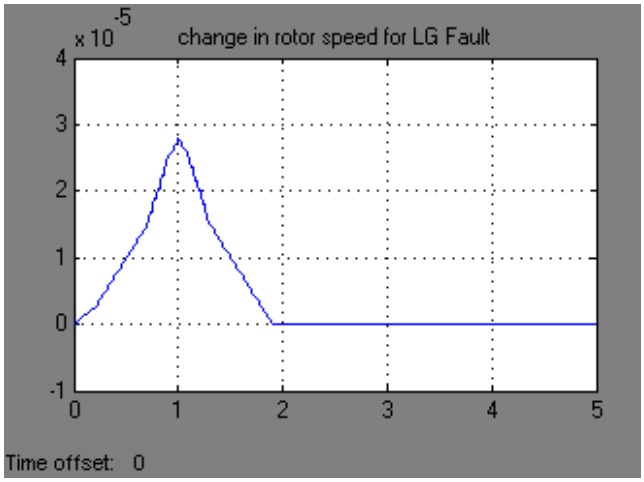

Fig 11. Change In Speed(Rotor Speed Vs Time) For LG Fault With IPFC Using ANN

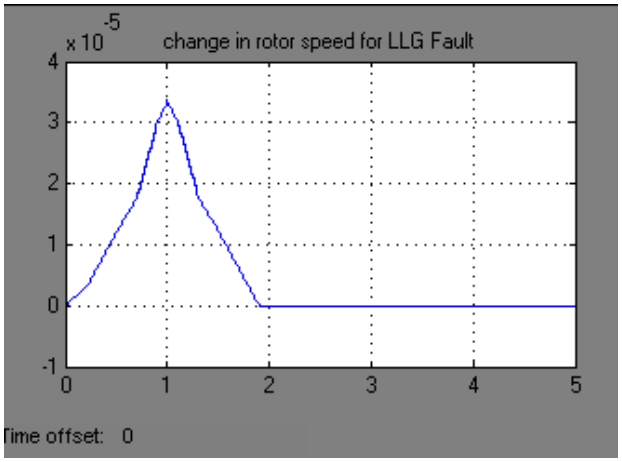

Fig 12. Change In Speed(Rotor Speed Vs Time) For LLG Fault With IPFC Using ANN

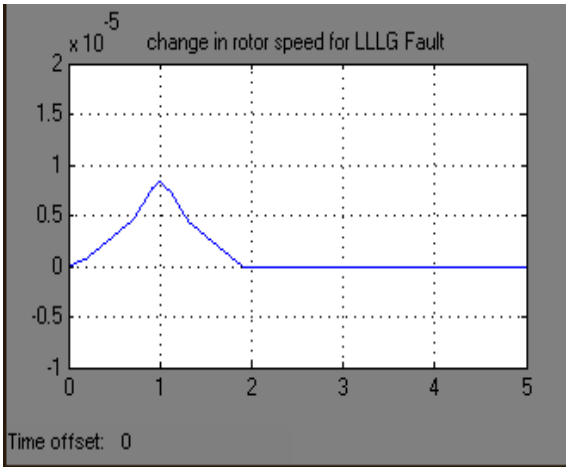

Fig 13. Change In Speed(Rotor Speed Vs Time) For LLLG Fault With IPFC Using ANN

The results for Change in speed(rotor speed vs time) are compared with results obtained for all faults without IPFC [9]. Hence from fig 11, 12, 13 it is observed that ANN controller for all faults damped the oscillations using IPFC and hence it improves stability of the system.

Further analyzed for other generators with IPFC using ANN logic controller for all the three faults and are tabulated in Table I to Table III.

Table-I: Results For All Generators During LG Fault With IPFC Using ANN Controller

Generator No	Rotor angle		Rotor speed (rad/sec)	
	Settling time (sec)	Amplitude of oscillations (degrees)	Settling time (sec)	Amplitude of oscillations
1	1.123	65	2.5	1.18e-5
2	2.862	82	3.2	3.2e-5
3	1.62	116	0.85	2.56e-5
4	0.48	15	1.75	0.8e-5
5	2.2	22	2.1	0.48e-5

Table-II: Results For All Generators During LLG Fault With IPFC Using ANN Controller

Generator No	Rotor angle		Rotor speed (rad/sec)	
	Settling time (sec)	Amplitude of oscillations (degrees)	Settling time (sec)	Amplitude of oscillations
1	3.23	72	0.95	2.28e-5
2	0.8	0.4	1.65	0.9e-5
3	1.1	8.2	2.23	3.2e-5
4	0.65	10.2	1.76	2.75e-5
5	0.47	11	1.71	0.9e-5

Table-III: Results For All Generators During LLLG Fault With IPFC Using ANN Controller

Generator No	Rotor angle		Rotor speed (rad/sec)	
	Settling time (sec)	Amplitude of oscillations (degrees)	Settling time (sec)	Amplitude of oscillations
1	3.23	72	0.95	2.28e-4
2	1.82	89	3.2	0.5e-5
3	1.62	41	2.25	1.15e-5
4	0.8	6.7	1.77	3.32e-5
5	0.8	0.4	1.65	0.9e-5

The results in table I to Table III are compared with results of without IPFC [9] for all the three faults in connection with rotor angle and speed. Hence from Table I and Table II it is noticed that, rotor angle in amplitude and settling time are affected. From Table III, it is perceived that the rotor angle in amplitude and settling time are improved.

Therefore, IPFC control both load angle and rotor speed in terms of amplitude of oscillations and settling times for different faults.

VI. CONCLUSION

During faulted period, load angle of the machine increases and during post fault period decreases. For balanced and unbalanced faults with IPFC of a system the settling time is low for the load angle. During faulted period, machine speed increases and during post fault period decreases. For balanced and unbalanced faults with IPFC of a system the settling time is low for the rotor speed.

Hence, it is concluded that the IPFC controller be responsible for superior damping of load angle and speed deviations. ANN based IPFC system, provided superior results there by decreasing the disturbances in the power angle and also after fault settling time also reduced by a considerable amount and the system stabilizes rapidly.

REFERENCES

1. P. Kundur et al., "Definition and classification of power system stability IEEE/CIGRE joint task force on stability terms and definitions', IEEE Transactions on Power Systems, vol. 19, no. 3, pp. 1387-1401, Aug. 2004.
2. G.Hingorani and L.Gyugi, 'Understanding FACTS: Concepts and Technology of Flexible AC Transmission Systems," IEEE Press, 1999.
3. E.Gholipoura, GH.Isazadeh, 'Design of a new adaptive optimal wide area IPFC damping controller in Iran transmission network', International Journal of Electrical Power & Energy Systems, Volume 53, December 2013, pp. 529-53915
4. SheelaTiwaria, RamNaresh, bR.Jhaa,' Neural network predictive control of UPFC for improving transient stability performance of power system', Applied Soft Computing, Volume 11, Issue 8, December 2011, pp. 4581-4590.
5. Sameh Kamel Mena Kodsi, Claudio A. Canizares "Modeling and simulation of IEEE 14 bus system with FACTS controllers', Technical report 2003; 3.
6. T. Kerdphol,K.Hongesombut,Y. Weerakamaeng, 'Robust Interline Power Flow Controller Design for Damping of Low Frequency Oscillations in Power System with Wind Power Sources, International Review of Automatic Control (IREACO),6(2). 2016.
7. Mahammad A Hannan et al, 'Artificial Intelligent Based Damping Controller Optimization for the Multi-Machine Power System: A Review',IEEE Access,Volume 6,2018.
8. Paul M. Anderson, "Analysis of Unsymmetrical Faults: Three Component Method," in Analysis of Faulted Power Systems, Wiley-IEEE Press, 1995, pp.36-70.
9. Ch. Venkata Krishna Reddy, G.Tulasi Ram Das, K.Krishna Veni, 'Analysis of AC Transmission System Using Fuzzy Logic Controller for Damping of Low Frequency Oscillations with Interline Power Flow Controller', International Journal of Applied Engineering Research, Scopus, Volume 14, Number 9, 2019, pp. 2148-2155

AUTHORS PROFILE

Ch. Venkata Krishna Reddy obtained his ME from Madurai Kamaraj University in the year 2000 and BE from Madras University in the year 1998. He guided many UG and PG projects. He has 10 publications to his credit. He worked as in-charge for various duties like NBA coordinator for UG and PG courses, Time tables and ISO. He also organized various workshops in the field of Electrical and Electronics Engineering. He is currently pursuing his PhD from JNTUH. His research areas are FACTS and Drives. He has 17 years of teaching experience. Presently he is working as Asst. Professor in Chaitanya Bharathi Institute of Technology, Hyderabad, India.

K. Krishnaveni obtained her PhD from JNTUH and also ME from JNTUH. Her research areas are FACTS and Drives. She has 24 years of teaching experience. She has many publications in reputed journals and guided PhDs. Presently she guiding seven PhDs. She guided many UG and PG projects**.** She is a reviewer for Journal of the Institute of Engineers (India): Series B, Springer. She delivered guest lecturers in many national and international workshops. She received grants from national agencies to organize workshops. She worked in various capacities like HOD. Presently she is working as Professor in Chaitanya Bharathi Institute of Technology, Hyderabad, India.

G.Tulasi Ram Das pursued his Ph.D. form IIT Madras with NIL (1991-2015) and M.E. in Industrial Drives & Control from Osmania University, Hyderabad with First Class (1983-1985). B.Tech. in Electrical & Electronics Engineering from Jawaharlal Nehru Technological University, Hyderabad with First Class (1978-1983). His areas of interest are Power Electronics, Electric Motors & Drives, Flexible AC Transmission Systems and Power Quality. He worked in various capacities like Principal, Registrar, Vice chancellor in JNTU. He received many research projects from different recognized agencies. He has many publications in reputed journals and guided many PhDs. Presently he is working as Professor in the Department of Electrical and Electronics Engineering, JNTUH.