International Journal of Engineering and Advanced Technology (IJEAT)
ISSN: 2249-8958 (Online), Volume-8 Issue-6, August, 2019

Design and Implementation of Multi Input Hybrid Solar Three Levels Converter Using IOT

T.Rampradesh, C.Christober Asir Rajan

Abstract*: Multi input converters are highly reliable and can be effectively used for hybrid systems. Here the performance of a dual input system is experimentally verified by powering it with a solar and a battery and the whole system is monitored using IOT. A DC to DC converter which can operate with two sources is designed to operate with two input DC sources and the output DC supply is converted to AC by an inverter module. Power IOT based monitoring system is the main scope of this project which is achieved using an ESP8266 Arduino core and GSM technique. High conversion efficiency, soft switching realization and simple architecture are achieved in this system. The simulation results is presented under various values of operating conditions. A scale down model was developed which is powered by a 3Wp solar panel and a 12 V battery. The performance of the system was verified with various input conditions and the system parameters were monitored using IOT and the data samples were obtained.

***Index Terms*: Multi-input dc/dc converter, Photovoltaic system, IOT, GSM.**

I. INTRODUCTION

Installation of Distributed systems is a vital solution to fulfill the electric power demand of the present scenario. Distributed systems operate with sources like solar, wind, fuel cells, etc., to generate electric power. These sources are not available throughout the day and cannot render a continuous output power to the power conditioning unit. Therefore a power conditioning unit that can operate with multiple sources is a solution to feed the utility with a continuous power. Also effective monitoring of the overall system is highly necessary to increase the reliability and also to switch the input sources to achieve continuous power output. Monitoring of the system also enables to form a closed loop structure and the power variations of the load can be overcome. Multi-input converters are cheap and can be used where multiple input sources are to be integrated. [1]-[5]. Many topologies are proposed and discussed before with many input and output with various conditions [6]-[7]. These converters offer a financially non affordable arrangement in applications which require different types of sources. Topologies with many inputs are proposed based on non-separable structures [8]-[9]. In [8], a non-secluded converter with many inputs and can perform boost and buck operation which has a similar switch is discussed. A comparative idea has been connected to bidirectional buck converter with four switches, where all the input sources to the inverter are connected together in parallel [9]. In [10], two lift converters are coupled in arrangement and an assistant circuit is utilized to accomplish delicate exchanging. A coordinated SEPIC and CUK converter with many input are accounted in [11]. In [12], an alternate view of exchanged capacitor converter has been accounted.

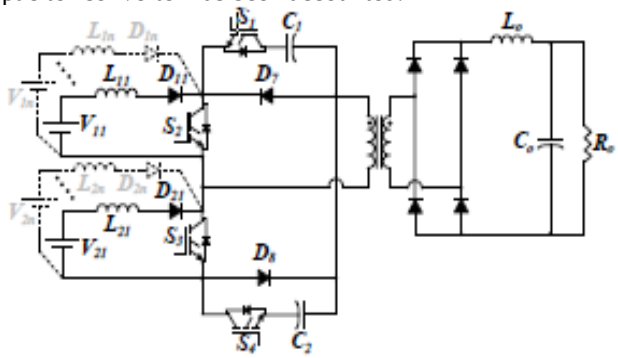

Fig.1. Circuit For Multi Input Three Level Converter

In [11], two differently operating full-connected converters are connected together in parallel to feed a typical yield amending diode-connect. The same can be replaced by utilizing singular yield correction and power sharing is done by incorporating a transformer [12]. In [13], a method based on two current booster spans are controlled simultaneously in a stage moved way. In [12], the association of cells with many input is first recognized as throbbing a source of voltage and next as a throbbing current-source cell. In [13], the method of connecting different types of sources in parallel to the input of the transformer primary connection is elaborately discussed. In this investigation, a converter operating with many input in light of three-level separated structure for sustainable power source frameworks is proposed with an IOT based monitoring system, as appeared in Fig. 1. Asper the various schemes proposed in [13], throbbing current-source are grouped and are connected in a similar fashion. The stress on the switches due to voltages is reduced by the three level isolated structure. The control strategy discuses here is same as that of discussed in [13]. The converter gives a less voltage over the upper and lower switches. The inductors are designed to operate in intermittent directing mode, to ensure self-ruling and forced sharing between the multiple input sources.

II. DUAL INPUT ISOLATED THREE-LEVEL DC/DC CONVERTER

A. Significance of dual input

The converter operates in rectifier mode is of three-level isolated dc to dc converter which can operate with two sources. The rectifier proposed here can be like a partially connected rectifier joined by tapped twisting for buck application, or a full-connect rectifier for loads which require a higher voltage.

Revised Manuscript Received on October 30, 2019.
* Correspondence Author
T.Rampradesh*, Associate Professor/ Electrical & Electronics Engineering, IFET College of Engineering, Villupuram, Tamilnadu, India.
C.Christober Asir Rajan, Professor/ Electrical & Electronics Engineering, Pondicherry Engineering College, India.

The lift inductors store the energy when Switch 2 (T_2) and Switch 3 (T_3) are turned on, separately. At a point when switches T_2 or T_3 is turned OFF, the accumulated energy in the inductor feeds the load. The dc connect capacitor feeds the remaining energy to the load. Meanwhile switch T_1 to switch T_4 are switched to deliver half of the source voltages +Vdc/2, – Vdc/2 and null voltage in the transformer primary connection. The analysis of the above operation shows the modification of the inclusion of two switches and lift diodes are removed and to obstruct the return current coming from the dc interface capacitors there is a addition of two diodes. All switches operate with a phase shift of 180 degrees. The duty cycle of all the switches at the centre should be fixed so as to permit freewheeling of current from the primary of the transformer. The dual input converter in rectifier mode is fed by DC source from a solar panel and a battery. MPPT is incorporated using a cuk converter, so as to withstand the changes of dc due to the intermittent nature of solar. The excess energy is stored in a battery and that charging and discharging takes place simultaneously. Each module is associated with the microcontroller. The microcontroller will send the information to the IOT which can be seen through GSM. Any deviation in the system operation is controlled by the GSM module and the same can be monitored by IOT.

B. Block diagram for proposed system

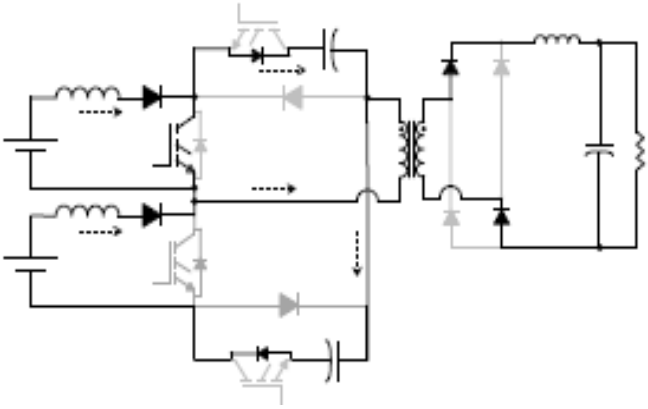

Fig.3 Mode 1 [t_0<t]

Mode 2 [t_0<t<t_1]: On the duration t = t_0, the inductor current L_1 is equal to the primary of the transformer. At this instant C_1 discharges the stored energy and energizes the load via the transformer's secondary. The current through capacitor C_2 is equal to the inductor current L_2.

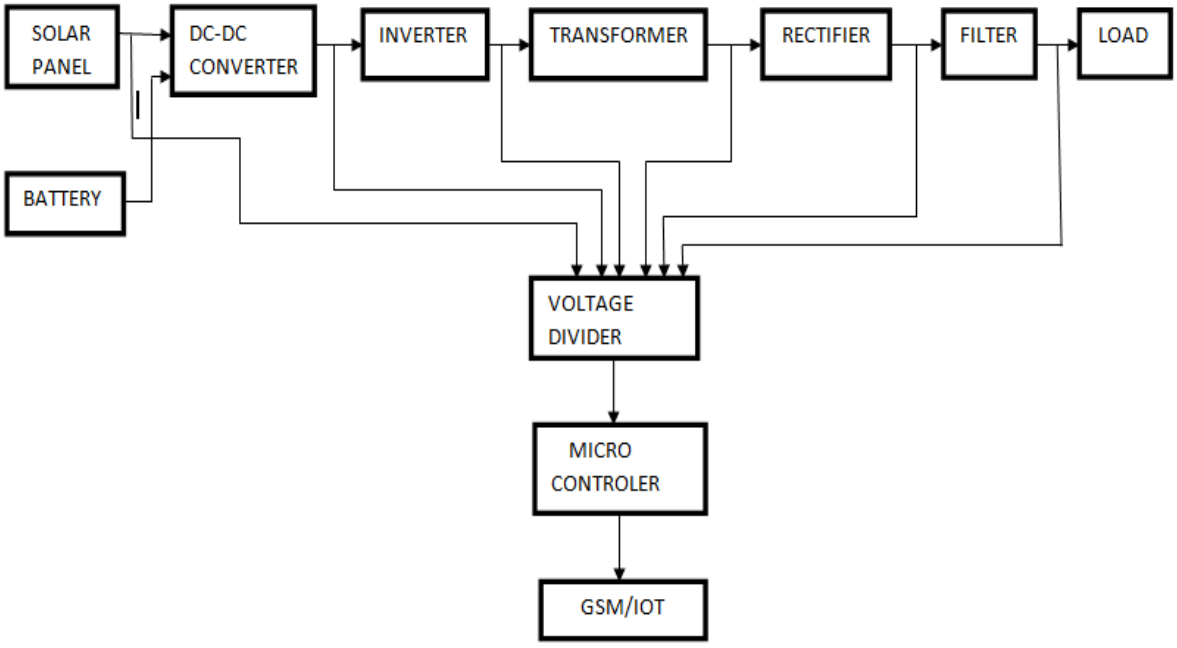

Fig.2. Proposed System

III. MODES OF OPERATION

Mode 1 [t<t_0]: Before the time t_0, switch T3 is OFF and switch T1 is ON. The energy stored in inductor L_2 is fed to the load through the trnaformer's secondary. The extra energy is fed from the inductor is fed to capacitor C_1 through the snubber diode of switch T1. The inductor current L_1 increments directly, under V1 and inductor current L_2 is used to charge the capacitor C. – Vdc/2 is connected to the primary of the transformer.

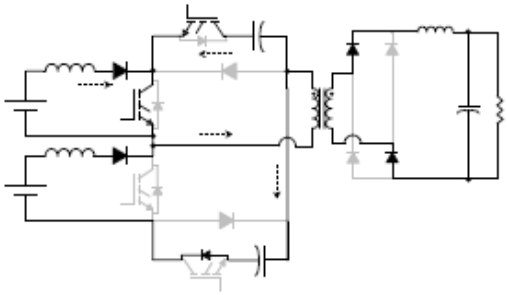

Fig.4. Mode 2 [t_0<t<t_1]

Mode 3 [t_1<t<t_2]: On the duration t = t1, the inductor current L_2 and capacitor current C_2 becomes zero. The load is fed only by the capacitor current C_1. The inductor current L_1 keeps on discharging and is affected by V_1.

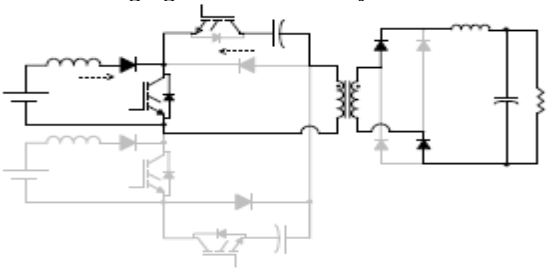

Fig.5. Mode 3 [t_1<t<t_2]

Mode 4 [t_2<t<t_3]: Here T1 is turned OFF. The current in the inductor turns ON diode D7. The votage across the primary of the transformer becomes zero due to freewheeling. The inductor voltage is equal to $-V_0$ therefore inductor current reduces proportionately and is equal to $-V_0$.

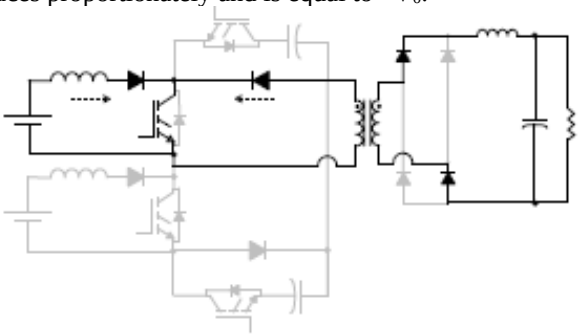

Fig.6. Mode 4 [t_2<t<t_3]

Mode 5 [t_3<t<t_4]: During the instant t = t_3, switch T3 is turned on, while T2 is kept on. The transformer voltage is zero due to freewheeling action. V_2 is connected across L_2, and inductor current increases directly.

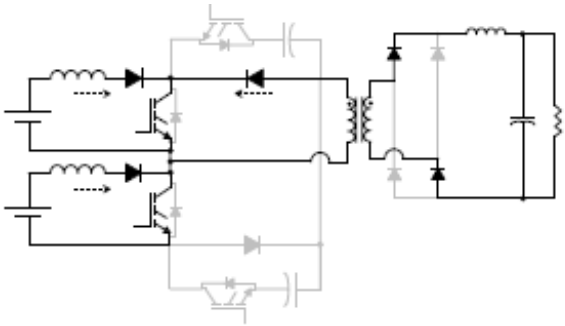

Fig.7. Mode 5 [t_3<t<t_4]

Mode 6 [t_4<t<t_5]: During the instant t = t_4, switch T2 is turned OFF. The load is energized by the combined energy stored in the inductor L_1 and capacitor C_1 collectively together. In this case the inductor current L_1 is less than the load current. Capacitor C_2 energises the load and half of the positive voltage Vdc/2 is connected to the transformer's primary. The current through the inductor L_2 keeps on discharging and is affected by V_2.

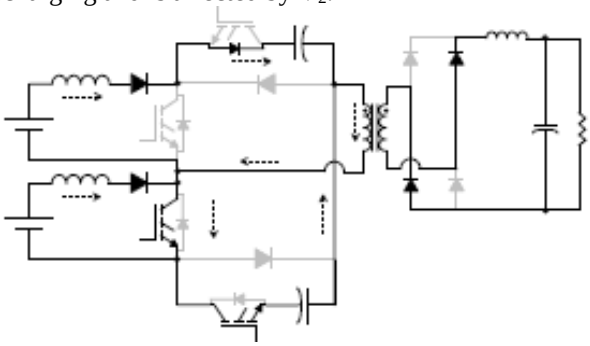

Fig.8 Mode 6 [t_4<t<t_5]

Mode 7 [t_5<t<t_6]: During t = t_5, Inductor L_1 totally discharges the energy stored in it. The load is energized by capacitor C_2.

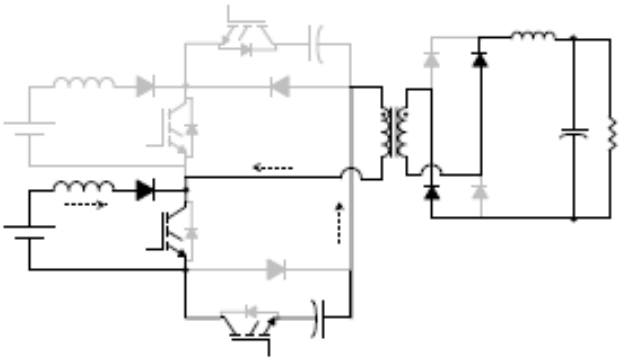

Fig.9. Mode 7 [t_5<t<t_6]

Mode 8 [t_6<t<t_7]: Here switch T4 is turned OFF. The inductor current turns on diode D8 and due to freewheeling zero voltage appears across the transformer.

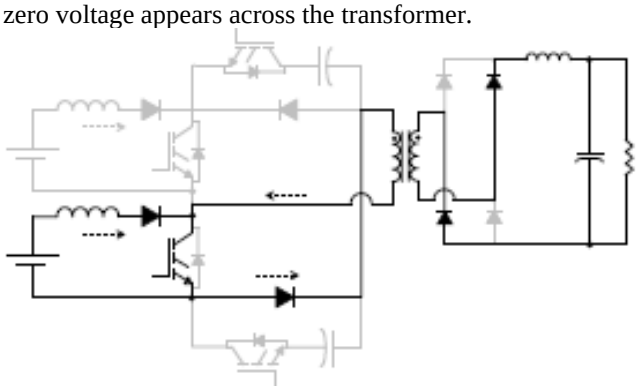

Fig.10.Mode 8 [t_6<t<t_7]

Mode 9 [t_7<t<t_8]: During the interval t = t_7, switch T2 is turned ON while switch T3 remain in ON state. The current in the transformer's primary flows through diode D8. The inductor currents of L1 and L_2 increase linearly.

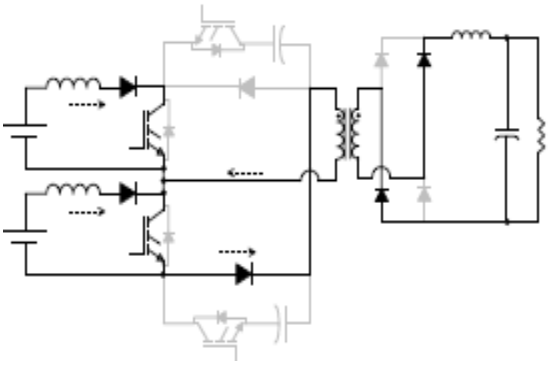

Fig.11. Mode 9 [t_7<t<t_8]

IV. SOFTWARE VERIFICATION

Simulation of the converter is performed and the output at various stages was verified. The model was tested for similar input voltages from the PV panel and different inductance and the different input voltage from the PV panel with similar inductance values. The parameters of the model to be simulated are $V_1 = V_2 = 150V$, $L_1 = 200\mu H$, $L_2 = 100\mu H$, $C_1 = C_2 = 100\mu F$, $L_0 = 330\mu H$, Switching frequency = 50 kHz. The output waveforms are shown from Fig.12 to Fig.18. The second arrangement of parameters are; $V_1 = 150V$, $V_2 = 50V$, $L_1 = L_2 = 100\mu H$, $C_1 = C_2 = 100\mu F$, $L_0 = 330\mu H$, Switching frequency = 50 kHz.

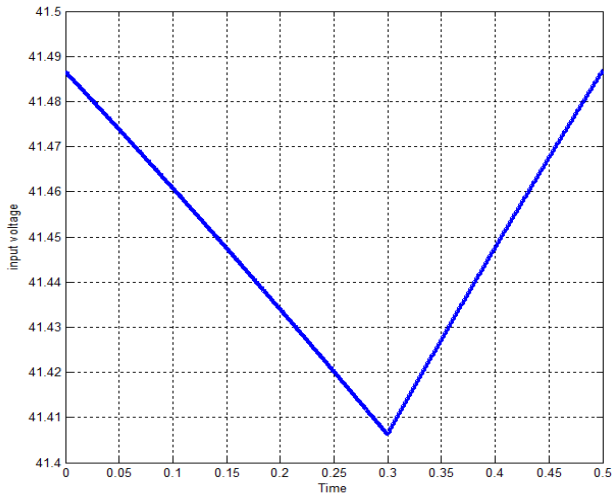

Fig. 12. Input voltage from solar panel

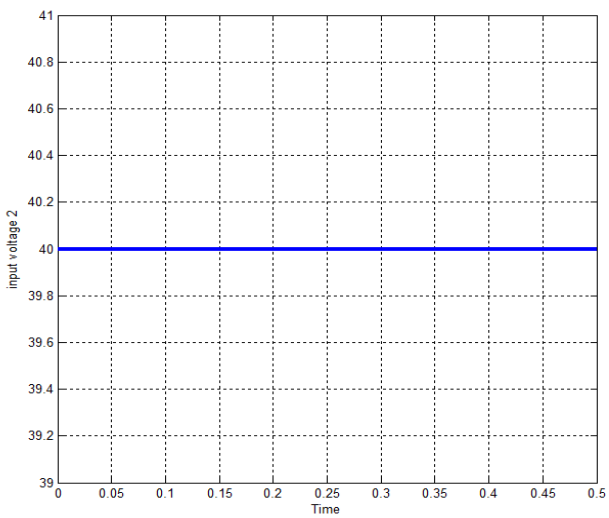

Fig.13. Input voltage from Battery

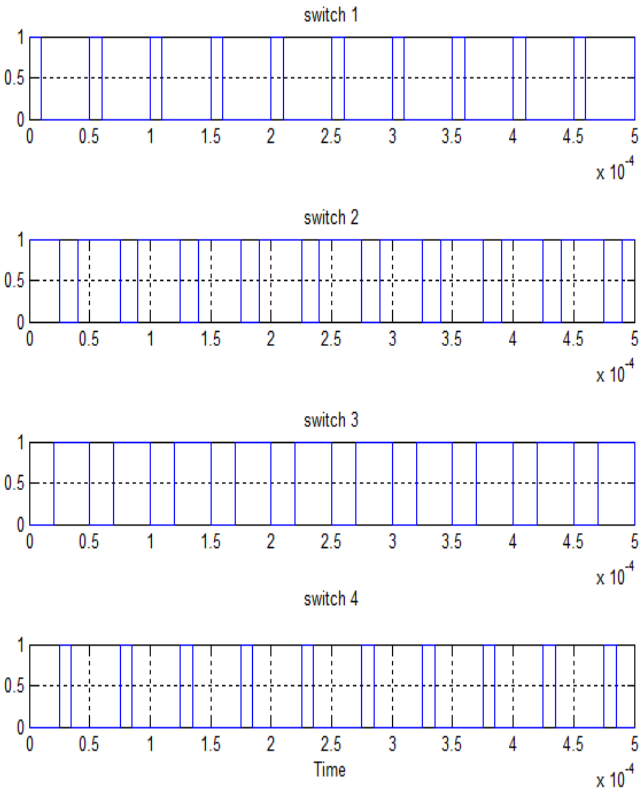

Fig.14. Pulses for MOSFET

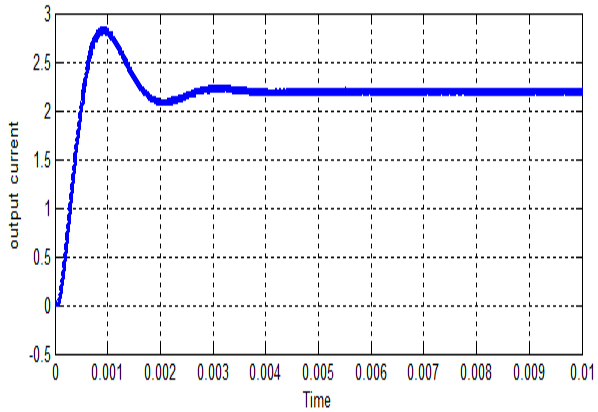

Fig. 15. Load current

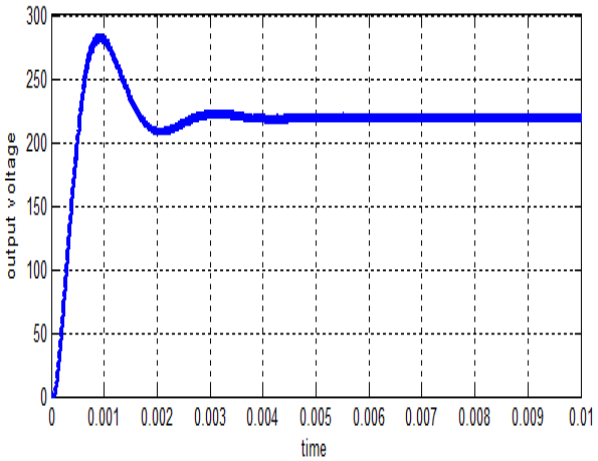

Fig. 16. Load voltage

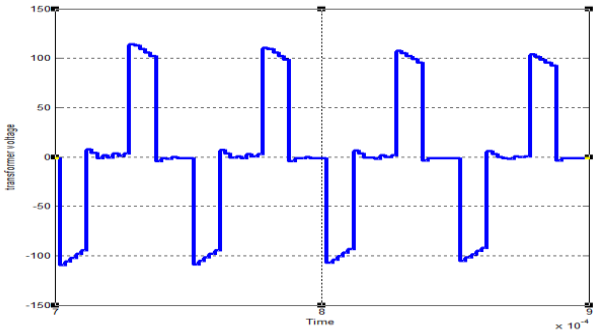

Fig.17. Transformer voltage

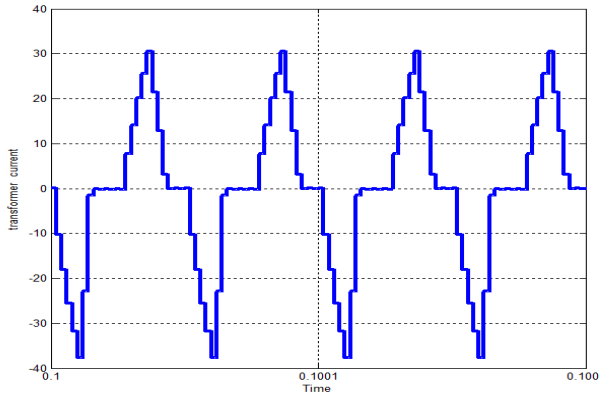

Fig.18. Transformer current Inference from output waveforms

Parameters	Range
Input voltage for solar	41.49 V
Input voltage for battery	40 V
Transformer output voltage	110 V
Transformer output current	30 A
Load voltage	275 V
Load current	3 A

V. EXPERIMENTAL VERIFICATION

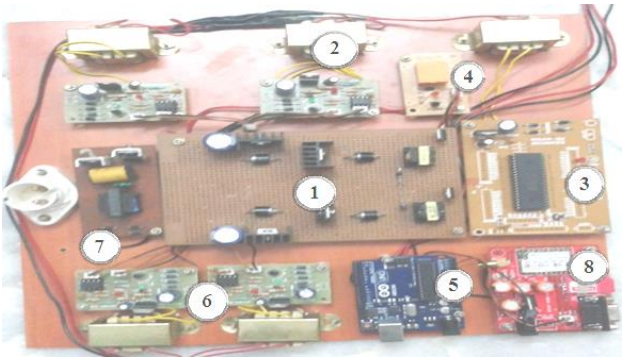

Fig.19. Scale down model of proposed system

Parts of the prototype

1. CONVERTER
2. TRANSFORMER
3. MICROCONTROLLER KIT
4. RELAY CIRCUIT
5. ARDRUINO
6. DRIVER CIRCUIT
7. RECTIFIER
8. GSM MODULE

Switching scheme

The pulses to the switches are given by the driver circuit module. The pulse diagram for each switch is shown from Fig. 20 to Fig. 23

For switch 1 the time on period is low and the time off period is high as shown in Fig.20.

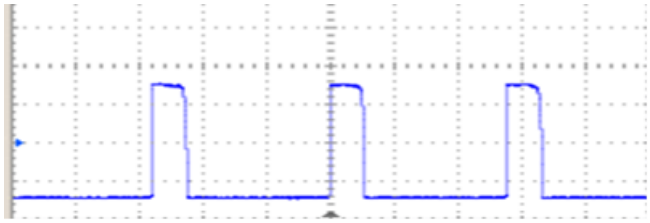

Fig.20. Pulses for switch 1

For switch 2 the time on period is high and the time off period is low as shown in Fig.21

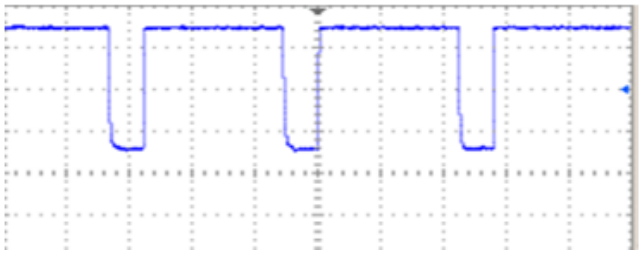

Fig.21. Pulses for switch 2

For switch 3 the time on period and the time off period is almost same as shown in Fig. 22

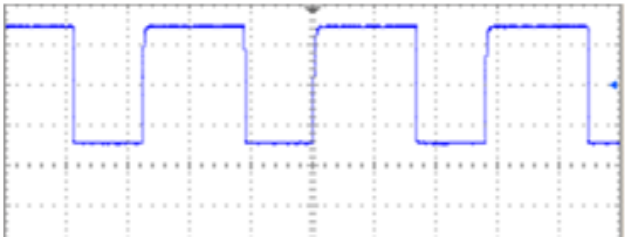

Fig.22. Pulses for switch 3

The time on period is low and the time off period is high. It is same as the switch 1 as shown in Fig.23

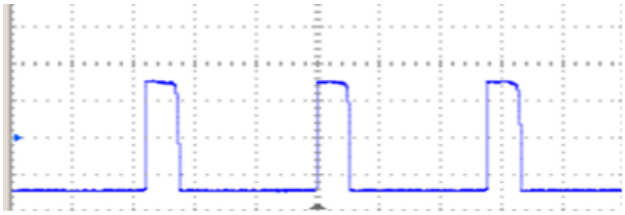

Fig.23. Pulses for switch 4

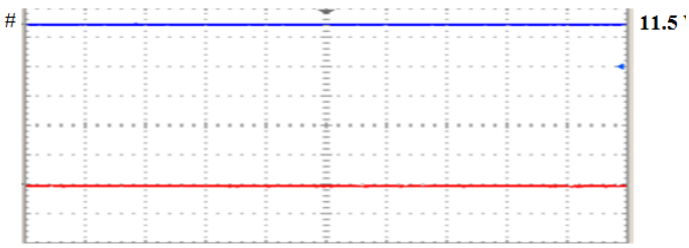

Fig.24. Input voltage from solar panel

The line symbolized with # indicates the input voltage for solar panel and the input voltage is 12V

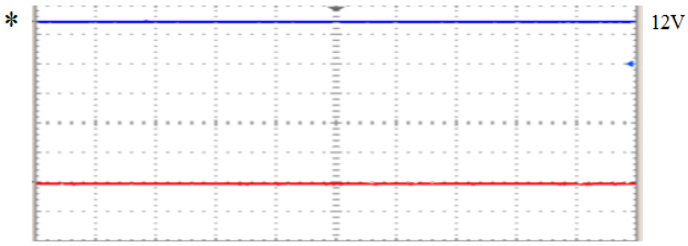

Fig.25. Input voltage from Battery

The line symbolized with * indicates the input voltage for solar panel and the input voltage is 12V

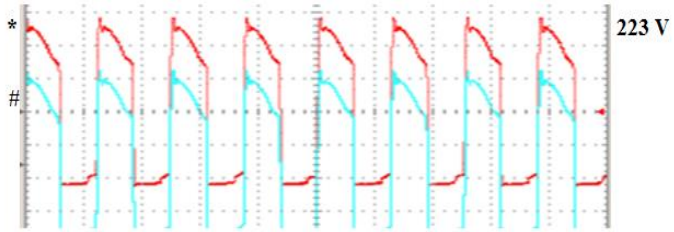

Fig.26. Output voltage waveforms to the load with solar and battery input

When both the battery and solar panel are feeding the converter an output voltage of 223 V is obtained. It tends to obtain a high bandwidth in the waveform and thus high voltage amplitude is be obtained.

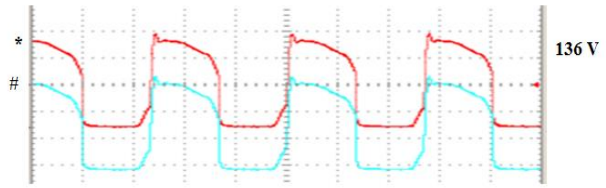

Fig.27. Output voltage waveforms on excluding the solar panel

During intermittent condition, the exclusion or disconnection of solar panel take place which leads to occurrence of disturbance at the hybrid system. The width of the waveform tends to reduce its amplitude size based on its disturbance.

MONITORING OF SIGNALS IN IOT WITH ARDUINO

The main scope of the project is to monitor the system using IOT. The arduino is programmed so as to monitor and collect the data of the system periodically. The user can view the performance of the system periodically from a particular place. Fig. 28 to Fig. 34 shows the sample data obtained from the Arduino module using IOT.

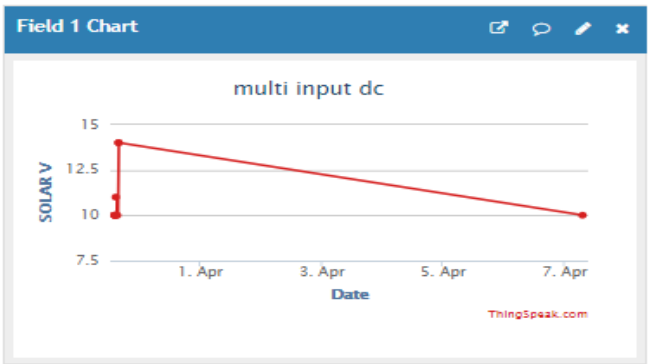

Fig. 28. Monitoring of solar input voltage

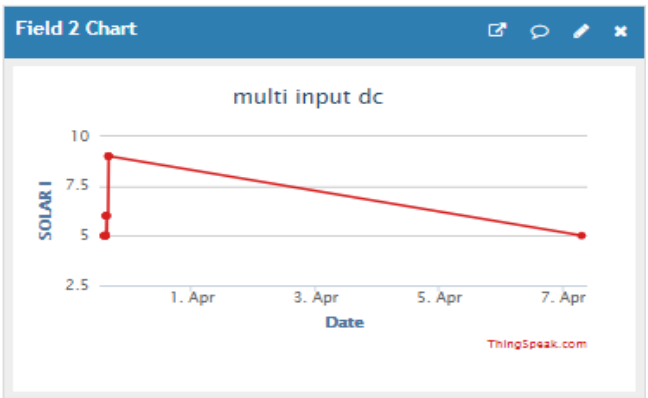

Fig.29. Monitoring of solar input current

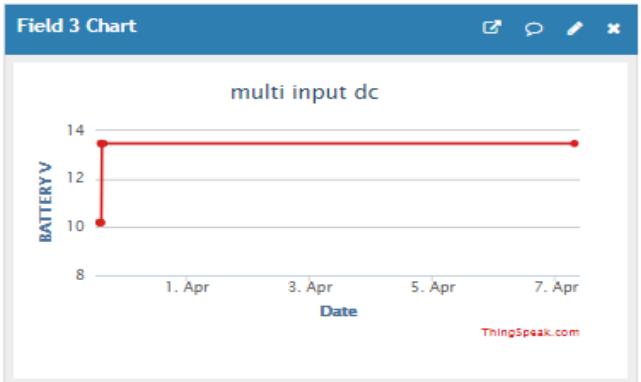

Fig.30. Monitoring of battery input voltage

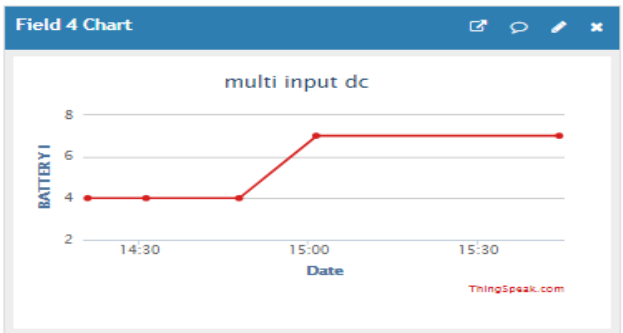

Fig.31. Monitoring of battery current

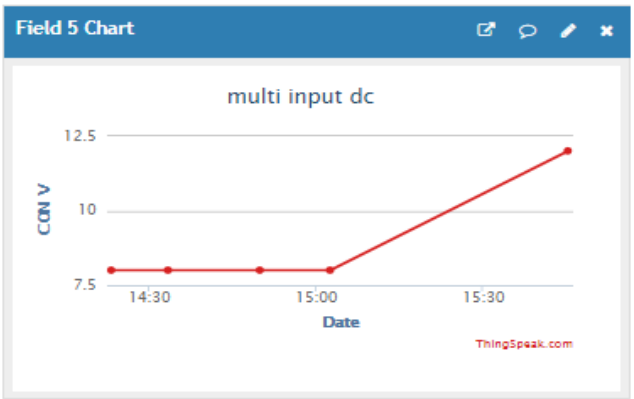

Fig.32. Monitoring of converter voltage

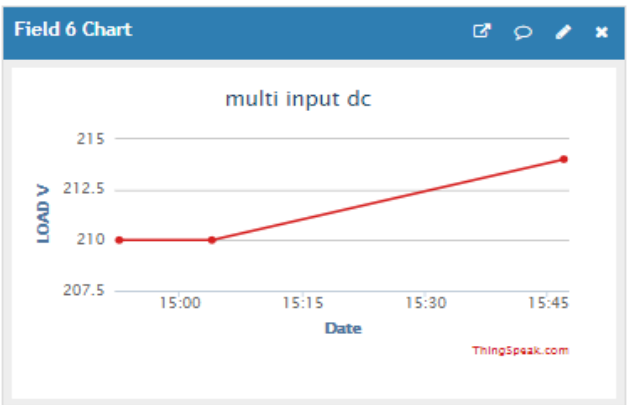

Fig.33. Monitoring of load voltage

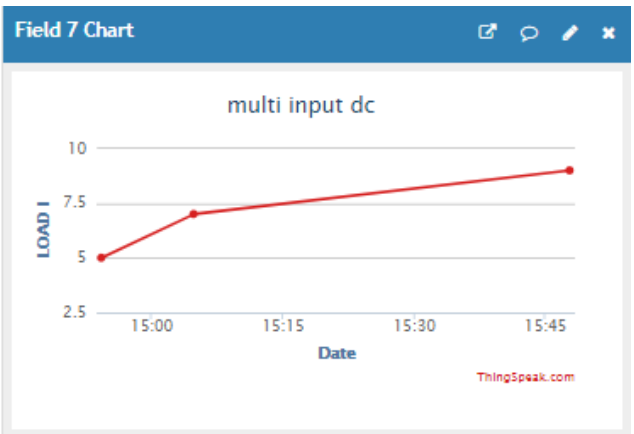

Fig.34. Monitoring of load current

V. CONCLUSION

The performance of a dc to dc converter which operates with dual sources has been tested and the same has been monitored using IOT. The circuit investigation and the monitoring parameters are discussed. With appropriate choice of inductors, self-sufficient sharing of load can be accomplished. The converter has been tested under various operating conditions. A scale down model was developed and the values of simulation results are compared with those of the output values of experimental results. The outcomes demonstrate that the system can be monitored effectively and accurate results can be given with less time delay. The IOT system was compared with the GSM module and IOT module gave superior results. The IOT module is a cheap device that can be used to monitor the performance of any system and can be further developed for a larger system capacity.

REFERENCES:

1. A. Khaligh, A. M. Rahimi, Y-J. Lee, J. Cao, A. Emadi, S. D. Andrews, C. Robinson, and C. Finnerty, "Digital Control of an Isolated Active Hybrid Fuel Cell/Li-Ion Battery Power Supply, IEEE Trans Veh. Technol., vol. 56, no. 6, pp. 3709-3721, Nov. 2007.
2. K. Kobayashi, H. Matsuo, and Y. Sekine, "Novel Solar-Cell Power Supply System Using a Multiple-Input DC–DC Converter," IEEE Trans Ind. Electron., vol. 50, no. 1, pp. 281-286, Feb. 2006.
3. M. Marchesoni, and C. Vacca, "New DC–DC Converter for Energy Storage System Interfacing in Fuel Cell Hybrid Electric Vehicles," IEEE Trans Power Electron., vol. 22, no. 1, pp. 301-286, Jan. 2007.
4. F. Liu, Z. Wang, Y. Mao, and X. Ruan, "Asymmetrical Half-Bridge Double-Input DC/DC Converters Adopting Pulsating Voltage Source Cells for Low Power Applications," IEEE Trans Power Electron., vol. 29, no. 9, pp. 4741-4751, Sept. 2014.
5. M. Marchesoni, and C. Vacca, "New DC–DC Converter for Energy Storage System Interfacing in Fuel Cell Hybrid Electric Vehicles," IEEE Trans Power Electron., vol. 22, no. 1, pp. 301-286, Jan. 2007.
6. A. Khaligh, J. Cao, and Y.-J. Lee, "A Multiple-Input DC–DC Converter Topology," IEEE Trans Power Electron., vol. 24, no. 3, pp. 862-868, Mar. 2009.
7. R.-J. Wai, C.-Y. Lin, J.-J. Liaw, and Y.-R. Chang, "Newly Designed ZVS Multi-Input Converter," IEEE Trans Ind. Electron., vol. 58, no. 2, pp. 555-566, Feb. 2011.
8. A. Kwasinski, "Identification of Feasible Topologies for Multiple-Input DC–DC Converters," IEEE Trans Power Electron., vol. 24, no. 3, pp. 856-861, Mar. 2009.
9. Y. Yuan-mao, and K. W. E. Cheng, "Multi-input voltage-summation converter based on switched-capacitor," IET Power Electron., vol. 6, no. 9, pp. 1909-1916, Nov. 2013.
10. H. Wu, J. Zhang, and Y. Xing, "A Family of Multi-Port Buck-Boost Converters Based on DC-Link-Inductors (DLIs)," IEEE Trans Power Electron., vol. 30, no.2, pp. 735-746, Feb. 2015.
11. Y.-M. Chen, Y.-C. Liu, and F.-Y. Wu, "Multi-Input DC/DC Converter Based on the Multiwinding Transformer for Renewable Energy Applications," IEEE Trans Ind. Appl., vol. 38, no. 4, pp. 1096-1104, Jul/Aug. 2002.
12. Z. Ouyang, Z. Zhang, M. A. E. Andersen, and O. C. Thomsen, "Four Quadrants Integrated Transformers for Dual-Input Isolated DC–DC Converters," IEEE Trans Power Electron., vol. 27, no. 6, pp. 2697-2702, Jun. 2012.
13. Y. Li, X. Ruan, D. Yang, F. Liu, and C. K. Tse, "Synthesis of Multiple-Input DC/DC Converters," IEEE Trans Power Electron., vol. 25, no. 9, pp. 2372-2385, Sept. 2010.

AUTHORS PROFILE

T.RAMPRADESH was born in Puducherry, India in 1986. He obtained his Bachelor degree in Electrical & Electronics Engineering in 2008 from Regency Institute of Technology, Puducherry. He completed his Post graduation in Power Electronics and Drives in 2011 from Arunai Engineering College, Tamilnadu. He is pursuing his doctoral studies at Pondicherry University, Puducherry. Currently, he is working as Associate Professor in the department of Electrical & Electronics Engineering at IFET College of Engineering, Tamilnadu, India. His research interests are in solar hybrid PV systems, power quality, converters. He is a life member of ISTE.

Dr. C. CHRISTOBER ASIR RAJAN was born in 1970. He received the B.E. (hons.), Electrical and Electronics Engineering degree and the M.E. (hons.) degree in power system from the Madurai Kamaraj University, Madurai, India, in 1991 and 1996, respectively. He has received the PhD degree from Anna University; College of Engineering, Guindy Chennai, India. He has received the Postgraduate degree in DI.S. (Hons.) from Annamalai University, Chidambaram, India. He is currently working as a Professor in Pondicherry Engineering College, Puducherry, India. He has published technical papers in international and national journals and conferences. His areas of interest are power system optimization, operational planning, and control. He is a member of ISTE and MIE in India and a student member with the Institution of Electrical Engineers, London, U.K.