International Journal of Engineering and Advanced Technology (IJEAT)
ISSN: 2249-8958 (Online), Volume-8 Issue-5, June 2019

Design and Implementation of Reduced Rated Single-Phase Distribution STATCOM Multilevel Converter

A.Balamurugan, R.Velayutham

Abstract: ***Multilevel inverter plays a vital role to deliver a quality of power to the utility side. It is mainly used to produce a good quality of output power without any harmonics content present in it. They are mainly used in the operation of high energy and high voltage conditions. The inverter is directly connected to the grid as a Static Synchronous Compensator (STATCOM) is used to minimize quality of power and maintain the grid voltage within the desirable limit. In this paper, a single phase cross-switched multi level inverters is used to reduce switching devices circuit without using high voltage switches. The proportional resonance controller (PR) is used to control the inverter circuit. The results are carried out using ATMEGA 328 IC's, and the results are discussed.***

Index Terms: ***Distribution STATCOM, Multilevel inverter, Reactive power Support, static compensator.***

I. INTRODUCTION

A traditional AC system draws the reactive power at the utility side because of non-linear loads. It produces the overvoltage on the system impedance. To avoid disturbance in the system, compensation equipment is connected to a different point in the grid. There are many compensator devices available to meet the reactive power support. Namely, static synchronous compensator (STATCOM) is used to compensate for reactive power. STATCOM are shunt connected to the grid to compensate reactive power. It exchanges only reactive power (i.e., cannot transfer active control) in the grid. STATCOM is used as either a voltage source converter (VSC) or current source converter (CSI).

The distribution STATCOM (DSTATCOM) is the most efficient method to improve power quality in power. It also some advantages, such as to support reactive power and wind energy generation system [1] and Fuel cells [2]. A detailed study and investigation of distribution STATCOM is found in [3]. DSTATCOM has a variety of VSC structure. The multilevel converter is used as the compensator devices as the voltage source converter (VSC) topology the multilevel converters are mostly suitable for power quality improvement and power quality issues. The voltage is balance to m-level diode-clamped multilevel proposed to control current flow model in the system [4]. A flying wheel capacitor is the next stage for improving voltage modulation [5]. This capacitor is used in multilevel inverters as active-neutral point control. Choppers are also used as voltage source inverters in high voltage condition. These choppers are used in high voltage for multi-level conversion [6].

Manuscript published on 30 June 2019.
***** Correspondence Author (s)
A.Balamurugan Assistant Professor, V.M.K.V Engineering College, Salem, Tamil nadu.
R.Velayutham, M.E Power Systems Engineering, V.M.K.V Engineering College, Salem, Tamil nadu.

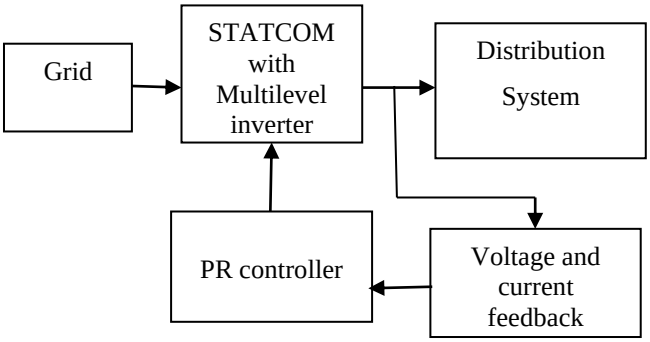

Fig.1: Block Diagram of Proposed method

Fig.1 shows the block diagram of proposed multilevel inverter topology. A grid is directly connected to the STATCOM with a multilevel inverter to the distribution system. To control the V and I in the distribution system (DG), the feedback control loop is used. It collects the V and I value from the distribution system, and they transfer the voltage and current value to the Proposed Resonance (PR) controller. The controller takes the necessary action and gives the control command to the multilevel inverter.

The proposed method is used to reduce both voltage based and current based harmonics by introducing STATCOM with multilevel inverter technology. By proper control of multilevel inverter switches the reactive power support to the grid is attain easily. This system may extend to single phase to three phase systems. The paper deals with a detailed study of multi-level inverter applications and rest of the section are organized as follows. In section II, the general topology of the cross-switched multi-level inverter is presented. In section III, the proposed DSTATCOM structure and system description are as follows. In section IV, the hardware results of the proposed 5-level cross-switched are presented. Finally, the conclusion of this paper is presented.

II. OPERATION AND FUNCTIONS OF STATCOM

STATCOM is a traditional method to handle both generator and load buses in the power system.

Published By:
Blue Eyes Intelligence Engineering
& Sciences Publication (BEIESP)

It eliminates the high frequency effects and switching disturbance power electronic devices. The STATCOM is mainly used to control the voltage profile and transient response in the power system network. The voltage source inverter is a semiconductor device like IGBT, GTO etc. It is used to produce higher pulse signal to the inverter circuit. As the number of voltage level increases in the voltage source inverter, it will produce low harmonic distortion with high quality of waveform. The STATCOM has excellent selectivity of current reference value to compensate the distorted current in the grid and gives the THD value with acceptable limit. The schematic diagram of STATCOM is shown in Fig.2. STATCOM can be used in particular bus to improve the voltage profile and compensate the reactive power. Reactive power compensation is classified into two types:

i. Shunt Compensation
ii. Series compensation

i. Shunt Compensation

In shunt compensation method, the real current is in phase with the load voltage. Hence the control variables are increasing the current value to compensate the harmonic current presents in the inductive load.

ii. Series Compensation

In series compensation, it is used to compensate the harmonic voltage produced by the non-linear load. The compensation devices are connected in series with the grid. The advantage of series compensation is to improve the stability of the power system and delivers the optimum power to the utility side.

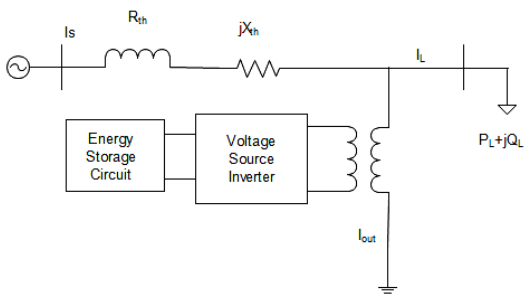

Fig.2: Schematic diagram of STATCOM

III. PROPOSED CROSS-SWITCHED MULTILEVEL INVERTER

The reduced rated cross-switched multi-level inverter is shown in Fig.3. There are various cross connection switches, and dc voltage source is connected in the system. In this circuit, multiple cross connection switches and dc voltage sources are connected. By proper handling of switches in the inverter, the desired voltage level can be easily achieved. A reduced rated single phase cross switched multi-level inverter is shown in Fig.3 (a). This circuit may be extended to n-phase (3-phase) by making the circuit connection cascaded is shown in Fig.3 (b). The operation of single-phase multi-level inverter is similar to three-phase inverter. This paper is focused on single stage cross switched multi-level inverter only. The equations are derived for to get the desired output voltage. Here the power semiconductor switches (Ns) are used to produce NL-level output voltage. The insulated gate bipolar transistor (IGBT) is used as a power electronic switches. The output voltage level (NL) can be expressed as

$$S_{NL} = 2\, S_{Ndc} + 1 \qquad (1)$$

$$S_{NS} = 2\, S_{Ndc} + 1 \qquad (2)$$

where, NL represents No. of voltage level
Ndc is the dc voltage source
Ns is the No. of switches

From the equations (1) and (2) the number of switch level can be expressed as,

$$N_S = N_L + 1 \qquad (3)$$

To get the specific output voltage, the number of switches is reduced by one level. The brief investigation of the output voltage is discussed in the next section.

The general topology shows that cross switched multilevel inverter based on dc voltage source. The transformer is ready to protect the dc voltage source from ac voltage source. The transformer is chosen as a multi-tap secondary side is connected to the rectifier. The rectifier is used to charge the capacitor. In this method, only one ac source is enough to meet the multiple cascaded connected circuits.

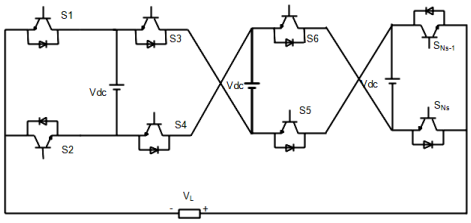

(a)

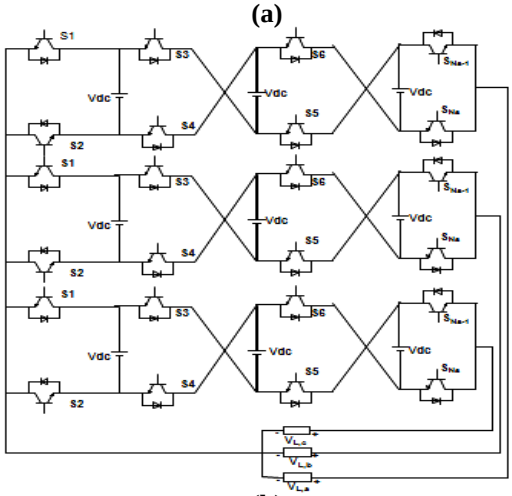

(b)

Fig. 3: Reduced rated cross-switched multilevel inverter (a) Single-phase (b) Three-phase

IV. REDUCED CROSS-SWITCHED MULTI-LEVEL INVERTER BASED DSTATCOM

In the proposed reduced cross-switched inverter based distribution STATCOM is shown in Fig.4. The proposed circuit, the capacitors are used instead of a dc voltage source. The capacitors are directly charged from the grid. Here the impedance (R and L) are used for the filtering process.

Fig.4. shows the reduced rated single-phase Distribution STATCOM multilevel converter. In the 5-level inverters two capacitors are used to control the voltage with the desired range takes the values of each capacitor as same By proper control of voltage magnitude and angle of the inverter, the maximum power transfers to the grid.

Published By:
Blue Eyes Intelligence Engineering
& Sciences Publication (BEIESP)

The real power transfers from the grid and inverter will be zero. The proposed systems have the following advantages:

1. To minimize No. of switches,
2. To minimize power loss,
3. To delivered a quality of power to the customer side,
4. Reactive power support,
5. Grid-synchronization,
6. The current path is cut,
7. Protection against peak overshoots problems.

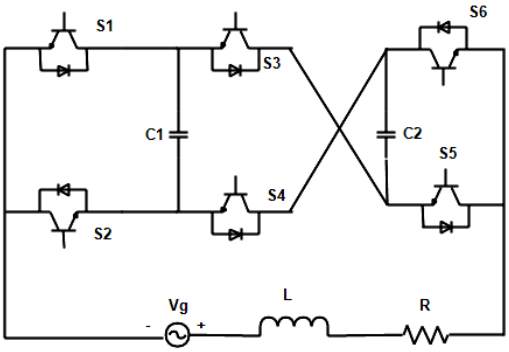

Fig.4: Reduced rated single-phase Distribution STATCOM multilevel

V. HARDWARE RESULTS

Reduced rated hardware is developed to prove the proposed circuit diagram. Multilevel is used to generate injected power. The generated power is stored into capacitor. Hence capacitor is used to store energy from MOSFET. It is required to injected power for the 5-level cross-switched multilevel inverter. IRF5V0 MOSFET's are used to construct cross-switched multilevel inverter. ATMEGA 328 controller is used to generate the firing pulse. TLP250 MOSFET driver is used to drive the MOSFET. Fig.5 shows the hardware Result (a) Voltage across capacitor (b) Firing Pulse from microcontroller (c) Voltage across gate and source MOSFET (d) Output voltage of cross switched multilevel inverter (e) Voltage across load

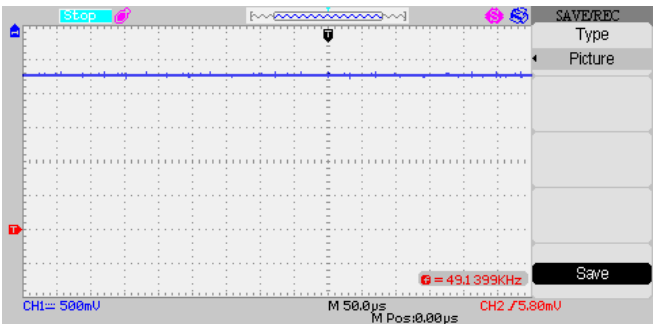

(a)

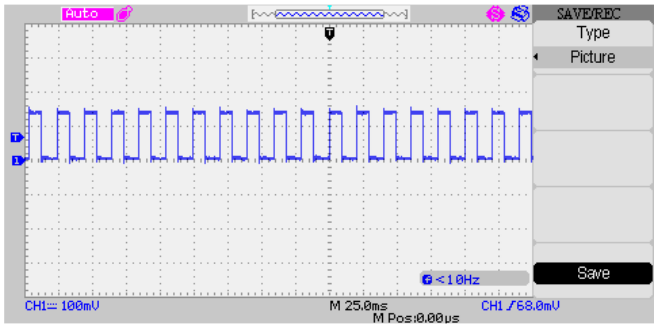

(b)

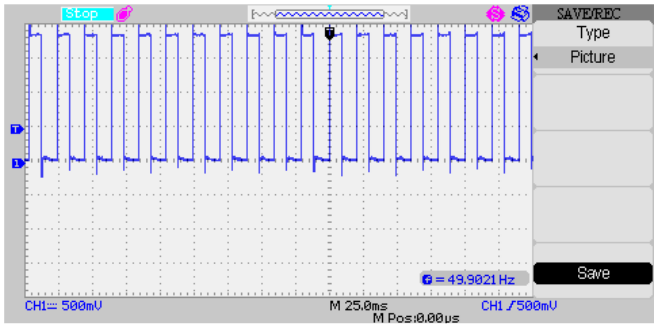

(c)

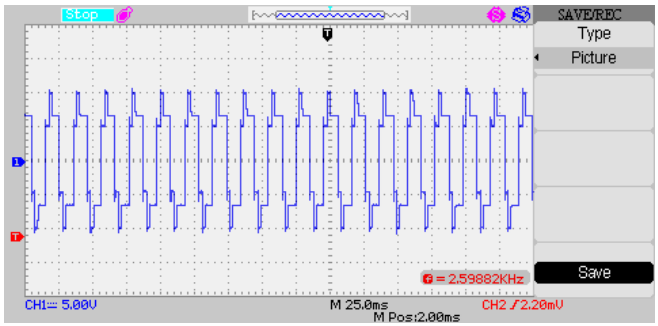

(d)

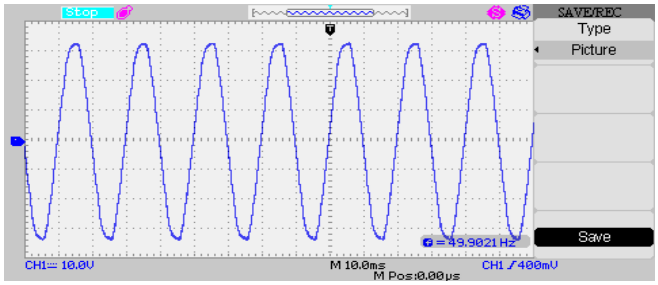

(e)

Fig.5: Hardware Result (a) Voltage across capacitor (b) Firing Pulse from microcontroller (c) Voltage across gate and source MOSFET (d) Output voltage of cross switched multilevel inverter (e) Voltage across load

VI. CONCLUSION

In this paper, reduced rated single-phase Distribution STATCOM multilevel converter was used in distribution STACOM.

Published By:
Blue Eyes Intelligence Engineering
& Sciences Publication (BEIESP)

The reduced stage DSTATCOM topology is used in a 5-level inverter, the proposed structure can be increased to N-level. The proposed multilevel inverters gives the desired output voltage and undistorted output waveform. Proper control of each switch can be attained in this method. The results are carried by ATMEGA 328 IC's. In the proposed method, the reactive power is easy transfers to the grid. The capacitor voltage is easily adjusted depends upon the system working condition.

REFERENCES

1. E. Lavopa, et al. "Real-time estimation of fundamental frequency and harmonics for active shunt power filters in aircraft electrical systems." IEEE Transactions on Industrial Electronics, vol. 56, no. 8, pp. 2875-2884, 2009.
2. M. Molinas, J.and T. Undeland. "Extending the life of gearbox in wind generators by smoothing transient torque with STATCOM." IEEE Transactions on Industrial Electronics, vol. 57, no. 2, pp. 476-484, 2010.
3. B. Singh, et al. "Comprehensive study of DSTATCOM configurations." IEEE Trans. on Industrial Informatics, vol. 10, no. 2, pp. 854-870, 2014.
4. Khajehoddin, S.A., Bakhshai, A. "A simple voltage balancing scheme for m-level diode-clamped multilevel converters based on a generalized current flow model." IEEE Trans. Power Electron 23, (5), pp. 2248–2259, 2008.
5. Pulikanti, S.R., Konstantinou, G.S., Agelidis, V.G. "Generalisation of flying capacitor-based active-neutral point-clamped multilevel converter using voltage-level modulation." IET Power Elec., 5, (4), pp. 456–466, 2012.
6. Meynard, T.A., Foch, H. "Multi-level conversion: High voltage choppers and voltage-source inverters."Proc. PESC, 1992, pp. 397–403.

AUTHORS PROFILE

A. Balamurugan is completed Master of engineering in applied electronics, Anna University, Chennai. B.E in Electrical and Electronics Engineering, Madras University, Chennai. Diploma in electronics and communication engineering in Director of technical education, Chennai and currently working as Assistant Professor in V.M.K.V engineering college, Salem.

R.Velayutham is pursuing Master of engineering in power systems engineering from the department of electrical and electronics engineering, Vinayaka mission's university, Salem., B.E degree in Electrical and Electronics Engineering, Bharathiar University, Coimbatore, Diploma in electrical engineering in the director of technical education, Chennai

Published By:
Blue Eyes Intelligence Engineering
& Sciences Publication (BEIESP)