International Journal of Engineering and Advanced Technology (IJEAT)
ISSN: 2249-8958 (Online), Volume-8 Issue-5, June 2019

Fabrication of Manual Indexing valve for Controlling Four Actuators

G Manjunath Swamy, G R Bharath Sai Kumar, K Veeresh

Abstract: ***For controlling mechanical systems through hydraulic equipments, actuators require spool valves i.e. one spool valve is required per actuator with the increase in number of spool valve hence increases cost of the system. In this paper author have designed a hydraulic valve which replaces spool valve and control more than one actuators. Advantages of proposed novel method include: One Indexing valve can control more than one actuator hence reduce the number of valves and cost; improves the speed of the system by changing the indexing speed; reduce manpower.***

Key Words: ***Hydraulic motor, hydraulic pump, actuators, spool valve, efficiency etc.***

I. INTRODUCTION

An indexing valve is a flow control valve used in Hydraulic system. This valve can control more than one actuator, and this unit consists of outer hallow cylinder and inner cylinder. The inner cylinder fits in the hallow portion of outer cylinder. This inner cylinder is also connected to a stepper motor. The rotation of motor rotates the inner cylinder inside the outer cylinder which changes the flow of liquid through the valve this controls the movement of the actuator [1-12]. Our Indexing valve can replace the conventional Spool valves that are used for controlling the actuator. In present scenario one spool valve can control only one actuator thus spool valves used in a hydraulic system is equal to the number of actuators. Whereas spool valve can control more than one actuator, this in turn makes the number of system components less and also reduces the overall cost of hydraulic system. Even the controlling of the movement of actuator can be easy. There are two main types of hydraulic actuators (i) single acting cylinder actuator (ii) double acting cylinder actuator as shown in fig 1(a) and fig1(b) respectively. In this work we have used single acting cylinder actuator.

i) Single acting cylinder actuator

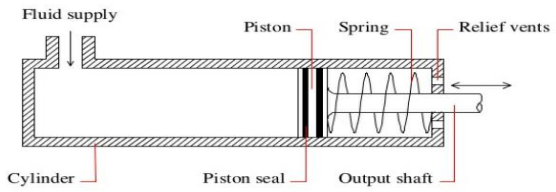

Fig 1(a) Single cylinder actuator

Manuscript published on 30 June 2019.
***** Correspondence Author (s)
G Manjunath Swamy, Assistant Professor, Dept. of Mechanical Engg. Rao Bahadur Y. Mahabaleswarappa Engg. College, Ballari, India.
G R Bharath Sai Kumar, Professor, Dept. of Mechanical Engg. Siddaganga Institute of Technology, Tumakuru, India.
K Veeresh, Principal & Professor, Dept. of Mechanical Engg. Rao Bahadur Y.Mahabaleswarappa Engg. College, Ballari, India.

ii) Double acting cylinder actuator

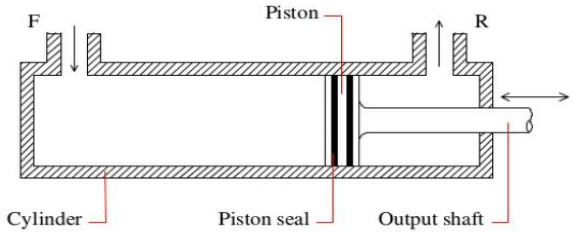

Fig 1(b) Double acting cylinder

II. RELATED WORK ON SINGLE ACTUATOR

Using single spool valve i.e., one spool valve can control only one actuator so, number of spool valves are requires number of actuators, and thus it increases cost of the system; reduces the speed and required more time and space. All these proposed method result in high cost and low speed [4, 10]. In this paper, authors have proposed a novel method using single valve to control multiple actuators. The figure 2(a) shows how the single spool valve control the single actuator. The valve body contains spool valves which can be positioned manually or by hydraulic pressure or by springs.

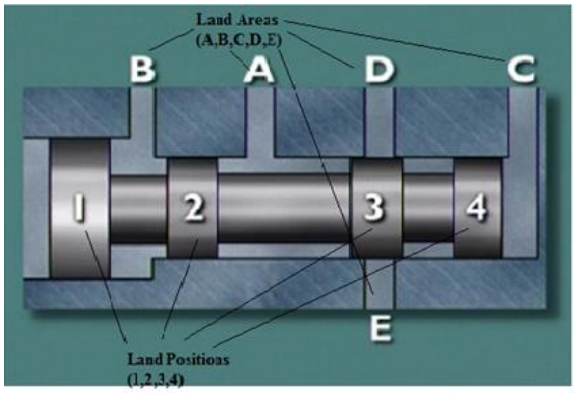

Fig. 2(a) Spool Type Directional Control Valve [10]

Spool valves can be positioned manually, or by springs, or by pressure, and in many applications have differential lands of different diameters. In this example, the different diameters result in a larger face area on land 1 than on land 2. This is known as a differential area and when fluid under pressure enters at port B, this differential area creates a differential force. This moves the valve to the left since the force acting on land 1 is greater than the force on land 2. Alternatively, the valve could be moved by admitting fluid at port C. In both cases the valve movement allows previously blocked fluid at D to flow between lands 3 and 4 to exhaust at E or to pass to some other part of the system.

Published By:
Blue Eyes Intelligence Engineering
& Sciences Publication (BEIESP)

If fluid pressure is removed from C the valve will remain stationary. Even if fluid is admitted at port A, no movement can occur as the areas on lands 2 and 3 are equal and both generate an equal force. It can turn the flow of hydraulic fluid from a hydraulic pump to an actuator ON or OFF the route the fluid takes [1-10].

III. PROPOSED WORK

a. Design procedure for indexing control valve

Engineering design is the creation of plans for machines, structures or systems to perform a desired function.

The design processes involved in our research are as follows:

a) Recognition of need: Nowadays most of the hydraulic systems that are used consist of spool valves that control the direction of flow of liquid to the actuators. But one spool valve can control only one actuator.

b) Definition of problem: As the number of actuator increases in the system the number of spool valve increase which in turn increases the system cost and also increases the number of components in a system.

c) Synthesis: We used inner cylinder and outer hallow cylinder, where inner cylinder is connected to stepper motor and fits inside the outer cylinder. Outer cylinder provided with through holes these holes are connected to actuator ports, pressure port and reservoir port. Inner cylinder is provided with through holes and slots.

d) Analysis: At first position the inner cylinder and outer cylinder through holes get in contact, then the liquid from pressure port enters the left side of actuator it causes forward stroke and the liquid in right side of actuator flows to the reservoir. Now the stepper motor is rotated which in turn rotate the inner cylinder, now the slots on inner cylinder connect through the holes of outer cylinder, now the flow from the pressure port enters into the right side portion of the actuator and the liquid in the left side port flows back to reservoir through the slot on inner cylinder. Now again the stepper motor is rotated to next degree then the flow takes in portion of 2nd actuator at this time the movement in the 1st actuator is kept constant.

e) Optimization: At first the slots and through holes are given on length basis as the length of the valve increases controlling the number of actuator increases but there was loss in the material it is even difficult to support the valve as its length increases, now the slots are given on the diameter basis which can reduce the material compared to length basis.

f) Evaluation: It has to be done for various pressure of liquid, for various diameters, and even for various working condition. This evaluation step is the final proof that the product is successfully designed.

Our flow control valve consists of outer hollow cylinder and an inner cylinder. The hollow cylinder consist a pressure port, tank port, port on right side of cylinder and one port to left side of cylinder. The inner cylinder fits into the hollow part of the outer cylinder. It is provided with holes and slots on it. When the inner cylinder is at a first relative position with the outer cylinder, the pressure port is connected to the left port and tank outlet is connected to the right port. When the inner cylinder is at a second relative position with the outer cylinder, the pressure port is connected to the right port and tank outlet is connected to left port of cylinder. For forward stroke of piston, the port of outer cylinder comes in contact through holes of inner cylinder. For return stroke of piston the port of outer cylinder come in contact with the slots grooved on the inner cylinder.

b. Design formulae for Hydraulic pump and motor:

Hydraulic power: It is also known as 'Absorbed power', representing the energy imparted on fluid being pumped to increase its velocity and pressure.

$$Ph = \frac{Qdp}{3600}\ KW$$

where,

P_h=Hydraulic power in KW

Q=Discharge in cubic meter per hour

d_p =Differential pressure across pump in KPa

Shaft power: It is the power supplied by the motor to pump shaft. It is sum of hydraulic power and power loss due to inefficiencies in power transmission from shaft to fluid.

$$Ps = \frac{Ph}{\eta p}\ KW$$

where,

Ps=Shaft power in KW

P_h= Hydraulic power in KW

ηp=Pump efficiency

Motor Power: It is power consumed by pump motor to turn the pump shaft. It is the sum of shaft power and loss due to inefficiencies in converting electrical energy into kinetic energy.

$$Pm = \frac{Ps}{\eta m}\ KW$$

where,

Ps= Shaft power in KW.

Pm=Motor power in KW.

η_m=Motor efficiency.

The other factors which increases the required power,

- Gear box=98%
- Belt drives=96%

Stepper motor

Standard step angle= 18^0

Angular velocity (ω),

$$\omega = \frac{2\prod N\ T}{60}\ \text{radian per second}$$

where,

N= Speed of motor in Rpm

Time taken to reach required angle,

$$t = \frac{\theta}{\omega}\ \text{seconds}$$

where,

Θ= required angle in radians.

ω =angular velocity in radian/ second

Research work has been carried out further that are related to Indexing control valve used to control multiple actuators. In this regard we are focussing on Indexing control valve drawing and sketches using CATIA Modelling software.

c. Indexing control valve CATIA models:

The inner cylinder, outer cylinder, oil seal, assembly of indexing control valve and changes in profile with number of slots are described as follows;

Published By:
Blue Eyes Intelligence Engineering
& Sciences Publication (BEIESP)

(a) Proposed Inner Cylinder is depicted in figure 3(a) used CATIA modelling software multiple slots with indexing angle 18^0.

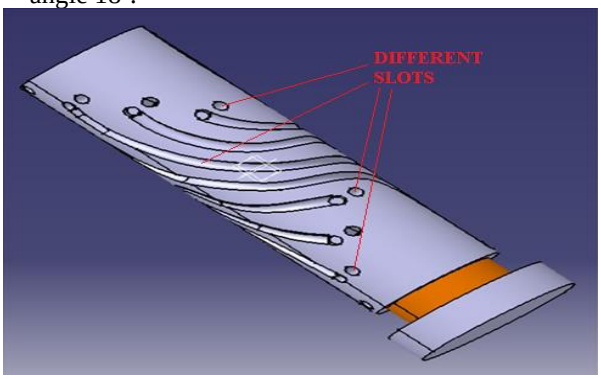

Fig. 3(a) CATIA model of inner cylinder (It consist of slots with indexing angle of 18^0).

Different views of inner cylinder namely: front view, top view, left view and isometric view is depicted in fig. 3(b).

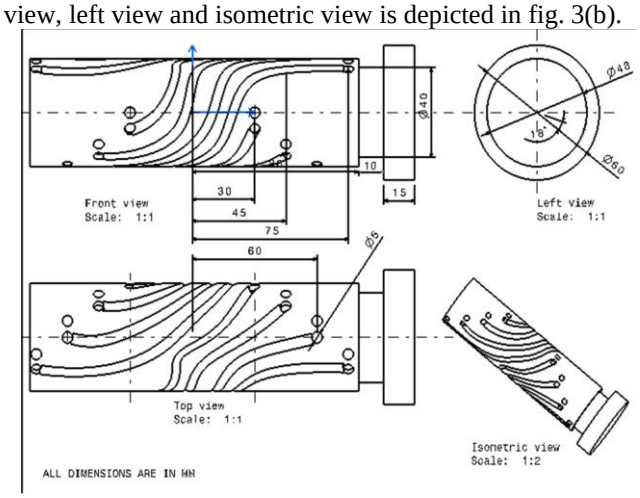

Fig. 3(b) Different views of inner cylinder.

(b) Proposed Outer Cylinder is depicted in figure 3(c) used CATIA modelling software multiple holes with indexing angle 36^0.

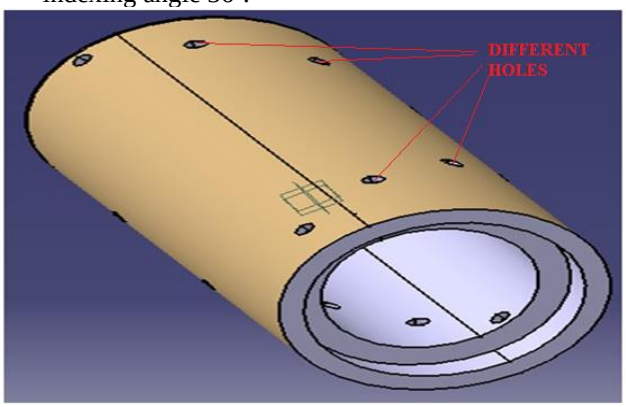

Fig. 3(c) CATIA model of Outer cylinder (It consists of holes with indexing angle of 36^0)

Different views of outer cylinder namely: front view, top view, left view and isometric view is depicted in fig. 3(d).

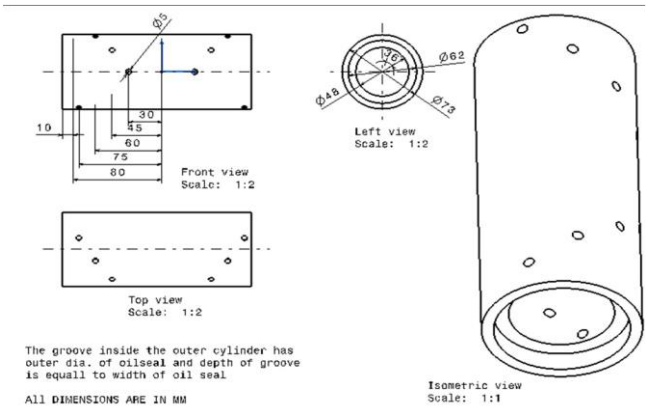

Fig. 3(d) Different views of outer cylinder

(c) Proposed Oil Seal is depicted in figure 3(e) used CATIA modelling software

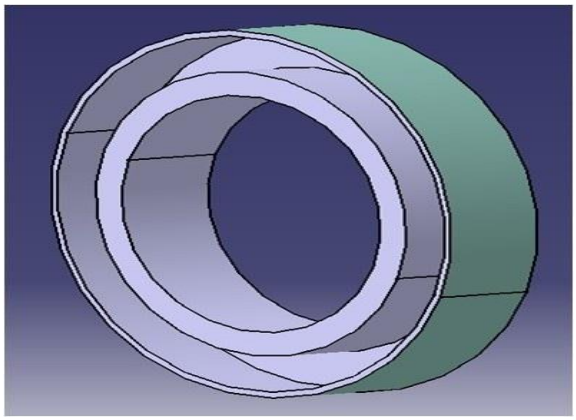

Fig. 3(e) CATIA Model of Oil Seal (It is fitted inside the outer cylinder pocket and mounted on inner cylinder.)

Different views of oil seal namely: front view, top view, left view and isometric view is depicted in fig. 3(f).

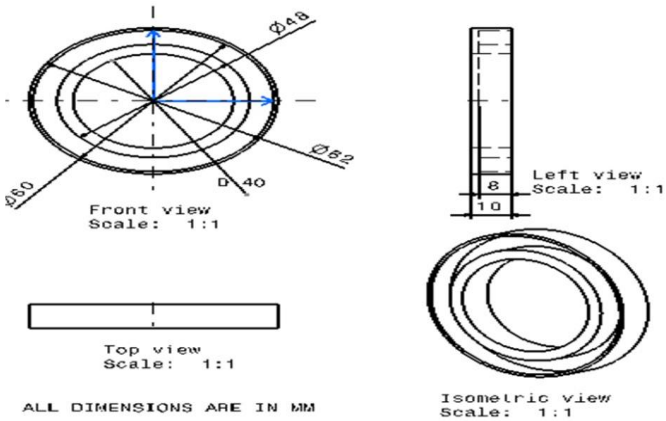

Fig. 3(f) Different views of Oil Seal.

d. Assembly of indexing control valve

Published By:
Blue Eyes Intelligence Engineering
& Sciences Publication (BEIESP)

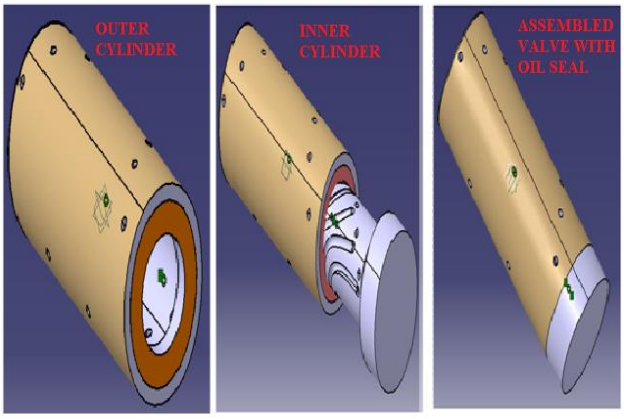

Fig 3(g) Assembly of Indexing Valve

e. Changes in Profile with Number of Slots is shown in fig. 3(b) with (i) 4 actuators (ii) 3 actuators & (iii) 2 actuators

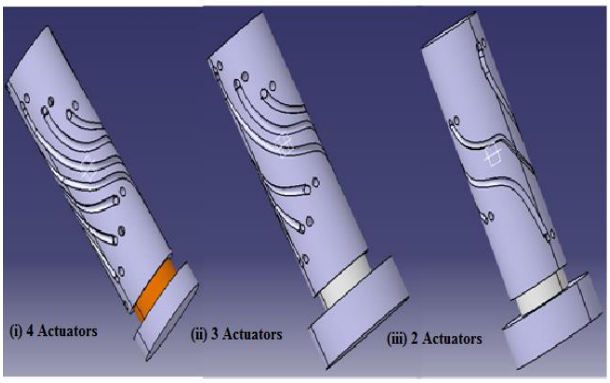

Fig. 3(h) Change in Profile with Number of Slots

IV. WORKING OF PROPOSED WORK: WORKING OF proposed work with 4 actuators is shown in fig. 4(a).

Connection of Control Valve to Actuators

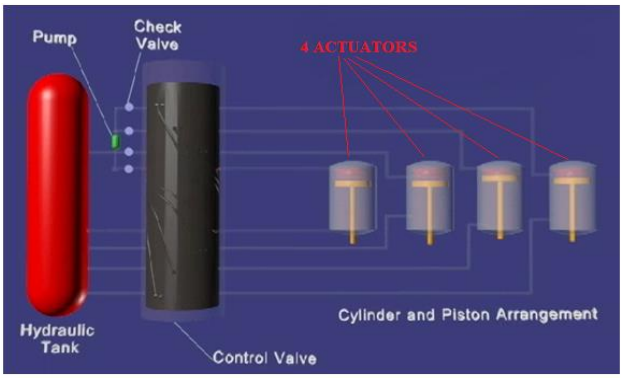

Fig 4(a) Connection of control valve to actuators

The Indexing valve can control multiple actuators at a time; the control valve is of Rotary type because the valve is rotated in circular motion and simple in design. As the number of actuators increases the number of slot increases thus the diameter and length of the valve cylinder increases and reduces the space between the slots. For all actuators 0^0 to 18^0 is forward stroke and 18^0 to 0^0 is backward stroke. The working of 4 actuators as shown in fig. 4(a) is explained in case 1.

Result Case Discussion:

First the inner cylinder fits inside the hallow portion of the outer cylinder, the inner cylinder is also connected to stepper motor which gives rotation to the inner cylinder. Initially the inner cylinder is at 0^0 now the inner cylinder is at a first relative position of the outer cylinder, The pressure port is connected to the left port and tank outlet is connected to the right port, then the fluid from the pump passes through a pressure port and enters the left side of cylinder and forces the piston to move forward. The pressure at left side more compared to right thus the fluid present in the right is sent to the tank through a tank port of the valve, this causes the forward stroke of the actuator.

Now when the inner cylinder of valve is indexed to an angle of 18^0 through a stepper motor then the inner cylinder is at a second relative position with the outer cylinder of valve. The pressure port is connected to the right port and the tank port is connected to left port of the actuator, the high pressure fluid from pump through valve enters the right side of the actuator, since the pressure of fluid at left side of piston is less, the high pressure of fluid forces the piston to move towards left causing return stroke. The fluid in left side flows back to the tank thus completes the cycle. Now the indexing unit is rotated to 0^0 now the inner cylinder is at a first relative position with outer cylinder of the 2nd actuator and now it causes the forward stoke of 2nd actuator and the 1st actuator is at rest. After cranking to 18^0 the inner cylinder is at second relative position with outer cylinder of the 2nd actuator and this causes return stroke of the 2nd actuator. Now by cranking to 0^0 the inner cylinder is at first relative position with outer cylinder of the 3rd actuator and this causes forward stroke of the 3rd actuator, now all the other actuators are at rest. After cranking to 18^0 the inner cylinder is at second relative position with outer cylinder of the 3rd actuator and this causes return stroke of the 3rd actuator. At 0^0 forward stroke of 4th cylinder and at 18^0 return stroke of 4th cylinder takes place all the other actuators are at rest.

V. CONCLUSION

The literature survey reveals that most of the earlier work on hydraulic actuators and DC valve was carried out using single valve controlling single actuator. This paper provides an elaborate explanation of working of our proposed work with a novel idea of controlling multiple actuators using single indexing spool valve. The proposed work reduces system cost, required space, maintenance cost, manpower and increased speed.

VI. SCOPE OF FUTURE WORK

Work has been explained using 4 actuators, in future we will work with multiple actuators through computer interface. In addition we will explore the current work by varying pressure and cylinder diameter.

REFERENCES

1. F. Bu and B. Yao, .Nonlinear adaptive robust control of hydraulic actuators regulated by proportional directional control valves with dead band and nonlinear flow gain coefficients. In Proc. of American Control Conference, Chicago, PP. 4129-4133, 2000.

Published By:
Blue Eyes Intelligence Engineering
& Sciences Publication (BEIESP)

2. H. E. Merritt, Hydraulic Control Systems. John Wiley & Sons, 1967.
3. Stewart, H., Pneumatics and Hydraulics, revised by Tom Phibin, Macmillan Publishing Company, New York, 4th Edition, 1987.
4. Parr, E.A. Hydraulics and Pneumatics: A Technicians and Engineers Guide - 2nd ed.,
5. Majumdar S.R. Oil Hydraulic Systems : Principles and Maintenance, McGraw-Hill, 2001.
6. Ian C. Turner, Engineering Applications of Pneumatics and Hydraulics, Butterworth-Heinemann, 1995.
7. CDX online e-textbook: Transmissions: Automatic transmissions: Hydraulic systems and controls
8. www.bluediamondattachments.com, www.equipmentforums.com, Hydraulics and cylinder drift problems.
9. www.Applied.com, General Troubleshooting Charts of Hydraulic systems.
10. Yang Xuelan, Gong Guofang, Liu Yi, Min Chaoqing, "Research on Dynamic Characteristics of the Rotary Valve," icdma, PP.675 678, 2012. Third International Conference on Digital Manufacturing & Automation, 2012
11. H. E. Meritt, Hydraulic Control Systems, John Wiley & Sons Inc., 1967.
12. Ellman A.: Leakage behaviour of four-way servovalve, Proceedings of the ASME Fluid
13. Power Systems and Technology, PP. 163–167, Vol. 5, 1998.

AUTHORS PROFILE

Name: G Manjunath Swamy, Designation:, Assistant Professor Qualification: B.E.,M.Tech, (Ph Experience: 6.5
E-mail: manju.be.143@gmail.com

Dr.G R Bharath Sai Kumar, Designation: Professor
Qualification: M.E., Ph.D, Research Interest: esign
Phone: +91 9844097576 Email: grb_sit@hotmail.com
Personal Webpage: Browse link
Joined the institute: Year: 1988

Name: Dr. Kuppagal Veeresh, Designation: Professor & Principal, Qualification: M.E., Ph.D., MISTE, FIV, Experience: 25
E-mail: kuppagalveeresh@yahoo.co.in

Published By:
Blue Eyes Intelligence Engineering
& Sciences Publication (BEIESP)