International Journal of Engineering and Advanced Technology (IJEAT)
ISSN: 2249-8958 (Online), Volume-8 Issue-4, April 2019

Active ROCOF Relay for Islanding Detection & compensation of Power Quality Issues by D-STATCOM

P Vikas, S Parthasarathy, K V Siva Reddy

***Abstract:** In this venture we are talking about the impacts of utilizing DSTATCOM in the power framework amid blame conditions. DSTATCOM implies Distribution Static Compensator. It involves a two-level voltage source converter (VSC) a DC essentialness storing device, a coupling transformer related in shunt to the dispersal organize through a coupling transformer. In this paper we are directing the insufficiencies like voltage hang in the midst of single line to ground fault and voltage swell. STATCOM is a static VAR generator, whose yield is moved so as to keep up or control unequivocal parameters of the electric power structure. A Power quality issue is an occasion appeared as a nonstandard voltage, current or repeat that results in a failure or a mis-movement of end customer sorts of apparatus. Utility scattering frameworks, tricky present day weights and essential business exercises experience the evil impacts of different kinds of blackouts and administration interferences which can cost noteworthy money related misfortunes. With the rebuilding of intensity frameworks and with moving pattern towards appropriated and scattered age, the issue of intensity quality is going to take more current measurements.*

***Index Terms**: Power Quality Improvement, D-STATCOM, ROCOF*

I. INTRODUCTION

With the approach of intensity semiconductor exchanging gadgets, as thyristors, GTO's (Gate Turn off thyristors), IGBT's (Insulated Gate Bipolar Transistors) and a lot more gadgets, control of electric power has turned into a reality. Such power electronic controllers are broadly used to bolster electric capacity to electrical burdens, for example, movable speed drives (ASD's), heaters, PC control supplies, HVDC frameworks and so on .

The power electronic gadgets due to their inalienable non-linearity draw consonant and receptive power from the supply. In three phase structures, they could in like manner cause unbalance and draw extraordinary unprejudiced streams. The mixed music, responsive power weight , unbalance, and super fair-minded streams cause low structure profitability and poor power factor.

Manuscript published on 30 April 2019.
***** Correspondence Author (s)
P Vikas Department of EEE, Koneru Lakshmaiah Education Foundation, Vaddeswaram, A.P, India.
S Parthasarathy, Department of EEE, Koneru Lakshmaiah Education Foundation, Vaddeswaram, A.P, India.
K V Siva Reddy, Department of EEE, Koneru Lakshmaiah Education Foundation, Vaddeswaram, A.P, India

© The Authors. Published by Blue Eyes Intelligence Engineering and Sciences Publication (BEIESP). This is an open access article under the CC-BY-NC-ND license http://creativecommons.org/licenses/by-nc-nd/4.0/

Power Quality (PQ) for the most part oversees issues like keeping up a fixed voltage at the Point of Common Coupling (PCC) for various spread voltage levels paying little heed to voltage changes, keeping very close solidarity control factor control drawn from the supply, impeding of voltage and current unbalance from passing upwards from various appointment levels, diminishing of voltage and current sounds in the structure and camouflage of extraordinary supply fair-minded current . Generally, idle LC channels and fixed reimbursing devices with some dimension of assortment like thyristor traded capacitors, thyristor traded reactors were used to improve the power factor of cooling loads. Such contraptions have the negative signs of fixed pay, broad size, developing and resonation. Nowadays kinds of apparatus using power semiconductor devices , generally known as unique power channels (APF's), Active Power Line Conditioners (APLC's, etc are used for the power quality issues in view of their dynamic and adaptable game plans. Versatile AC Transmission Systems (FACTS) and Custom Power things like STATCOM (Static synchronous compensator), DVR (Dynamic Voltage Restorer, etc course of action with the issues related to control quality using similar control strategies and thoughts.

II. MODELLING OF THE WIND TURBINE

a) Modelling of the wind turbine:

Mechanical torque created by the breeze turbine Tm is communicated as

$Tm=1/2\rho\pi Rt2Cp(\lambda\beta)V3/\Omega r$

$(\lambda)=Rt\Omega r/v$

$Cp(\lambda,\beta)$ has been considered as

$Cp=[0.5-0.00167(\beta-2)]$

$\sin[\pi(\lambda+0.1)/(12-0.3)(\beta-2)]$

β=pitch point which is set as zero

b) Modeling of the wind generator:

When structuring a breeze generator, it is helpful to make a PC reproduction before structure a model. On the off chance that there are N stages, at that point there are N stator voltages, flows, and motion linkages. Give the arrangement of stator voltages a chance to be spoken to minimally as

$V=[\ v1\ v2\ \ldots\ vN\ ]T$

At that point, applying Faraday's and Ohm's laws, the stator voltage condition might be composed as

$V= ri + d/dt(\lambda)$

Published By:
Blue Eyes Intelligence Engineering
& Sciences Publication (BEIESP)
© Copyright: All rights reserved.

As to machine as adjusted, symmetrical, and attractively straight, the transition linkage condition might be composed as
$\Lambda = Li + \lambda pm$

where
L is a symmetric N*N framework of the proper self-and shared inductances.

Λpm is a N*1 vector of stator transition linkages because of the changeless magnet. The torque condition can be gotten from co vitality connections.

$Te= P/2\ \partial/\partial\theta r\ (1/2\ iT\ Li + iT\ \lambda pm) + Tcog$

Where

Θr is the electrical rotor position in radians.

P is the quantity of posts.

Θrm = 2θr/p is the mechanical rotor position. Tcog is the cogging torque.

Conditions speak to a reproduction model of the machine gave that the opposition r, the inductance network L, the cogging torque Tcog , and the perpetual magnet motion linkage vector, λpm ,are known. The parameters can be resolved from direct estimation or by count from engine geometry (i.e., limited component examination). The mechanical elements of the framework, which are not talked about here since they can generally shift, must be recreated to decide position and speed. Λpm is the capacity of rotor position.

The torque condition for the surface-mounted case is

$Te(sm) = P/2\ iT\ \partial/\partial\theta r\ \lambda pm + Tcog$

The torque condition for a machine with covered magnets is

$Te(BM)=P/2\ iT(1/2(\partial/\partial\theta r\ L)I+ \partial/\partial\theta r\ \lambda pm)+Tcog$

The cogging torque might be spoken to as

$Tcog = \Sigma Tq$

z Cos (z Nt θr) + Tz

d Sin (z Nt θr)

Z is the arrangement of normal numbers.

The Fourier arrangement constants Tq

z and Td

z are unimportant and the consistent.

Nt is the quantity of stator teeth.

The power in to the machine and the yield is communicated as

Stick = VTi

Frown = Te ωrm Where ωrm is the mechanical rotor speed.

In the event that the back emf is sinusoidal, at that point the transition linkage due the perpetual magnets is too. That is λpm might be communicated as

$\Lambda pm = \lambda m\ [\sin(\theta r)\ \sin(\theta r - 2\pi/3)\ \sin(\theta r + 2\pi/3)\ ]\ T$

The back emf because of the lasting magnets might be expressed as

$Epm = \omega r\lambda m\ [\cos(\theta r)\ \cos\ (\theta r - 2\pi/3)\ \cos(\theta r + 2\pi/3)\ ]\ T$

Where ωr is the electrical rotor speed and equivalents P/multiple times.

The rotor position– subordinate terms can be wiped out by changing the factors into a reference outline fixed in the rotor. Just the consequences of this long procedure are given here. The change is connected as.

Vqdo = Kv

Vqdo = [Vq Vd Vo] T

$$K = \frac{2}{3}\begin{pmatrix} \cos(\theta_r) & \cos(\theta_r - 2\pi/3) & \cos(\theta_r + 2\pi/3) \\ \sin(\theta_r) & \sin(\theta_r - 2\pi/3) & \sin(\theta_r + 2\pi/3) \\ ½ & ½ & ½ \end{pmatrix}$$

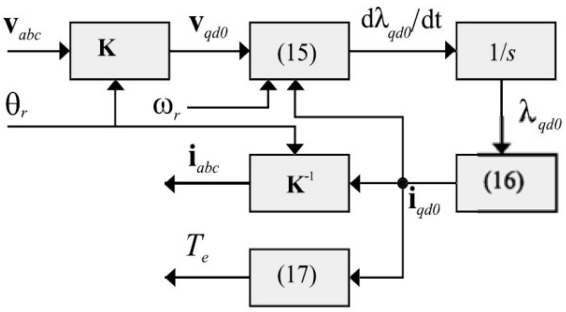

Figure 1. Diagram of control loop model

After modifying the equations into the rotor reference frame with the subsequent relationships hold.

Vq = riq + ωrλd + d/dt (λq)

Vd = rid - ωrλq + d/dt (λd)

Vq = riq + d/dt (λ0)

Λq = Lqiq

Λd = Ldid + λm

Λo = Loio

Te = 3/2 P/2 λm IQ + (Ld - Lq) idiq

Published By:
Blue Eyes Intelligence Engineering
& Sciences Publication (BEIESP)
© Copyright: All rights reserved.

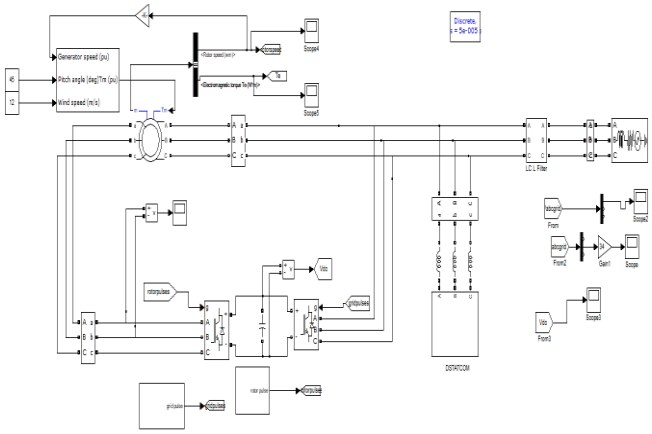

Fig: 2Three phase wind & DSTATCOM based ROCOF relay grid

III. PRINCIPLE AND OPERATION OF DSTATCOM

A D-STATCOM (Distribution Static Compensator), which is structurally configured in Figure 2, includes a two-level Voltage Source Converter (VSC), a dc imperativeness storing contraption, a coupling electrical device coupled in shunt to the apportionment orchestrate through a coupling transformer. The VSC changes over the dc voltage over the limit contraption into a great deal of three-organize cooling yield voltages. These voltages are in stage and joined with the climate control system structure through the reactance of the coupling transformer. Sensible adjustment of the stage and degree of the D-STATCOM yield voltages licenses convincing control of dynamic and open power exchanges between the D-STATCOM and the forced air system structure.

The VSC related in shunt with the forced air system structure gives a multifunctional topology which can be used for up to three extremely specific purposes:

1. Voltage rule and pay of responsive power;
2. Alteration of power factor; and
3. End of current sounds.

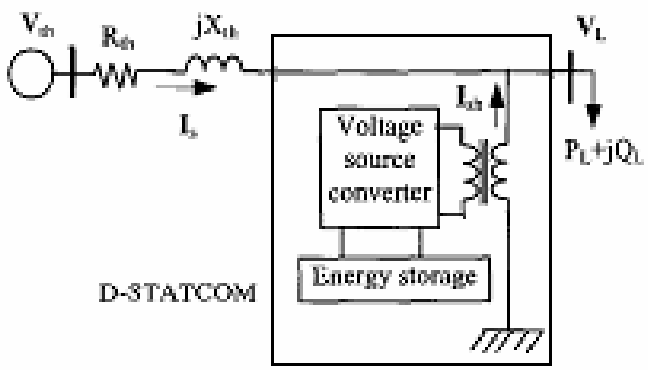

Fig.3 Schematic Diagram of a DSTATCOM

Figure-3 the shunt implanted current Ish cures the voltage list by changing the voltage drop over the structure impedance Zth. The estimation of Ish can be obliged by changing the yield voltage of the converter. The shunt imbued current Ish can be made as ,

Ish = IL – Is = IL – (Vth – VL)/Zth - 4.1

- 4.2 The marvelous power implantation of the D-STATCOM can be imparted as,

- 4.3 It may be referenced that the ampleness of the D-STATCOM in altering voltage list depends upon the estimation of Zth or accuse measurement of the load transport. Exactly when the shunt mixed current Ish is kept in quadrature with VL, the perfect voltage correction can be cultivated without imbuing any unique power into the system. On the other hand, when the estimation of Ish is constrained, a comparative voltage review can be practiced with least clear power imbuement into the system.

4.2.1 Voltage Source Converter

A voltage-source converter is a power electronic device, which can create a sinusoidal voltage with any required enormity, repeat and stage edge. Voltage source converters are commonly used in adaptable speed drives, yet can in like manner be used to direct voltage dives . The VSC is used to either thoroughly displace the voltage or to implant the 'missing voltage'. The 'missing voltage' is the differentiation between the apparent voltage and the real. The converter is consistently established on a type of imperativeness accumulating, which will supply the converter with a DC voltage. The solid state contraptions in the converter are then changed to get the perfect yield voltage.

Control Scheme for the DSTACOM

The purpose of the control plot is to keep up predictable voltage significance at the point where an unstable weight is related, under system aggravations. The control system just measures the rms voltage at the load point, i.e., no open power estimations are required. The VSC trading approach relies upon a sinusoidal PWM methodology which offers straightforwardness and incredible response. Since custom power is a tolerably low-control application, PWM methods offer a more versatile decision than the Fundamental Frequency Switching (FFS) methodologies bolstered in FACTS applications. Furthermore, high trading frequencies can be used to improve the capability of the converter, without causing immense trading disasters .

The controller input is a screw up banner procured from the reference voltage and the regard rms of the terminal voltage evaluated. Such misstep is set up by a PI controller the yield is the point δ, which is given to the PWM banner generator. It is basic to observe that for this circumstance, round aboutly controlled converter, there is dynamic and responsive power exchange with the framework in the meantime: a slip-up banner is gotten by differentiating the reference voltage and the rms voltage evaluated at the pile point. The PI controller process the slip-up banner makes the normal edge to drive the goof to zero , i.e., the store rms voltage is reclaimed to the reference voltage.

Published By:
Blue Eyes Intelligence Engineering
& Sciences Publication (BEIESP)
© Copyright: All rights reserved.

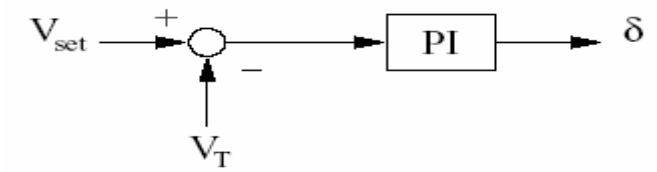

Fig.4 Indirect PI controller

The sinusoidal flag Vcontrol is stage tweaked by methods for the edge □.

i.e., VA = Sin (ωt +δ), - 4.4
VB= Sin(ωt+δ-2π/3), - 4.5
VC = Sin (ωt +δ+2π/3). - 4.6

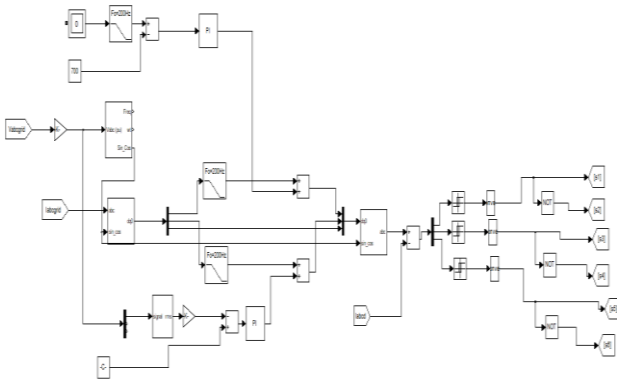

Fig. 5 Phase-Modulation of the control signal

The changed banner Vcontrol is pondered against a triangular banner in order to make the trading signals for the VSC valves. The essential parameters of the sinusoidal PWM plot are the plentifulness balance rundown of banner, and the repeat change record of the triangular banner. The sufficiency document is kept fixed at 1 pu, in order to get the most raised real voltage part at the controller yield .
is the apex adequacy of control banner, is the apex plentifulness of triangular banner. The trading repeat is set at 1080 Hz. The repeat change list is given by,
mf = fs/f1= 1080/60 = 18
Where f1 is the fundamental repeat.

The tweaking edge is associated with the PWM generators in stage A. The plots for stages B and C are moved by 240 degrees and 120 degrees, independently. It will in general be found in that the controlexecution is kept clear by using just voltage estimations as the analysis variable in the control plot. The speed of response and quality of the control plot are clearly showed up in the amusement results.

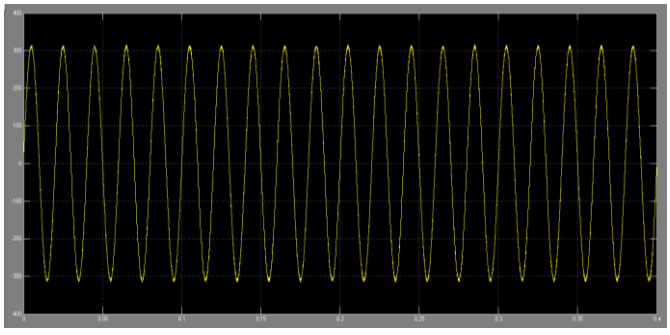

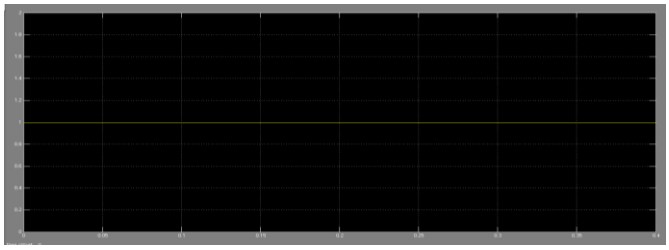

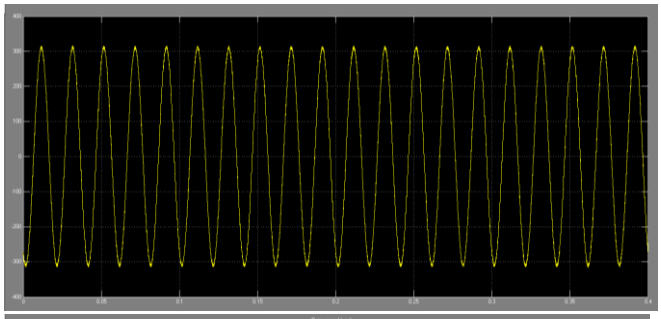

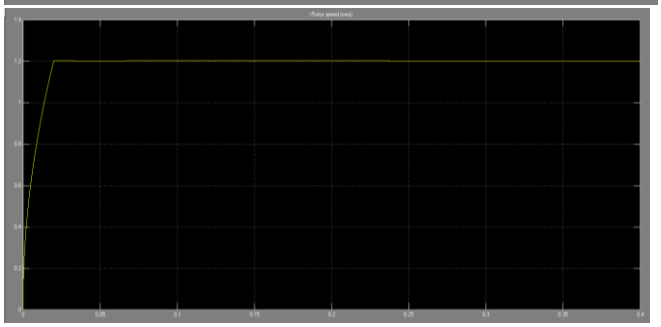

IV. CONCLUSION

This paper has exhibited the power quality issues, for example, voltage plunges, swells and interferences, results, and moderation systems of custom power electronic gadget D-STATCOM. The plan and utilizations of D-STATCOM for voltage hangs, interferences ands swells, and far reaching results are exhibited. Another PWM-based control conspire has been actualized to control the electronic valves in the two-level VSC utilized in the D-STATCOM. Instead of key recurrence exchanging plans officially accessible in the MATLAB/SIMULINK, this PWM control conspire just requires voltage estimations. This trademark makes it in a perfect world appropriate for low-voltage custom power applications . It was additionally seen that the limit with respect to control pay and voltage guideline of D-STATCOM relies upon the rating of the dc stockpiling gadget.

REFERENCES

1. Indirect Matrix Converters as Generator– Grid Interfaces for Wind Energy Systems" Ekrem Karaman, Student Member, IEEE, Mehdi Farasat, Member, IEEE, and Andrzej M. Trzynadlowski, Fellow, IEEE.
2. Yuya Izumi, Alok Pratap, Kosuke Uchida, Akie Uehara, Tomonobu Senjyu and Atsushi Yona. "A Control Method for Maximum Power Point Tracking of a PMSG-Based WECS utilizing Online Parameter Identification of Wind Turbine". IEEE PEDS 2011. Singapore,5 - 8 December 2011

Published By:
Blue Eyes Intelligence Engineering
& Sciences Publication (BEIESP)
© Copyright: All rights reserved.

3. Yang Liyong, Yuan Peie, Chang Zhenguo, Chen Zhigang, Li Zhengxi. "A Novel Control Strategy of Power Converter Used To Direct Driven Permanent Magnet Wind Power Generation System". IEEE Power Electronics and Intelligent Transportation System (PEITS), second International Conference. vol. 1, pp. 456 – 459, Dec. 2009
4. ME Haque, KM Muttaqi and M Negnevitsky. "Control of a Stand Alone Variable Speed Wind Turbine with a Permanent Magnet Synchronous Generator". IEEE Power and Energy Society General Meeting - Conversion and Delivery of Electrical Energy in the 21st Century. pp.1-9, août2008.

AUTHORS PROFILE

P Vikas, UG student, Electrical and Electronics Engineering, Koneru Lakshmaiah Education Foundation, Vaddeswaram-522502, AP, India. His Research interests includes Power Systems

S Parthasarathy, UG student, Electrical and Electronics Engineering, Koneru Lakshmaiah Education Foundation, Vaddeswaram-522502, AP, India. His Research interests includes Power Systems

K V Siva Reddy, working as assistant professor and currently pursuing Ph.d from the department of Electrical and Electronics Engineering ,K L deemed to be University, Vaddeswaram, Guntur dist, A.P,INDIA, has completed Master in Technology from VIT university Vellore in SESNOR SYSTEM TECHNOLOGY in 2009. Interested Domains are MEMS Sensor Design and Realization, IOT based Automation System Design , Has 10 years of Teaching experience in various subjects related to Measurements and Automation. certified as CLAD from National Instruments(NI). Received 3 times BEST Teacher Award from the working University. Feel pleasure to work on projects related to Social relevant technical issues as a part of SMART VILLAGE REVOLUTION.

Published By:
Blue Eyes Intelligence Engineering
& Sciences Publication (BEIESP)
© Copyright: All rights reserved.