International Journal of Engineering and Advanced Technology (IJEAT)
ISSN: 2249-8958 (Online), Volume-8 Issue-4, April 2019

Performance Enhancement of Asynchronous Machine with Super Capacitor

Malligunta Kiran Kumar, DhanekulaVallisa Datta, T Vijay Muni

Abstract*: The paper proposes the supercapacitor which solves the high current starting problem of three phase induction machine when it is subjected to load condition.Super capacitor is a energy storage device,it will stores the energy in it at the time of normal condition,and at the time of load condition it will supplies the energy which is stored in it to the three phase induction machine.The three phase induction machine and DC motor are coupled by using a mechanical shaft.Super capacitor is place across the DC motor and a controller also used in this system. A circuit is designed like this by using MATLAB software to observe the problem of starting high currents in three phase induction machines.

Index Terms: Three Phase Induction Motor, Supercapacitor, Standalone Battery, DC Motor, Controller.

I. INTRODUCTION

The three phase induction machine is designed to operate at the condition of three phase supply.It is also named as asynchronous motor.The principle of the three phase motor depends upon the production of the rotating magnetic field.The main reason for the popularity of the three phase induction machine is due to its vigorious construction and high factor of reliability.A three phase induction machine is used for different types of applications with various speed requirements and various load requirements.The three phase induction machines are the most commonly used electric machines in the industries.At present these motors play a key role in the industrial applications.They will run at at the constant speed from no load condition to full load condition.Speed depends upon the frequency and they are not suitable to control the speed.The three phase induction machines are simple in construction,available at lower price,they are rugged,they can be maintained easily and they are manufactured with the industrial applicants which suits the requirements of the industries.The three phase induction machine have stator and rotor,the stator will carry a three phase winding ,it is called as the stator winding and the rotor carries a winding which is short circuited.It is called as rotor winding[1].The three phase induction motor will convert the mechanical energy into the electrical energy.

At the time of the starting of three phase induction motor by the direct online switch the current drawn will be three times of its rated capacity.This leads to destruction of the motor.Because if the current drawn is more losses will be occurred in the machine and more heat will be generated in the motor. Batteries,are the most commonly used energy storage techniques with a great benefits with their higher degree of modulization and lower charging of losses etc…, But, there are minus points like batteries have the less life span and environmental pollution.The batteries highly maintained prices and high values will be a patient configuration of the normal flywheel energy storage configuration system of the planned system,their usage will be from high power short time application. Parallelly the other side, the flywheel energy storage system (FESS) had a bonus like greater power density in the span of short-time storage application. FESS is superior when compared to other energy storaging system because of it's high potency, long span life time and no pollution to the surroundings[2].There are in the main 2 teams of operations: first team is for the facility supply smoothing, like wind or electrical phenomenon power generating system; the second team is for the variation of load cases , like the step load and high unsteady load..But the FESS system has one disadvantage, it is too weighted for a system.So to replace this FESS a component named supercapacitor is used.It is less weight compared to FESS.

II. MODELING OF CIRCUIT DIAGRAM

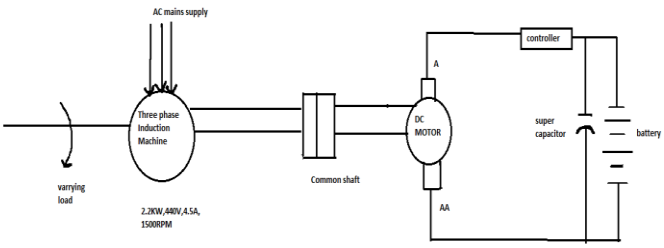

Fig.1 Block diagram

Generally the starting currents of the induction motors are more than 3 times of the normal full load current.So different methods are proposed inorder to reduce the starting currents which are high.The proposed systems are direct online method,star delta method and soft starters are also used to reduce the high starting currents.The purpose of these starters is not only the starting to start the motor but also to reduce the heavy current occurs at starting stage and to provide the protection at the stages of heavy loading[3].But the disadvantage with them is in software they cannot control the speed and supply the energy to the three phase induction motor. So in that place super capacitor is used.

Manuscript published on 30 April 2019.
***** Correspondence Author (s)
Malligunta Kiran Kumar, Department of EEE, Koneru Lakshmaiah Education Foundation, Vaddeswaram, A.P, India.
DhanekulaVallisa Datta, Department of EEE, Koneru Lakshmaiah Education Foundation, Vaddeswaram, A.P, India.
T Vijay Muni, Department of EEE, Koneru Lakshmaiah Education Foundation, Vaddeswaram, A.P, India.

In the hardware condition there is a possibility of observing the high starting currents when it is subjected to heavy load.In normal condition there will be no heavy starting current problems,but when it is load condition then these heavy starting currents will takes place and also when the motor is subjected to the load the speed will be reduced and after some time the speed will not be there in a constant position.

In the given block diagram the three phase induction machine is coupled mechanically with the DC motor by using the mechanical shaft.The performance which was done by connecting the circuit as shown in the block diagram.The AC supply will be given to the three phase induction motor.Thecontroller,supercapacitor, battery are placed according to that circuit.At the normal condition the supply to DC motor is given by the battery.That means when no load condition the supply to the three phase induction machine is given by the battery and when it is subjected to load condition the battery looses its form.So at the time the super capacitor takes the responsibility of supply of energy to three phase induction machine. During the normal condition the super capacitor will be in the state of charging mode,that means the super capacitor is storing the energy in it.Whenever there is a usage of energy then the super capacitor will supplies its stored energy to complete the required work. At the time of load condition the battery will not work and this supercapacitor will acts as a supplier and supplies the energy to the DC motor.

2.1. Supercapacitor:

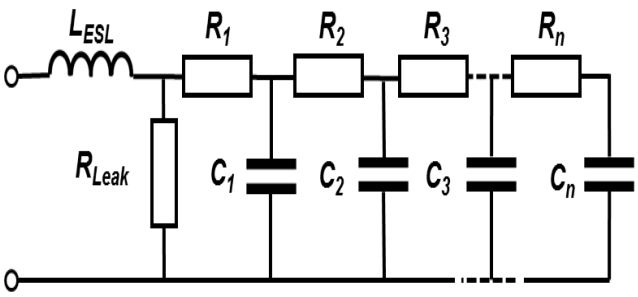

Fig.2 Supercapacitor equivalent circuit

Generally a super capacitor means a capacitor which has a high capacitance values when compared to the other capacitors.Then can store the energy more than 10 to 100 times of the electrolytic capacitors.They accept and they can deliver the energy much speeder than the batteries.They can also tolerate the charge cycles and dischargable cycles when compared to the rechargeable batteries[4].This supercapacitor is designed in the MATLAB software by using the similar blocks in that software.

Supercapacitors are used as the backup applications of power because they have great lifespan and also they have the high energy density when compared to the normally used capacitors[5].These are also used in many applications which requires the rapid charge and discharge of the cycles instead of long term energy storage compact like in the buses,trains,elevators,carsetc….,. The charging and the discharging process in the batteries will be slow when compared to the supercapacitors.The super capacitors will use a different style of storage mechanism.

2.2. Converter:

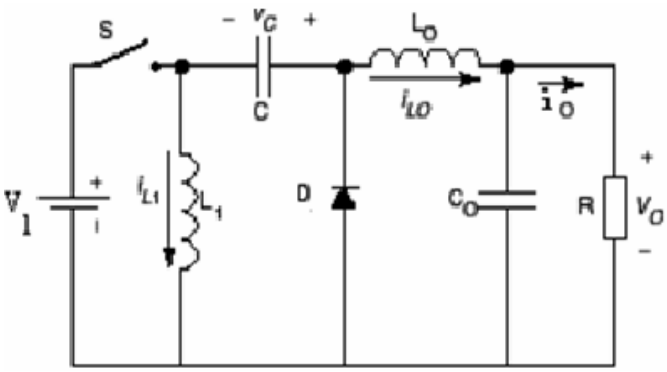

Fig.3 DC-DC Converter equivalent circuit

DC-DC converter is a type of electromechanical device which will convert the direct current source from stage of voltage level to a stage of another voltage level.It is a king of electric power converter.These are used in many portable electronic gadgets like the mobile phones,laptopsetc,,,,.Primarily they are supplied with power from batteries[6]. A buck DC-DC converter will step down or decreases the voltage from its supply which is input to its load which is output.The switching converters which are similar to buck converters provide the more power efficiency to the DC-DC converter then linear regulators[7].

If the duty cycle of the transistor switch which is present in a converter is changed then automatically the voltage will be increased or decreased.The duty cycle will be maximum for the case of boost converter and for the case of buck converter the duty cycle will be minimum.DC-DC converter voltage can be controlled by the volatage and current control method.This controllers will control the energy in all the blocks of the system.They will also control the current flow in the load.

III. RESULTS AND ANALYSIS

3.1.Waveforms for stator currentsspeed and torque

The first waveform i.e 7a is the waveform for the stator currents.At the starting condition when motor is subjected to load that is set in the mechanical shaft available in Simulink library.Then fluctuations(high starting curents) occurred in the signal and after that super capacitor gave the supply and the high starting currents are reduced.The second waveform is speed(7b) at starting when load is applied, the the speed varies and after that supercapacitor is added at the starting condition,then automatically the speed became stable at 1500rpm.In third figure that is torque(7c) if more load is added to the motor by using the mehanial shaft then the torque value is decreasing and after super capacitor came into existence and gave supply then the torque value is maintained at constant level (more than zero in the Fig(7c)).The present graph is taken by adding the medium load option which is available in mechanical shaft.

Published By:
Blue Eyes Intelligence Engineering
& Sciences Publication (BEIESP)

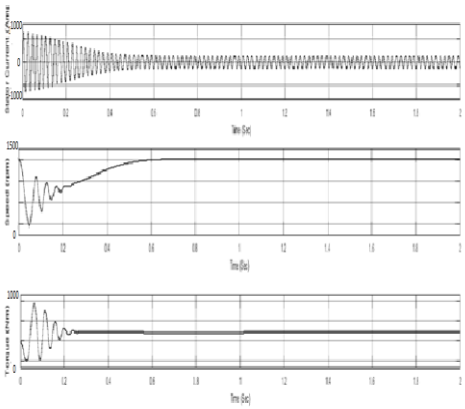

Fig.4 Waveforms for stator currents,speed and torque

IV. CONCLUSION

The theme of doing the work in matlab is to show how an super capacitor will solve the problem of 3 phase induction motor and DC motor when they are subjected to the load conditions.The starters like soft starters,direct online method and star delta method can be used but the main disadvantage with them is they annot control the speed.This supercapacitor have all the requirements like great power density,can controls the speed and less weight compared to Flywheel energy storage system.It is the new technology with all the above qualities.when battery cannot be able to supply the energy then this supercapacitor acts like battery and supplies energy whenever there is need.

REFERENCES

1. Asgari S.H ; M. Jannati ; N. R. N. Idris "Modeling of three-phase induction motor with two stator phases open-circuit". Conference of IEEE on Energy Conversion (CENCON) 2014.
2. Shi Linjun ; ShaoBuchen ; JunLiu ; MinHui Zhuang ; GuoQingTang" Design of robust FESS-based stabilizers in multi-machine power systems". 2011 International conference on advance power system automation and protection.
3. K. Pillay ; M. Nour ; K. H. Yang ; D. N. Datu Harun ; L. K. Haw"Assessment and comparison of conventional motor starters and modern power electronic drives for induction motor starting characteristics". 2009 IEEE Symposium on Industrial Electronics & Applications.
4. Pay.S, and Baghzouz.Y, Senior Member, IEEE, "Effectiveness of Battery-Supercapacitor Combination in Electric Vehicles", 2003 Bologna Power tech Conference Italy..
5. Zhang Haoming ; YukunSun ; Ding Shenping ; Wang Yinghai"Application of super capacitor with full- digital converter in hybrid electric vehicle energy transmission system". 27th Chinese Control Conference 2008
6. Tasi-Fu Wu ; Yu-Kai Chen" Modeling PWM DC/DC converters out of basic converter units". IEEE transactions on power electronics.
7. SriramalakshmiPalanidoss ; V S Theja Vishnu" Experimental analysis of conventional buck and boost converter with integrated dual output converter".2017 Conference on International Electric,electronic,computer optimization techniques.

AUTHORS PROFILE

M. Kiran Kumar received B.Tech Degree in Electrical and Electronics Engineering from Gokula Krishna College of Engineering and Technology, JNTU, Hyderabad, India, in 2007, M.E. Degree in Power Electronics and Drives from SreeSastha Institute of Engineering and Technology, Anna University, Chennai, India, in 2010 and Ph.D in Electrical and Engineering at KoneruLakshmaiah Education Foundation, Guntur, India,In 2016. His research interest includes Switched Reluctance Machines, Power Electronics and Control Systems.

DhanekulaVallisa Datta pursuing B.tech Degree in Electrical and Electronics Engineering Koneru Lakshmaiah Education Foundation, Vaddeswaram, Guntur, Andhra Pradesh, India
Vallisa.datta207@gmail.com

Published By:
Blue Eyes Intelligence Engineering
& Sciences Publication (BEIESP)