International Journal of Engineering and Advanced Technology (IJEAT)
ISSN: 2249-8958 (Online), Volume-8 Issue-4, April 2019

Emergency Driving Assistance for Debilitating Drivers

Savya Nidhi, D. Sri Sai Praveen, M.V Rama Krishna, Raju Anitha

***ABSTRACT** Communication has given a lot to our human world and communication among things is going to make it easier and help to solve most of our real-world problems by connecting with things. The Internet of Things meant for the communications among the things which can be either electronic products, our home furniture, vehicles or any other thing, has already come with its solutions to different real-world problems. And among all other problems, there is this life taking problems that happens to drivers while driving their four-wheelers. Drivers may get unconscious while driving that may cause sway further causing accidents, dangerous, isn't it? No one knows what happens next and because of which the future is hard to predict. So why not to make the safety measures available that can save one's life in such conditions.This paper proposes an emergency driving assistance simple robotic-car model for debilitating drivers where the system will help those drivers during their unconscious state while driving which might be the cause of drowsiness, fatigue or stress by sending its current location to the registered phone numbers of the concerned persons along with the urgent help message and also to thinkspeak database for the further analysis of the data collected from multiple numbers of devices. And at the same time, this system is going to start the self-driving mode of the car where the car will stop at the safe parking area on the road and turns on its red lights for safety. This proposed system's working is based on the output given by the already proposed system for detecting the unconsciousness of the driver while driving caused by drowsiness, fatigue or stress in their body. The proposed system uses mobile communication technology for sending information about the unconsciousness of the driver to the concerned sources of help. The GPS and GSM modules are used for calling and sending the urgent help message containing the current location of the vehicle to the given phone numbers were GPS is global positioning system and GSM is a global system for mobile communication. And for the safe driving and parking assistance ultrasonic sensors which can detect any obstacle on its way within 13 feet along with the continuous line marking detector i.e., infrared sensors. So the car willbe no longer under the drivers control and the proposed system will help the moving car to stop when it detects the continuous white marking under its left wheel and turn on the red lights for its safe parking period of time on the road avoiding any kind of accident with other objects beside it due to sway.*

***Keywords:** communication, internet of things, real-world problems, robotic-car model, driving assistance, GSM module, GPS module, Arduino UNO*

Manuscript published on 30 April 2019.
***** Correspondence Author (s)
Savya Nidhi*, Students Dept. of CSE, Koneru Lakshmaiah Education Foundation, India
D. Sri Sai Praveen, Students Dept. of CSE, Koneru Lakshmaiah Education Foundation, India
M.V Rama Krishna, Students Dept. of CSE, Koneru Lakshmaiah Education Foundation, India
Dr Raju Anitha, [4]Assoc. Prof. Dept. of CSE, Koneru Lakshmaiah Education Foundation, India

I. Introduction

For the safe driving, the driver must drive the vehicle properly and for the proper driving, the driver must be in a good stateto be able to pay attention and do his/her sound judgement while driving. The debilitating state of a driver while driving causes to sway which further causes physical injuries, death and significant economic losses because of the unbalanced driving as the driver will not be able to drive the car properly and the other vehicles moving along may collide and get into the accident with the same vehicle. The driving experience of a driver doesn't help in such situations. According to the National Highway Traffic Safety Administration, 94% of the total road accidents are caused because of human error wherein the rest of six percent, two percent of accidents were caused because of the environment issues, two percent were caused because of the vehicles itself as the car makers knowingly cover up defects for their own reasons and the last 2 percent of the accidents came from "unknown" causes. And from that 94%, most of the accidents occur due to unconsciousness of the driver while driving. So, for safety, there must be some alternatives which can help one in such life taking condition while driving. The wearable device-based systems are available in the market where they detect the drivers' state and finds out the drowsiness, fatigue or stressed state of a driver in which the driver becomes unconscious and cannot handle the car. So, it emits the signal which is when received by the microcontroller it further activates the self-driving mode of the car where the wheels of the car gets under the control of the microcontroller which drives the car by giving direction to the wheels whether to moveforward, turn left, right or to stop based on the inputs it gets from the sensorsused tocheck the distance of the obstacles from the car, and moves the car accordingly towards the continuous white markings made on the road under the left wheel of the car giving the red signal for the following vehicles on its back making it safe for the drivers on the road. And at the same time, it also does the phone call for first 10 seconds and after disconnecting the phone call itsends the urgent help message to the emergency contact numbers registered which may be of any family member or a friend or the owner of the vehicle or the other traffic emergency numbers saved in it. This urgent help message contains the text message asking for the help followed by the current location of the vehicle so that one can easily come and help the driver out from that safely parked vehicle. For calling and messaging purpose the proposed system uses Global System for Mobile Communication (GSM module) and for finding the current location of the vehicle being parked for the emergency help it uses the Global Positioning System(GPS module). This information is also collected in a thingspeak database for further data analysis purpose.

Published By:
Blue Eyes Intelligence Engineering
& Sciences Publication (BEIESP)

The Self driving mode of the proposed system uses Ultrasonic sensors of higher range to find its distance from the nearing obstacle to avoid accident and the infrared sensors to detect the continuous white marking on the edge of the road which helps the car to stop the moving wheels when the white marking comes under the left wheel of the vehicle so that it stops on the safe side of the road. When the car is not moving anymore anyone can come and help the unconscious driver in the car.

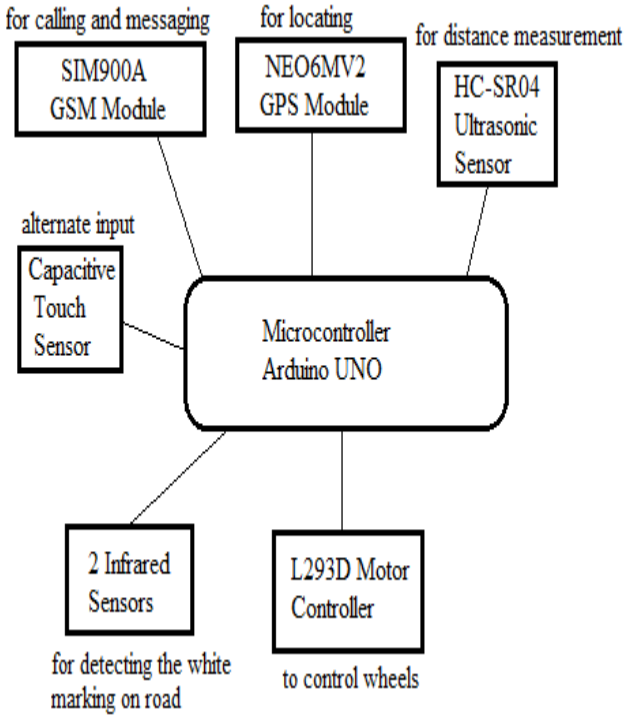

Figure 1: Overall block diagram of the emergency driving assistance for debilitating drivers

As mentioned in the figure1 Arduino Uno is used as a microcontroller which takes control over all the other modules used in the system where the first module is about receiving the input signals from the wearable devices worn by the driver for continuously monitoring the state of the driver while he/she is driving the vehicle. When the Arduino Uno receives the high-value signals from the devices worn by the driver for detecting his/her state, it activates the other following modules where second module is for autonomous driving phase of the car which is supposed to stop the car on the left side of the road by using the ultrasonic sensors and infrared sensors. And the third module is for the calling purpose and sending the urgent message to the validregistered numbers by using GSM and GPS modules.

II. Autonomous driving assistance mode for robotic-car model

In the proposed system, the car like robotic model thus prepared worked for the autonomous driving mode of the car which when initiated, it worked on the basis of theoutputsfromtheultrasonicsensor and Infrared sensorswhich wasgiven to the Arduino UNO, microcontroller as an input to direct the wheels accordingly which was done by the sketch embedded into the microcontroller for directing the wheels. The block diagram for the autonomous driving mode is represented by the figure2 given below.

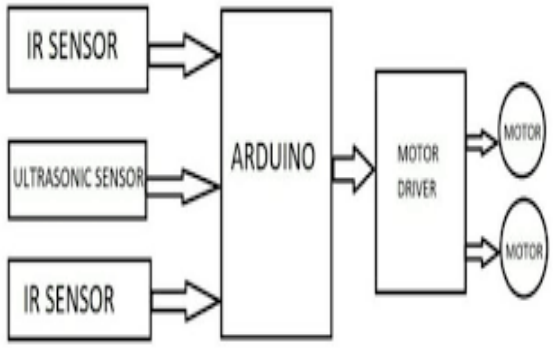

Figure 2: Overall block diagram for the autonomous robotic-car model

a. HC-SR04 Ultrasonic Sensor

The ultrasonic sensor was used for obstacle detection. This sensor transmits the ultrasonic waves from its head and again receives the reflected ultrasonic waves from an object. There are several applications of ultrasonic sensors like an alarm system, automatic door openers etc. The ultrasonic sensor has a very high performance and isvery compact and it has both the transmitter and receiver. It consists of four pins VCC pin to offer a 5V power supply to the sensor, trigger pin gives TTL pulses, echo pin to get the output from the sensor and the ground pin. According to this sensor results the obstacles were detected, and the car runs in safely and slowly moves towards the left after detecting the white line which was further detected by using infrared sensors. Ultrasonic sensor HC-SR04 is shown in Figure3 given below.

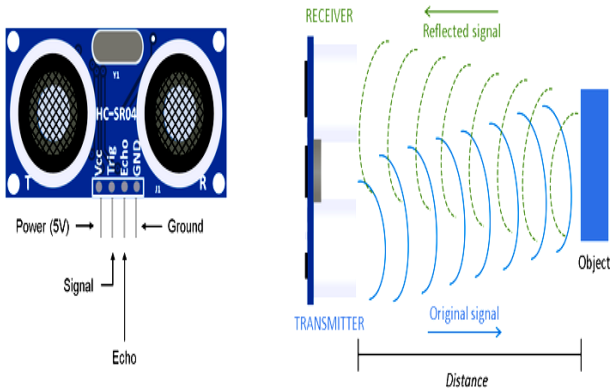

Figure 3: Ultrasonic sensor HC-SR04

Theultrasonicsensorisoneofthebesttechniqueswhich isused forsensingthe obstacle. The Ultrasonicsensormodule "HC-SR04"workson"Echo"conceptwhichissomethingyou get when sound reflects after it reaches any surface. The

Published By:
Blue Eyes Intelligence Engineering
& Sciences Publication (BEIESP)

travellingtimeofultrasonicwavesis343m/s. This much of speedis meticulous for MCU' sinthe microcontrollertomeasure accurately. Practically the waves reflect from the surface4metersawayin15ns.Thisultrasonicwave doesnotaffectthehumans. Theultrasonicsensorismostly used for the distance measurement application. These sensors can detect the obstacles present in front of them. The ultrasonic sensors used in the system produces sound waves of higher frequenciesthathumanscannot process which makes themideal for quiet environments. They are simple in design, do not consume much electricity and are relatively inexpensive.

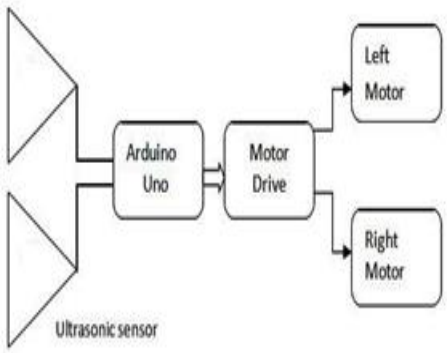

Figure 4: Basic block diagram

b. Infrared sensor

Figure 5: LM393 Infrared Sensor

The Infrared sensor is used for detecting the white marking on roads, in this we used an array of two sensors units. Each unit contains an infrared transmitter and infrared receiver both the sensor units are placed on the front side of the car where it can easily detect the line after detecting the line the car safely parks at that position.IR sensor reflects the light when it is on the white surface but it does not reflect on the black surface so we wrote the code to make the opposite action on that particular input. Which is like motor must rotate when the input from the IR sensor directly above the white line is low and the other sensor inputs are high. Similarly, the motor must stop when the IR sensor above the white line is high irrespective of other inputs. Using this property of IR sensor car can easily detect a while line of black surface or vice versa.

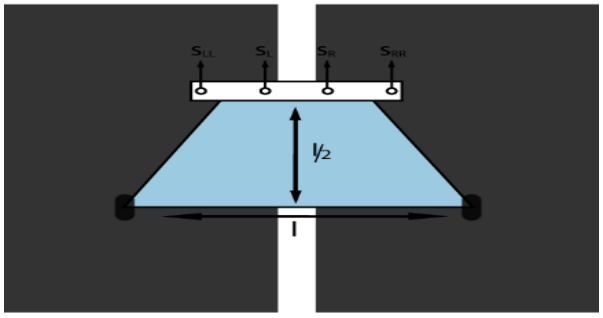

Figure 6: IR sensor working principle

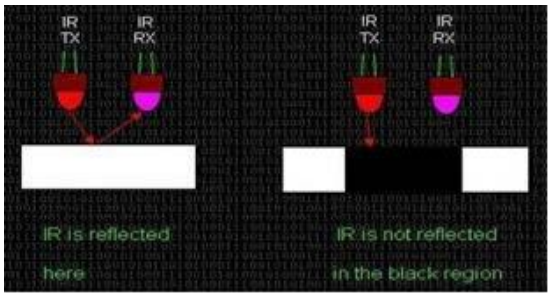

Figure 7: Car's line detecting block diagram

Figure 8: Sample Road Track

c. MOTOR DRIVE MODULE (L293D)

The L293D is mostly used H-bridge driver IC. We can use the PWM circuit, but it increases the cheaparea. By connecting the two-dc motor to this 16 pin IC L293D we can move the car in any direction. The table gives operation. The rotational speed of a DC motor is depending on voltage, and the torque is depending upon the current. Speed control is obtained by the variable supply voltage and electronic controls. But the system had microcontroller for varying the speed by changing the pulse width of a pulse going from controller to motor driver. The motor driver runs the dc motors according to the code given by the readings of the sensors.

Published By:
Blue Eyes Intelligence Engineering
& Sciences Publication (BEIESP)

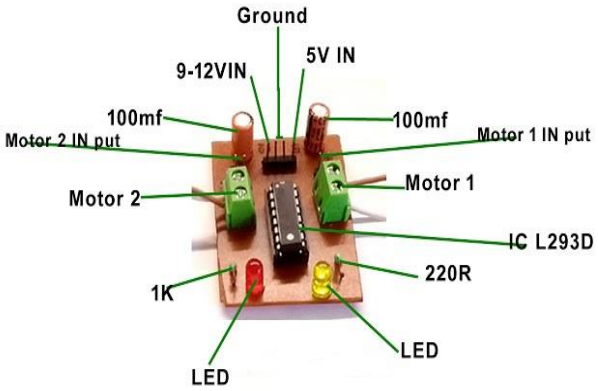

Figure 9: L293D motor driver

d. **DC MOTOR**

Figure 10: DC motor

In the proposed system we have used two 12v dc geared motor for getting more torque. By controlling the speed of DC motor system Control the overall speed of the car. As well as by controlling the direction and rotation of each DC motor, the system is monitoring the direction of the car.

A1	A2	B1	B2	Motor
1	0	0	1	Clockwise
0	1	1	0	Anti-Clockwise
1	1	1	1	Stop
0	0	0	0	Stop

Figure 11: L293D motor operations table

III. CALLING and MESSAGING Phase of the system

In this phase, we have used the two different modules in the proposed system, for the calling and sending its current location to the concerned person who can help when needed. The two modules used are SIM900A GSM module and NEO6MV2 GPS module.

a. **SIM900A GSM Module:**

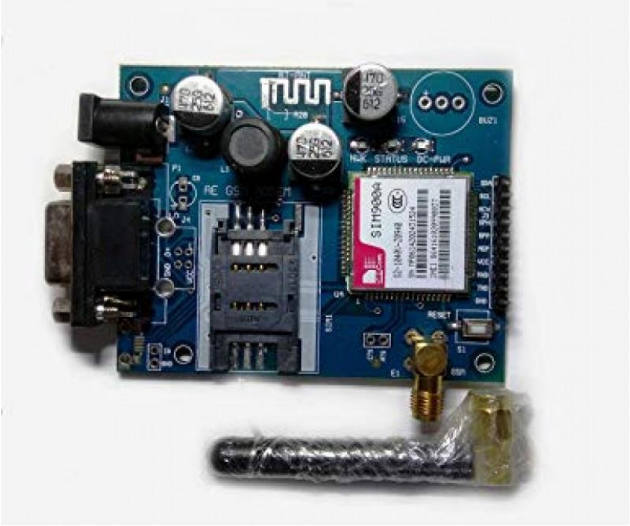

Figure 12: SIM900A GSM Module

The SIM900A GSM Module performs the calling and messaging function of the proposed system where the Airtel simcard with enough balance was put into the sim slot of the module and the antenna received with the module was connected which is supposed to receive the network signals available and there were three indicators led to three different colours i.e., red, blue and green. The green led signals the network status and blinks accordingly. The blue led was for the status of the sim900a module if it's in the network area or not. And the red led had continuous light for indicating the on/off mode of the module. In the sketch, we used the AT commands for this module to work and the libraries used were SoftwareSerial for its usage of the scope in the functions commanding the AT commands. SIM900 is the scope we used in our sketch and the Tx and Rx pin of the SIM900A GSM module was connected to the Rx and Tx pins of the Arduino Uno board after uploading the sketch to the microcontroller as it cannot be uploaded while the Rx and Tx pins are connected. And the ground pin of the GSM module was connected to the ground pin of the Arduino UNO board. The power supply of 12 volts was supplied through the 12 volts output adaptor. And while modelling we had to use the 6F22 9V battery

b. **NEO6MV2 GPS Module**

Published By:
Blue Eyes Intelligence Engineering
& Sciences Publication (BEIESP)

Figure 13: NEO6MV2 GPS Module

The GPS module i.e., Global Positioning System was used in the proposed system as a receiver module where the module receives information from the GPS satellites and obtains the geographical position of the device. The GPS receiver obtains the data as a whole NMEA (National Marine Electronics Association) format text and only the latitude and longitude coordinates are taken from it by using the Arduino TinyGPS library. And this is how the GSM module described in the previous point sends the SMS to the number specified in the sketch developed for the system. In the GPS module that we used there were a total of four pins; ground, VCC, Tx and Rx where Tx pin is for transferring of the data and Rx pin is for receiving the data, VCC is for the power supply to the module and the ground is for grounding the circuit made with the microcontroller Arduino Uno. It also has the pin for its square-shaped box like antenna used for connecting to its network.

IV. CIRCUIT DESCRIPTION

The proposed system's circuit is excited by 9V power supply, the HC-SRO4 module,Infrared module,GPS module, GSM module and the alternate input source which is touch sensor areconnectedtotheArduino UNO power supply of 5 volts through the small breadboard,andthe L293D motor driver is also connected to the same supply for the 5 volts pin for its microcontroller chip and the other pin for 12 volts is connected to the external 6F22 9V battery for the motors used in the system to take the control over the wheels.

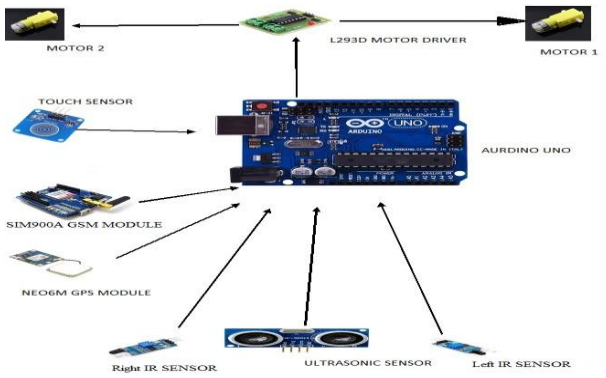

Figure 14: pictorial diagram of the components used in the system

The complete circuit diagram of the connections made in the system is explained through figures given below.

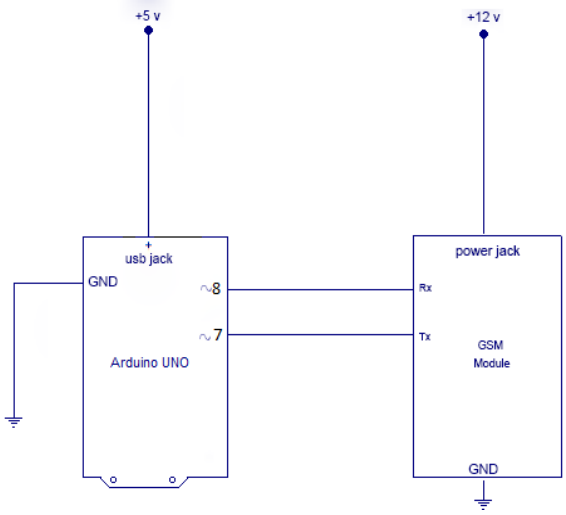

Figure 15: GSM module interfacing with Arduino UNO

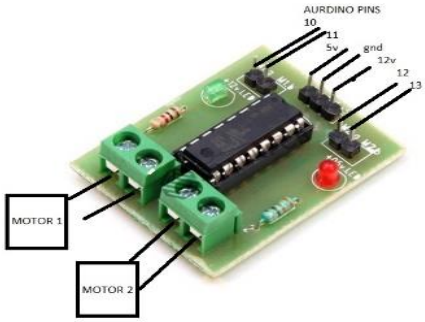

Figure 16: Circuit diagram for L293D motor driver with Arduino UNO board

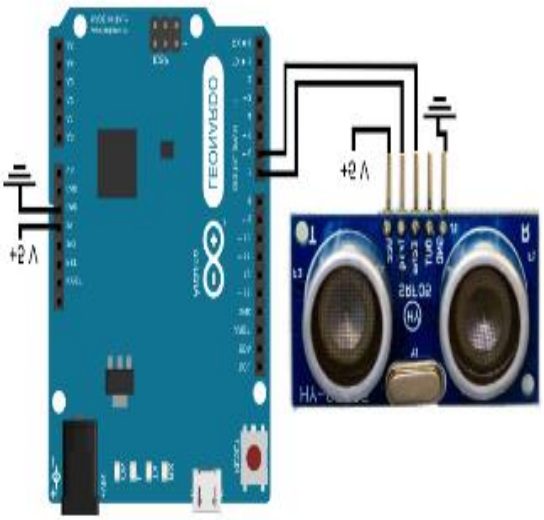

Figure 17: Circuit diagram of Ultrasonic Sensor and Arduino UNO connection

Published By:
Blue Eyes Intelligence Engineering
& Sciences Publication (BEIESP)

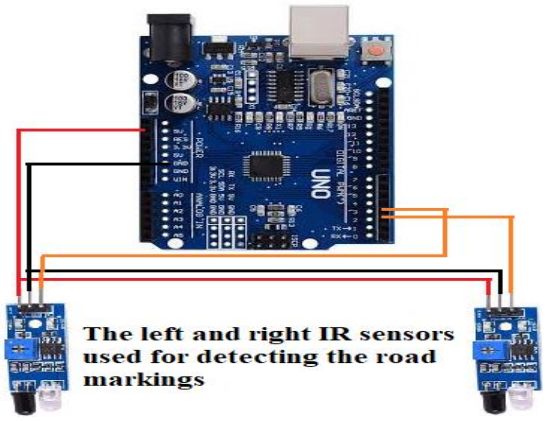

Figure 18: Circuit diagram for Infrared Sensors and Arduino UNO connection

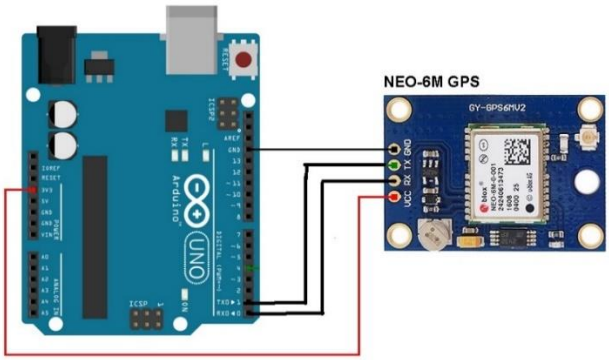

Figure 19: GPS module interfacing with Arduino UNO

V. RESULT

This paper presents the emergency driving assistance for debilitating drivers where the proposed system was built as a robotic model similar toa car. The system was built by using the sensors and Arduino as a microcontroller with the help of which the proper driving assistance for those drivers inneed became possible. The complete system was based on the outputs from the driver's state monitoring devices and the system thus built was able to send the current location of the vehicle by using the GSM and GPS modules used in the prepared model and at the same time the self-driving mode of the car gets initiated for the proper assistance where the car stopped after detecting the white line under its left wheel. This was possible by using the ultrasound sensor and the infrared sensors respectively.

Figure 20: Experimental setup of the robotic-car model

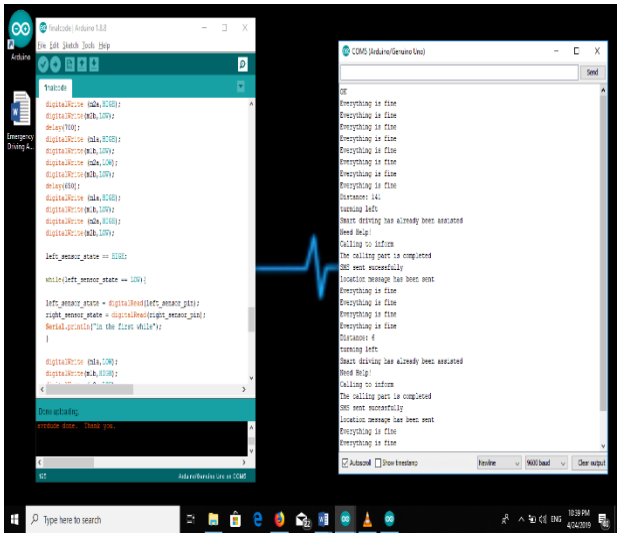

Figure 21: Screenshot of the output

VI. CONCLUSION

This paper proposed the autonomous driving assistance of the car modeled robot for the debilitating driversbased on the inputs from its reference model i.e., wearable based device which monitors the heartbeat, blood volume in the blood vessels, cardiovascular activity, temperature, skin conductance along with the driver's physiological and behavioral information of the driver and sends the respective signals to the microcontroller which further helps the unconscious driver by taking the good control over the moving car for stopping it on the left side of the road and sends the information to those reliable source of help for the driver. While driving the car one can face any kind of health issues and that should not be the reason for the road accidents as we already know it's hard to predict the future health issues of any living body.

The proposed system concept is easy for the real-time implementations which is prepared to ease the driving problem issues going on in the present time with many people,where one may face the unconsciousness while driving because of several reasons. And evenif the driver gets any kind of health issues while driving his/her car then he/she can be helpedproperly and on time as the moving car was stopped at the proper side of the road and also the location sent in the message to the receiving numbers will be easier to locate the vehicle on the highway. This can be more helpful to those who drive big good transport vehicles on the national/international highways as they have to travel to longer distance and for a longer period of time. The continuous driving of the driver may hurt them and their body causing the unconsciousness which may be fatal for the driver.

Published By:
Blue Eyes Intelligence Engineering
& Sciences Publication (BEIESP)

REFERENCES

1. Minho Choi, Gyogwon Koo, Minseok Seo, and Sang Woo Kim, "Wearable Device-Based System to Monitor a Driver's Stress, Fatigue, and Drowsiness", IEEE Transactions on Instrumentation and Measurement, Vol.67, No.03, March 2018
2. Pandiyan Pitchai, Kiruthikamani Govardhanaraj and Saranya B, "Intelligent Driver Monitoring and Vehicle Control System", International Journal for Scientific Research and Development, Vol.5, Issue 09, ISSN: 2321-0613, December 2017
3. T.Shwetha, J.Panduranga Rao and B.Sreenivasu, "IoT Based Driver Alertness and Health Monitoring System", IJARECE, Volume: 6, Issue: 10, ISSN: 2278-909X, October 2017
4. D.Umakirthika, P.Pushparani and M.Valan Rajkumar, "Internet of Things in Vehicle Safety- Obstacle Detection and Alert System", IJECS, Vol. 07, No. 02, Pg no. 23540-23551, February 2018
5. Dr Thyagaraju G S, HMT Gadiyar, and U B Sujit, "IOT Based Smart and Safe Driving Application", IJRIER, Volume: 02, Issue: 02, ISSN: 2456-2084, February 2017
6. Yashpalsinh Gohil and Jay Desai, "Real-Time Tracking and Fuel Monitoring System for Vehicle", Vadodara Institute of Engineering, IJTSRD, ISSN No:2456-6470, Volume-2, Issue-4, June-2018
7. Ma Yuchun, Huang Yinghong (corresponding author), Zhang Kun, Li Zhuang, "General Application Research on GSM Module", 2011 International Conference on Internet Computing and Information Services, IEEE, November 2011
8. M.S. Braasch, A.J. van Dierendonck, "GPS receiver architectures and measurements", IEEE, ISSN:0018-9219, Volume:87, Issue:1, January 1999
9. Abha Damani, Hardik Shah, Krishna Shah, "Global Positioning System for Object Tracking", IJCA, ISSN: 0975-8887, Volume: 109, Issue: 8, January 2015

AUTHOR DETAILS

Dr Raju Anitha, received a Ph.D. degree in Image Processing and Pattern Recognition from Sri Padmavathi Mahila Visvavidhyalayam, Tirupathi. She is a Woman Scientist sponsor by DST from Govt. of India under the scheme of WOS-A. She is Assoc. Prof. Dept. of Computer Science and Engineering in Koneru Lakshmaiah Education Foundation. Her research interest is the Internet of Things, Image Processing and Machine Learning.

Savya Nidhi, currently pursuing B.Tech degree in Dept. of Computer Science& Engineering from Koneru Lakshmaiah Education Foundation. Her current research interests include internet of things and machine learning.

Devarapalli Sri Sai Praveen, currently pursuing B.Tech in Dept. of Computer Science and Engineering from Koneru Lakshmaiah Educational Foundation. His current research interests include Internet of Things.

M.V. Rama Krishna, currently pursuing B.Tech in Dept. of Computer Science and Engineering from Koneru Lakshmaiah Educational Foundation. His current research interests include the Internet of Things.

Published By:
Blue Eyes Intelligence Engineering
& Sciences Publication (BEIESP)