International Journal of Engineering and Advanced Technology (IJEAT)
ISSN: 2249-8958 (Online), Volume-8 Issue-4, April 2019

# Reduction of Cogging Torque of Surface Mounted Axial Flux Permanent Magnet Brushless DC Motor with Slot Shifting Technique

**Amit N. Patel, Bhavik N. Suthar**

***Abstract:*** ***Cogging torque of axial flux permanent magnet brushless dc motor is detrimental to performance hence it is vital to reduce it. Reduction of cogging torque of axial flux permanent magnet brushless dc (PMBLDC) motor is crucial issue during design. This article presents slot shifting technique to reduce cogging torque of low speed high torque axial flux PMBLDC motor designed for electric vehicle application. Reference axial flux PMBLDC motor of 250 W, 150 rpm is designed with 48 stator slots and 16 rotor poles without incorporating any slot shifting. Three dimensional finite element modeling and analysis is performed to obtain cogging torque profile of initially designed reference machine. Design modification is performed with shifting of stator slots. Stator slots on one side are shifted with respect to stator slots of other side in step of 2° and its influence on cogging torque is analyzed with 3-D finite element modeling and analysis. It is analyzed that cogging torque of axial flux PMBLDC motor is reduced. Slot shifting technique is effective technique to reduce cogging torque of axial flux PMBLDC motor.***

***Index Terms:*** ***Axial flux PMBLDC motor, cogging torque, finite element modeling & analysis.***

## I. INTRODUCTION

Green vehicles like electric bicycles are broadly used by city commuters due to their environment friendly features and economic merits. Permanent magnet (PM) motors have been increasingly used in high performance applications like electric vehicles. Since introduction of rare earth magnets fast development in the field of permanent magnet motors is witnessed [1]. Rare earth magnets offer superior capability to establish higher flux density than other ferrites, which results in to compact motor suitable for electric vehicle application. PM motors are of two types (i) radial flux motors and (ii) axial flux motors. Magnetic flux sets radially and current flows axially in radial flux motors. In axial flux motors magnetic flux sets axially and current flows radially [2]. The axial flux motors offer many benefits over a radial flux motors like better power density, better efficiency, better torque/current ratio and short axial length [3]. Axial flux motors can be classified according constructional aspects and type of back emf generated. Trapezoidal type back emf is generated in axial flux PMBLDC motors whereas sinusoidal type back emf is generated in axial flux PMSM motors. Designers have freedom to select variable numbers of stators & rotors and their relative placement. Torque quality assessment of axial flux permanent magnet motors is interesting task as torque ripple should also be given equal importance as torque density. Torque quality assessment and its improvement is current research interest of many researchers. Important sources of torque ripple are: (a) cogging torque (b) distorted stator current and counter emf waveforms (c) switching of phase excitation (d) fluctuation in delay time and dc link voltage of inverter. At high speed system momentum reduces torque ripple but at low speed torque ripple becomes noticeable creating unaccepted pulsations and noise [2]. Cogging torque is inherent in permanent magnet machines owing to interaction between air-gap permeance harmonics and PM rotor magneto motive harmonics. One can feel the effect of cogging torque even when stator is unexcited. Rotor demonstrates its tendency to align in more than one stable positions even without stator coil excitation. No excitation is involved in cogging torque generation. Field permeance harmonics are inherent in slotted stator construction. Cogging torque also affects self-starting feature of motor. This paper is concentrated on reduction of cogging torque as it is one of the significant design consideration of permanent magnet machines. Simulation and analysis has been carried out for cogging torque reduction of sandwiched stator double rotor axial flux PMBLDC motor. Magnet pole arc variation, skewing of stator slots and/or rotor magnets, shifting of magnets, shaping of magnet , stator tooth shaping, notching of stator tooth and/or rotor magnet, dual notched design, segmented stator, and etc. are various techniques to reduce cogging torque of radial flux PM machines available in existing literature [4]-[13]. Few of these techniques are applicable in axial flux PM Motors. The reduction in cogging torque of axial flux PMBLDC motor has been key objective of this paper. In this work, authors have addressed this issue with proposing a stator slot shifting technique. Three dimensional finite element analysis is performed as mathematical representation of design modifications to reduce cogging torque is complex. 3-D finite element analysis (FEA) technique is popularly applied in nonlinear problems like design and analysis of electrical machines. Basics of cogging torque and methods for its reduction are explained in section II. Design information of reference machine is described in section III. Section IV explicates slot shifting technique for cogging torque reduction. FE simulation & results are discussed in section V.

**Manuscript published on 30 April 2019.**
***** Correspondence Author (s)
**Amit N. Patel**, Elect. Engg. Department, Nirma University, Ahmedabad, India
**Bhavik N. Suthar**, Elect. Engg. Department, Government Engineering College, Bhuj, India

## II. COGGING TORQUE

Instantaneous electromagnetic torque developed by permanent magnet machines can be expressed with following equation considering negligible leakage and saturation of magnetic circuit.

$$T_e(t) = T_{avg} + \sum_{k=1}^{\infty} T_{6k} \cos(k6\omega t) + T_{cog} \quad (1)$$

where $T_{avg}$ is average torque output, $T_{6k}$ is harmonic torque components due to non-sinusoidal counter emf and exciting currents, $T_{cog}$ is cogging torque and k = 1,2,….

Cogging torque can be expressed with following Fourier series equation [14].

$$T_{cog}(\theta_m) = \sum_{k=1}^{\infty} T_k \sin(kN_c\theta_m + \varphi_k) \quad (2)$$

where $T_k$ and $\varphi_k$ are peak and phase of torque of $k^{th}$ harmonic component, $\theta_m$ rotor position, $N_c$ is LCM between no. of rotor poles (P) and slots ($N_s$).

Cogging torque is intrinsic characteristic of permanent magnet machines because of air-gap reluctance variation. As shown in equation 3, cogging torque depends on air-gap flux and reluctance variation. Cogging torque can be reduced by reducing either air-gap flux or reluctance variation. Reduction in air-gap flux results in to derating of motor hence it is not advisable. For cogging torque reduction air-gap reluctance variation has to be decreased [15].

$$T_{cog} = -\frac{1}{2}\phi_g^2 \frac{dR}{d\theta_m} \quad (3)$$

Where, $\phi_g$ as air-gap flux, $R$ as air-gap reluctance and $\theta$ as rotor angle.

This paper includes analysis of cogging torque reduction technique using 3-D finite element analysis. 3-D finite element modelling and analysis remain relatively time consuming. To simplify calculation, analytical technique may be combined with 3-D finite element analysis. Change of air gap energy stored with respect to rotor position is determined. Due to strong permanent magnets and strengthening of magnetic flux, the cogging torque is increased. Fundamentally cogging torque is generated due to non-uniform air gap flux distribution. Each rotor magnets have same position with regard to slots in integral slot machine where slots per pole is an integer. Therefore, cogging torque components produced by all magnets are in phase which results in to considerable cogging torque.

## III. REFERENCE AFPM MACHINE

Double rotor sandwiched stator axial flux BLDC motor of 250 W, 150 rpm is designed for two-wheeler application. The work carried out is based on reference machine of 48 stator slots and 16 poles as shown in Fig.1. Neo-dymium Iron Boron (NdFeB) grade 36 type permanent magnet material having remanence of 1.2 T used for rotor magnets. NdFeb has high coercivity and energy product.

y

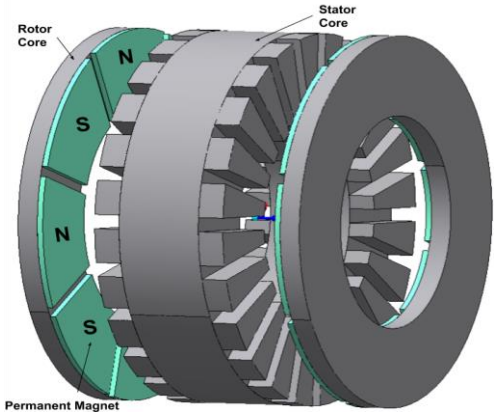


**Fig. 1. Model axial flux PMBLDC machine**

Important design variables like specific magnetic loading, specific slot loading, diametric ratio and space factor are required to be assumed properly considering application requirements. Ring wound slotted stator made of siliceous core material. Ring type winding has short overhang which subsequently results in to less copper loss. Rotor core is made of mild steel and permanent magnets are mounted on surface of core. This initially designed motor is considered as reference motor. Reference motor parameters are given in Table I.

**Table I. Design information of Axial Flux PMBLDC Motor**

| | |
|---|---|
| Outer radius | 45.5 mm |
| Inner radius | 26 mm |
| No. of phases | 3 |
| No. of poles | 8 |
| No. of slots/pole/phase | 1 |
| Stator slots | 48 |
| Diametric ratio | 1.73 |
| Length of PM | 2.7 mm |
| Length of air-gap | 0.5 mm |
| Stator back iron thickness | 35 mm |
| Rotor back iron thickness | 9.2 mm |
| PM | NdFeb |
| Core material | M19 |

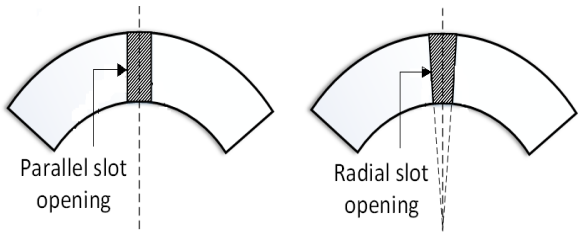


**Fig. 2. Slot openings of Axial Flux PM motor**

Parallel slot opening and radial slot opening are shown in Fig.2. Reference motor is designed considering parallel slot opening. Parallel slot opening construction is less complex compared to radial slot opening. Ratio of slot width to slot pitch does not remain constant while in radial slot ratio of slot opening to slot pitch remains constant [16].


Published By:
Blue Eyes Intelligence Engineering
& Sciences Publication (BEIESP)

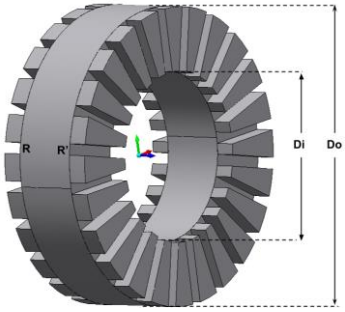


**Fig. 3. Initially designed stator of Axial Flux PM motor**

Initially designed stator consisting 48 parallel slots is shown in Fig 3.

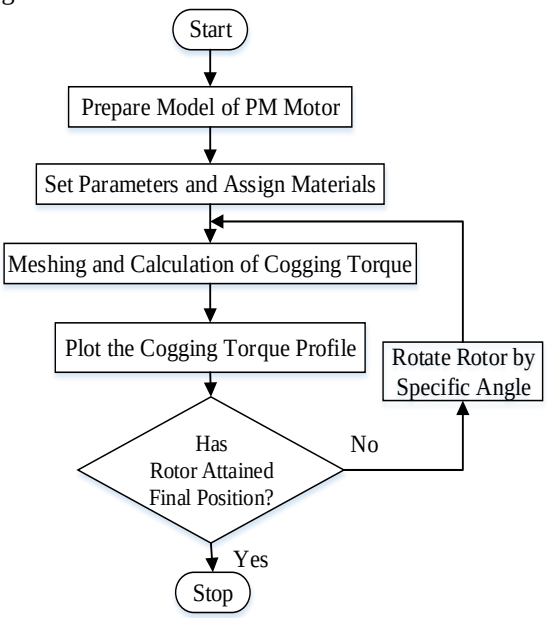


**Fig. 4. Flow chart of simulation process to obtain cogging torque profile**

Initially designed axial flux PM motor is considered as reference for comparison with improved designed motor with shifted stator slots. Modeling and simulation is carried out using finite element (FE) software for electromagnetic analysis. Model is prepared based on calculated dimensions and proper materials are assigned. Cogging torque is obtained with FEA at specific rotor position. This process is repeated for each incremental rotor position till final rotor position. Cogging torque profile is obtained based on recorded cogging torque for each incremental rotor position. Flow chart pertaining to simulation exercise to obtain cogging torque profile is shown in Fig. 4. This reference axial flux PM motor has cogging torque (peak) of 5.30 N.m. The waveform of cogging torque is illustrated in Fig. 5.

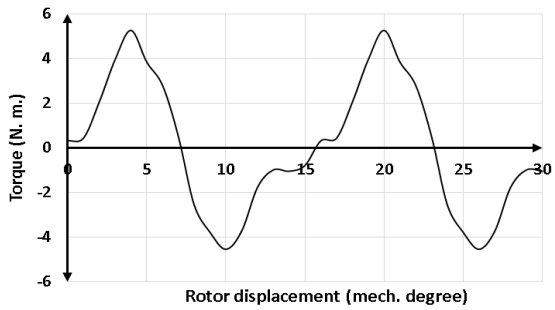


Fig. 5. Cogging torque profile of initially designed motor

## IV. SLOT SHIFTING TECHNIQUE

Different techniques are available in literature to reduce cogging torque of radial flux PMBLDC motors. This section explains slot shifting technique to reduce cogging torque of axial flux PMBLDC motor. Cogging torque is generated in slotted motor due to interaction between magnet flux and slot reluctance variation. Variation of air-gap reluctance has to be reduced to reduce cogging torque of axial flux PMBLDC motors. Shape and amplitude of cogging torque waveform depend on shape of slots and magnets. Cogging torque can be reduced with decreasing slot opening. Reduction in slot opening beyond certain extent complicates insertion of winding in stator slots. In proposed technique stator slots of one side are shifted relative to slots on other side as shown in Fig.6. Slot opening remains unaltered.

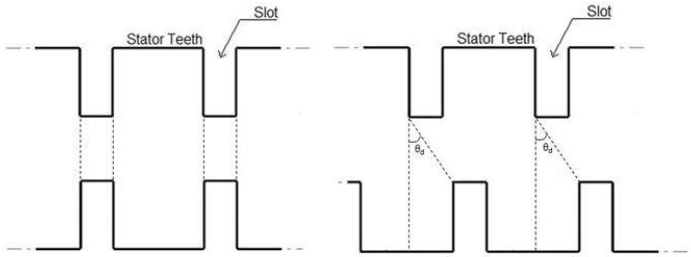


(a) (b)

**Fig. 6. (a) Initial design (b) Improved design with slot shifting**

Stator slots are shifted by 2°, 4° and 6° respectively. Modifies stator design with slot shifted by 6° is shown in Fig.7. All other design parameters are remained same except slot shifting.

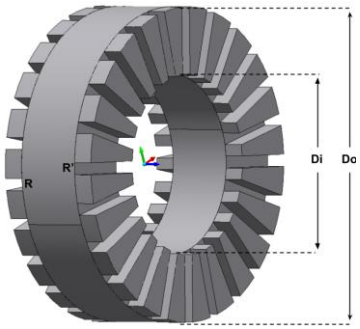


**Fig. 7 Stator model with shifted slots**

## V. RESULTS AND ANALYSIS

Three dimensional finite element analysis is required for axial flux motors due to its geometry. It gives accurate results with more computational time. The instantaneous torque is calculated from FE analysis based on the Maxwell stress tensor method. After modelling the motor according to analytical design outcome adequate mesh size, a magnetic field calculation was performed for different rotor displacements. Model discretization and selection of the integration line influence accuracy of results. Series of simulation exercises for different combinations are performed with 3-D finite element analysis to assess cogging torque and average torque. Cogging torque profile as shown in Fig. 8 is obtained for different slot opening.


Published By:
Blue Eyes Intelligence Engineering
& Sciences Publication (BEIESP)

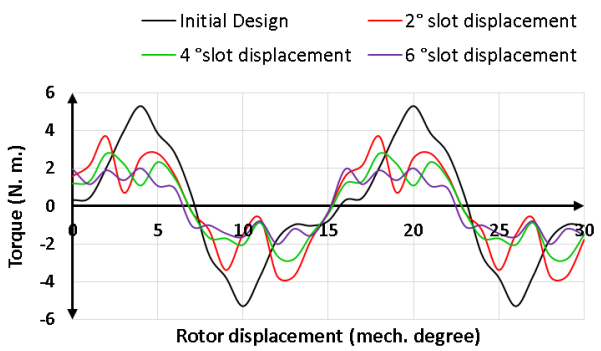


**Fig. 8. Cogging torque profile of improved design with slot shifting**

Table II shows effect of slot opening variation on peak cogging torque. Cogging torque (peak) is reduced from 5.30 N.m. to 2.05 N.m. with minimal reduction in torque rating.

**Table II. Effect of slot shifting on cogging torque**

| Sr. No. | Design Parameters | Cogging Torque (Peak) | Average Torque |
|---|---|---|---|
| 1 | Slot shift 0° | 5.30 N.m. | 15.80 N.m. |
| 2 | Slot shift 2° | 3.70 N.m. | 15.72 N.m. |
| 3 | Slot shift 4° | 2.79 N.m. | 15.24 N.m. |
| 4 | Slot shift 6° | 2.05 N.m. | 14.8 N.m. |

The flux density established in different sections of motor is an important variable in the design. Actual flux density determines iron loss and saturation level to which the machine is exposed. Assessment of actual flux density and its comparison with assumed flux density in respective section is important design issue. Fig. 9 shows flux density distribution in stator core of axial flux PMBLDC motor with shifted slot. It is analyzed that flux densities established in stator and rotor are in close proximity with assumed flux densities in respective section. Assumed flux densities are 1.8 T and 1.5 T in stator teeth and back iron respectively based on property of magnetic material and performance requirements. Close agreement between assumed and actual flux densities in various sections of motor authenticates correctness of proposed technique.

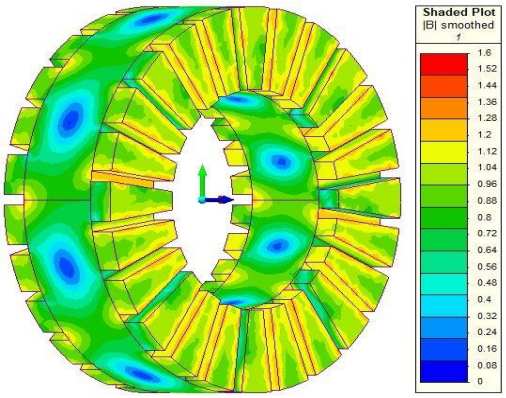


**Fig. 9. Field plot of motor with shifted stator slots**

## VI. CONCLUSION

Cogging torque degrades performance of axial flux PMBLDC motors particularly designed for low speed allocations like electric vehicle. Stator side design modification is performed in this research work to reduce cogging torque. Cogging torque profiles of initial design and improved design are obtained with 3-D finite element analysis. Slot shifting on stator side has been incorporated in improved design. Comparative analysis between initial design and improved design is carried out. It is observed that cogging torque (peak) of axial flux PMBLDC motor is reduced from 5.30 N.m to 2.05 N.m. i.e. 61.32 % with the application of slot shifting technique. Slot shifting technique is effective in reduction of cogging torque of surface mounted axial flux PMBLDC motors.

## REFERENCES

1. Ionuț Daniel Smărăndescu, Petre-Marian Nicolae, “About Electric Scooter Mobility. Aspects Regarding the Designing of a Brushless DC Motor for an Electric Scooter”, International Journal of Engineering and Advanced Technology, Vol.5, 2016, pp.9-13.
2. D.C Hanselman, Brushless Permanent Magnet Motor Design, New York: McGraw- Hill, 1994.
3. P.R. Upadhyay, K.R. Rajagopal and B.P. Singh, “Computer Aided Design of An Axial-Field Permanent Magnet Brushless DC Motor for Electrical Vehicle”, Journal of Applied Physics, Vol. 93, 2010, pp. 8689-8693.
4. T. Liu, S. Huang, J. Gao and K. Lu, "Cogging Torque Reduction by Slot-Opening Shift for Permanent Magnet Machines,” IEEE Transactions on Magnetics, Vol. 49, No. 7, 2013, pp. 4028-4031.
5. M. Chabchoub, I. Ben Salah, G. Krebs, R. Neji and C. Marchand, "PMSM Cogging Torque Reduction: Comparison Between Different Shapes of Magnet," International Conference on Renewable Energies and Vehicular Technology, Hammamet, 2012, pp. 206-211.
6. Jong Gun Lee, Yu Ki Lee and Gwan Soo Park, "Effects of V-Skew on the Cogging Torque in Permanent Magnet Synchronous Motor," International Conference on Electrical Machines and Systems, 2013, pp. 122-124.
7. B. Boukais and H. Zeroug, "Magnet Segmentation for Commutation Torque Ripple Reduction in a Brushless DC Motor Drive," IEEE Transactions on Magnetics, vol. 46, No. 11, 2010,pp. 3909-3919.
8. W.Zhao, T. A. Lipo and B. Kwon, "Material-Efficient Permanent-Magnet Shape for Torque Pulsation Minimization in SPM Motors for Automotive Applications," IEEE Transactions on Industrial Electronics, 2014, Vol. 61, No. 10, pp. 5779-5787.
9. R. Islam, I. Husain, A. Fardoun and K. McLaughlin, "Permanent Magnet Synchronous Motor Magnet Designs with Skewing for Torque Ripple and Cogging Torque Reduction," IEEE Industry Applications Annual Meeting,2007, pp. 1552-1559.
10. Bin Zhang, Xiuhe Wang, Ran Zhang and Xiaolei Mou, "Cogging Torque Reduction by Combining Teeth Notching and Rotor Magnets Skewing in PM BLDC with Concentrated Windings," International Conference on Electrical Machines and Systems, 2008, pp. 3189-3192.
11. Z.Q.Zhu, Z.Azar and G.Ombach, Influence of additional Air Gaps between stator Segments on Cogging Torque of Permanent Magnet Machines Having Modular Stators”, IEEE Transactions on Magnetics, Vol.48, No. 6,2012, pp 2049-2055.
12. Kyung-Sik Seo, Yong-Jae Kim, Sang-Yong Jung, “Stator Teeth Shape Design for Torque Ripple Reduction in Surface-Mounted Permanent Magnet Synchronous Motor”, International Conference on Electrical Machines and Systems, 2014,387-390
13. Ilya Petrov, Pavel Ponomarev, Yulia Alexandrova, and Juha Pyrhönen, “Unequal Teeth Widths for Torque Ripple Reduction in Permanent Magnet Synchronous Machines With Fractional-Slot Non-Overlapping Windings”, IEEE Transactions on Magnetics, Vol.51, No. 2, 2015, pp 1-9.


Published By:
Blue Eyes Intelligence Engineering
& Sciences Publication (BEIESP)

14. Luke Dosiek, Pragasen Pillay, "Cogging Torque Reduction in Permanent Magnet Machines", IEEE Transactions on Industry Applications, Vol.43, No. 6, 2007, pp 1565-1571.
15. Metin Aydin, Mehmet Guklec, "Reduction of Cogging Torque in Double – Rotor Axial Flux Permanent Magnet Disc Motors: A review of Cost effective Magnet Skewing Techniques with Experimental Verifications", IEEE Transaction on Industrial Electronics, Vol.61, No.9, 2014, pp.5025-5034.
16. M.Aydin, Z.Q.Zhu, T.A.Lipo, D.Howe, "Minimization of Cogging Torque in Axial Flux Permanent Magnet Machines: Design Concepts" IEEE Transactions on Magnetics, Vol.43, No. 9, 2007, pp 3614-3622.

## AUTHORS PROFILE

**Amit N. Patel** obtained degrees of B.E. and M. E. in Elect. Engg. in 1999 and 2004 respectively from Gujarat University, India. Currently he is Assistant Professor at Nirma University. He has authored several papers in l journals & conferences. His research area includes design of conventional and advanced electrical machines.

**Bhavik N. Suthar** obtained Master's in Elect. Engg. from SGSITS Indore in 2002. He obtained doctoral degree from Indian Institute of Technology, Delhi. Currently he is professor at Govt. Engg. College Bhuj. He has published several papers in international journals & conferences. His research area includes AI applications to power system & electrical machine design.


Published By:
Blue Eyes Intelligence Engineering
& Sciences Publication (BEIESP)