International Journal of Engineering and Advanced Technology (IJEAT)
ISSN: 2249-8958 (Online), Volume-8 Issue-4, April 2019

Performance Evaluation of Free Space Optics Using Different Modulation Techniques at Various Link Ranges

A. Sree Madhuri, Govardhani Immadi, V.Mounika, A.TarunTeja, T.Aakash, N.Sai Srinivasa

Abstract -This technology utilizes the light propagating in the free space to transmit the data wirelessly for both telecommunications and computer networking domains. In optical communication, we use optical fibre cable as a medium but in the free space optical communication, we use the free space as the medium to propagate the light signal. Here free space means air, vacuum, or outer space. Free Space Optics is a line of sight communication. In this paper the proposed FSO link with foot prints of 500 meters, 1500 meters and 2000 meters, a CW laser of 10db and at wavelength of 1550 nm is constructed under frail disturbance like climatic initiated attenuation ,scattering conditions connection execution is assessed through different modulation techniques, to be specific ASK, PSK, FSK, MZ, EA, Dual Drive MZ.

IndexTerms:Scattering,Attenuation,Freespace,Telecommunication,optical communication.

I. INTRODUCTION

In this era of digital communication employment of many communication technologies is taking place to solve the real world problems. Few of the technologies like RF and Optical Fibre communications which are answering the real world queries like high speed internet, higher bandwidth and long distance communication are still un-answering the queries like economical feasibility and last mile communication. There are more number of technologies in optical communication, in that free space optical technology or communication uses the light, which is propagated through the free space. This makes, there is no connection between transmitter and receiver. By this, it is very much useful in telecommunication networks. [5] so, this technology differ strikingly between wired connections like optical fibre cable or transmission lines. This type of telecommunication is very much used where the connection is impractical due to the reasons of high expensive of the wired connections and other factors.

Manuscript published on 30 April 2019.
***** Correspondence Author (s)
A. Sree Madhuri*, Department of ECE,KLEF, Vaddeswaram, Guntur, AP,India-522502
Govardhani Immadi, Department of ECE,KLEF, Vaddeswaram, Guntur, AP,India-522502
V.Mounika, Department of ECE,KLEF, Vaddeswaram, Guntur, AP,India-522502
A.TarunTeja, Department of ECE,KLEF, Vaddeswaram, Guntur, AP,India-522502
T.Aakash, Department of ECE,KLEF, Vaddeswaram, Guntur, AP,India-522502
N.Sai Srinivasa, Department of ECE,KLEF, Vaddeswaram, Guntur, AP,India-522502

Free Space Optics(FSO) which is fibre free, is nothing but a technology that propagates modulated light pulses via free space(like air, vacuum) to achieve broadband communication. The sources utilized are either Light emitting diodes(LED) or LASERS. It provides levels of bandwidth comparable to fibre optic cable. [2]This assures high connectivity and also dispersion-free dynamic optical paths, which isa parameter that is lacking in fibre optic communication systems. FSO is compared with other wireless communication technologies in Table 1.1.

Table 1 shows the Comparison with FSO with other Access Technologies

Features	FSO	Fiber	DSL
Deployment time	Days to weeks	4-12 months	6-12 months
Provisioning time	Immediate	Complex	Complex
Initial investment for few subscribers	Low	High	High
Reliability	Medium	High	High
Topology/flexibility	PP, PM, Mesh	PP, PM, Mesh	PP
Distance Limitation	200 – 2000 m	200 km	5.5 km
Bandwidth/speed	1.25 Gbps	10 Gbps	2 Mbps

In long established free space optic technologies, generally uses only one light source will be used and that will be used at transmitter to transmit the information to the receiver. [1]This kind of systems has data rate moderately like 1 GB/s.In this FSO technology, the transmitter and receiver will be mounted on higher places like building top roofs.

[4]In this FSO ,the link can be established in full duplex mode and the transmitter contains the Light emitting diode or a laser diode with that at the receiving side there must be optical detector to establish the link.

The FSO technology has so many advantages are there like compared with the fibre optical communication, the system cost will be very low and the here the transmission will be done by optical beam. The equipment is available in market form vendors. The installation process is very much easy it will take less than an hour and the upgradation of equipment is easy with low cost.Due to its lone of sight operation ,we can use for long range communication. There is no need to purchase cables and license for the communication like Radio communication. The security of system is high due to its narrow beam and high directivity. This FSO system is effect free from electromagnetic interference. Likewise this FSO has low transmission bit errors or Bit error rate ,the communication between transmitter and receiver will donesame time and it will be done wirelessly in free space LOS operation.

Published By:
Blue Eyes Intelligence Engineering
& Sciences Publication (BEIESP)

II. DIGITAL MODULATION SCHEMES

Analog Modulation is less immune to noise. Therefore, we are making use and advancements in Digital Modulation.

A. Amplitude Shift Keying: In amplitude shift keying the message signal is digital in nature and the carrier signal is continuous sinusoidal in nature.In this the characteristics of the carrier is varied according to the base band or message signal.

B. Frequency Shift Keying: In frequency shift keying the message signal is digital in nature and the carrier signal is analogin nature. Carrier signal is high frequency sinusoidal signal. The frequency of the carrier signal is changed with respect to that of the message signal.

C. Phase Shift Keying: In PSK the message signal is digital and the carrier signal is continuous like sinusoidal signal.The phase of the carrier signal is changed with respect to that of the message signal.

D. MZ Modulation: It is used for regulating the amplitude of the optical wave. In this the input wave guide is split into interferometer arms. If we apply or feed voltage across one of the arms then a phase shift is introduced in the wave that is transmitting in that arm. Again when the are combined the difference between the phase is converted to amplitude modulation.

E. EA Modulator: An electro-retention modulator (EAM) is a semiconductor gadget which can be utilized for adjusting the force of a laser bar through an electric voltage. Its rule of activity depends on the Franz-Keldysh impact, i.e., an adjustment in the ingestion range brought about by a connected electric field, which changes the band hole vitality (along these lines the photon vitality of a retention edge) yet as a rule does not include the excitation of transporters by the electric field.

III.FREE SPACE OPTICS

Here it is the block diagram of the Free space optic system shown in fig 4.1.wich is used to study the various modulation techniques to evaluate the performance of the link range.

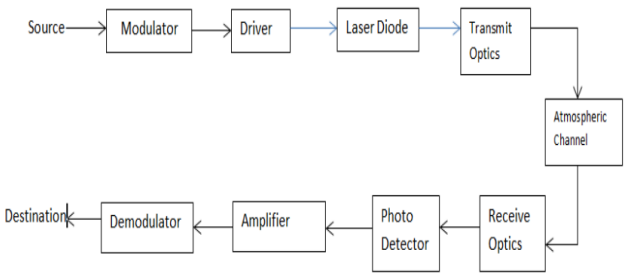

Figure 1 shows the block Diagram of FSO System

[7]We simulated circuits in Optisystem 14 software. In FSO system the necessary information signals are generated, which is to be transmitted over free space by a laser diode or a Light emitting diode and the optical detector is nothing but a receiver has to receive the generated information signal. Here the generated signal modulation scheme will depends on modulator. In many FSO systems Laser is preferable due to its high coherence, directivity.in the transmitter section of the FSO, the electrical signal will be converted in to optical signal, and it will be transmitted over free space and finally reaches to the receiver with lots of atmospheric obstacles. At the receiver side , the optical signal is converted into electrical signal which is done by the photo detector.

The received signal is very weak signal.so that it will be amplified for the next procedureAt the transmitter and receiver modulation and demodulation of the signal in electrical form. The demodulated signal produced in the desired form to the destination. Here some of the important System Components are given below.

A. FSO Channel: It is a subsystem of two telescopes and the free space station between them. It is most proper for the showing of perceptible pathway free space natural connections.FSO will turn out to be most secure and fast mode of information transmission while interface Range and lessening parameters are considered in the FSO channel

B. CW Laser: Makes a constant wave (CW) optical flag. In the CW case, the ordinary Power is a parameter that you decide. The laser stage noise is shown using the parameters like likelihood thickness work.

C. APD: The APD Component is used to change over an optical flag into an electrical stream reliant on the gadget Responsivity. The amount of the optical flag of a channel is decrease by electrical flag channels and commotion channels. If optical signs are perceived at the commitment to the APD Component, the bit that falls inside the altered flag transmission limit will be changed over to white (Gaussian) noise .The commotion exhibit three-disturbance check, Analytical, Numerical.

D. Low Pass Bessel Filter: The Bessel channel is on a very basic level equivalent to the Gaussian channel, and tends towards indistinct shape from channel organize increments. While the time-space step response of the Gaussian channel has zero overshoot the Bessel channel has a little proportion of overshoot, yet in the meantime considerably not exactly essential recurrence territory channels.

Diverged from restricted solicitation approximations of the Gaussian channel, the Bessel channel has better moulding element, compliment stage delay, and compliment bunch delay than a Gaussian of a comparative solicitation, anyway the Gaussian has cut down time deferral and zero overshoot. Basic typical for a Bessel channel is its maximally level get-together postponement, and not the adequacy response, it isn't right to use the bilinear change to change over the simple Bessel channel into an electronic shape.[8] Contrasted with constrained solicitation approximations of the Gaussian channel, the Bessel channel has better moulding variable, compliment stage delay, and compliment bunch delay than a Gaussian of a comparative solicitation, anyway the Gaussian has cut down time deferral and zero overshoot. Basic typical for a Bessel channel is its maximally level social event delay, and not the adequacy response, it isn't right to use the bilinear change to change over the simple Bessel channel into an electronic shape.

Published By:
Blue Eyes Intelligence Engineering
& Sciences Publication (BEIESP)

E. BER:[3]BER is the parameter for estimating the nature of transmission. Because of impact of parameters, for example, clamour, scattering and non-straight impacts, the floods of the optical signs coupled will be corrupted or twisted at the terminals of the optic fibre joins. These bit blunders are available when the beneficiary transduces the optical signs into electrical signs. Bit blunder rate,In computerized transmission, the amount of bit mistakes is the amount of gotten bits of a data stream over a correspondence channel that have been changed due to commotion, obstruction, mutilation or bit synchronization mistakes.

IV.RESULTS AND DISCUSSION

The simulation study is carried out using simulation package.

(i)Amplitude Shift Keying:

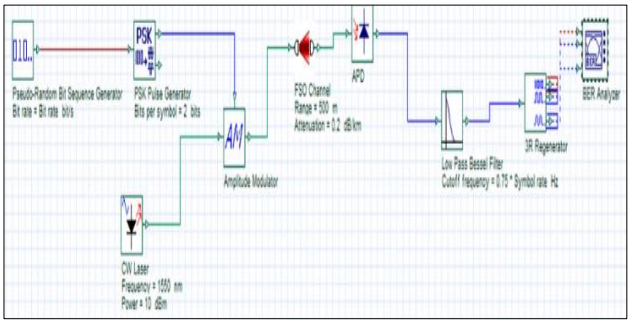

Fig2 FSO system using ASK modulation Scheme

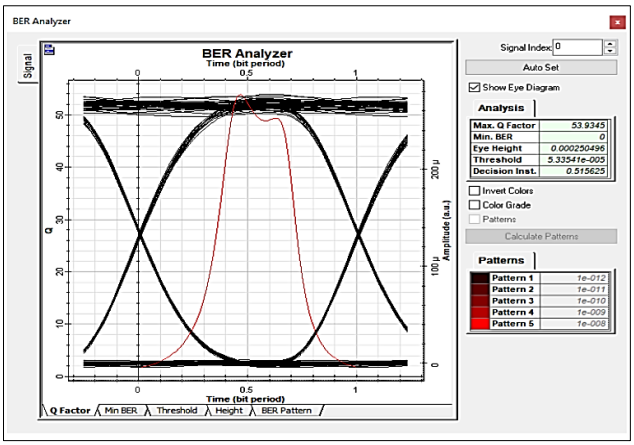

Fig 2 Link Range is 500m, attenuation is 0.7 dB/km

(ii)EA Modulation:

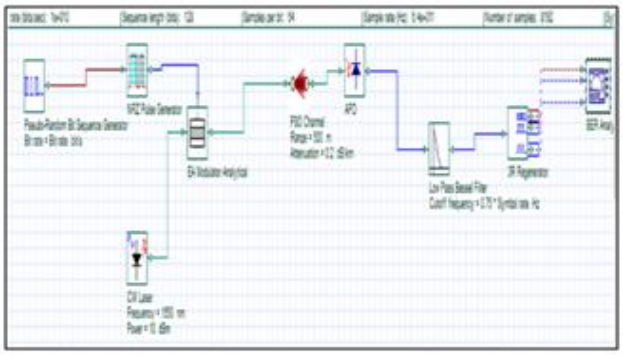

Fig3 FSO system using EA modulation Scheme

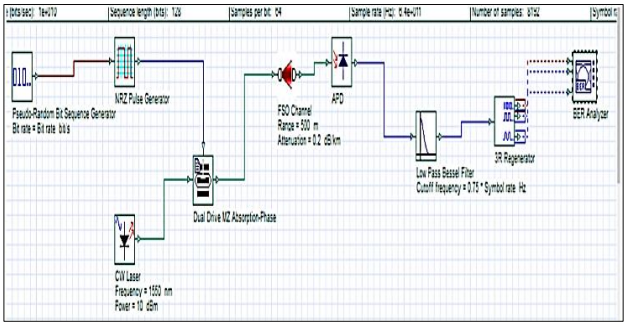

Fig 4 Link Range is 500m ,attenuation is 0.2 dB/km

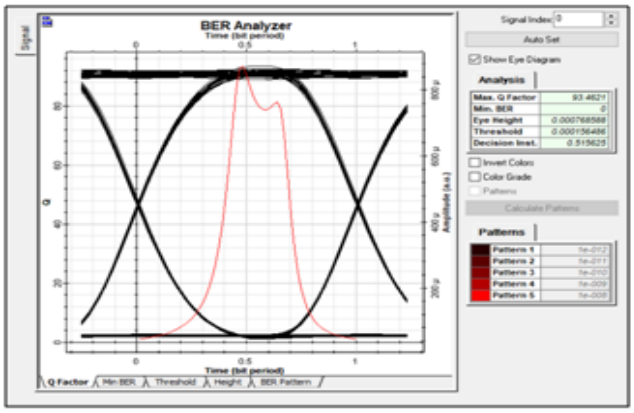

Fig 5 FSO system using MZ modulation Scheme

(iii) MZ Modulation

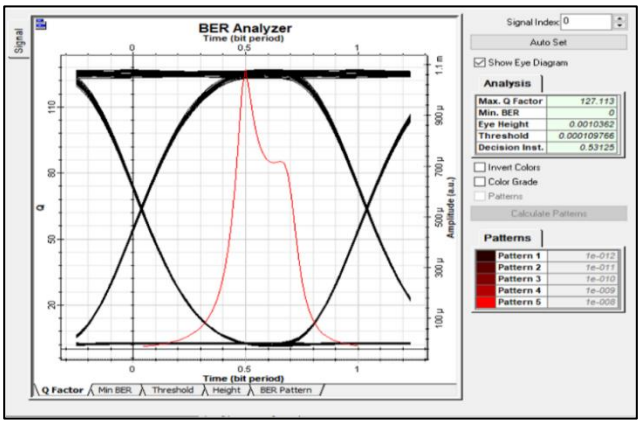

Fig 6 Link Range is 500m ,attenuation is 0.2 dB/km

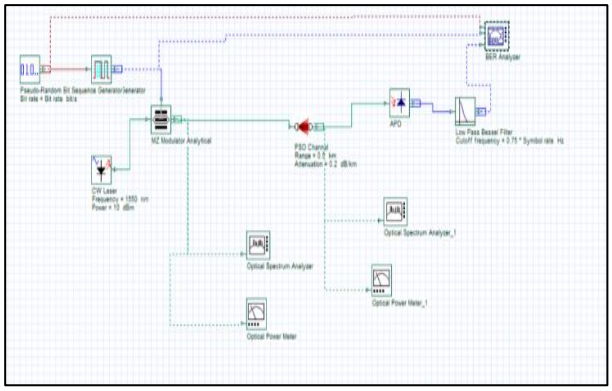

Fig 7 FSO system using ASK modulation Scheme

Published By:
Blue Eyes Intelligence Engineering
& Sciences Publication (BEIESP)

(iv)Dual Drive MZ Absorption Phase

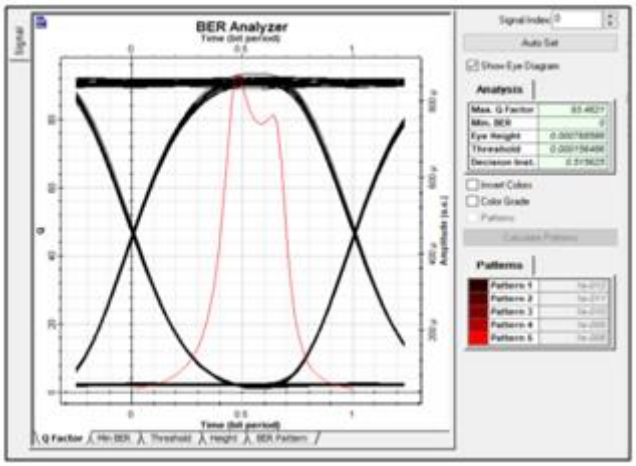

Fig 8 Link Range is 0.5km, attenuation is 0.2 dB/km

As the connection range and weakening quality builds the contortion in eye chart increments. The execution of MZ,EA and ASK is great since the eye charts created are with less twisting and this demonstrates the FSO interface is great to utilize basically. As the connection run builds the quality factor diminishes and the BER increments. The FSK and PSK execution is poor.

Table 2 Comparison of Different Modulation Schemes

Modulation Type	Frequency (nm)	Power (dBm)	Link Range (m)	Attenuation (dB/km)	Quality Factor	BER
ASK	1550	10	500	0.2	53.94	0
			1500	0.7	9.444	1.77*10^-21
			2000	0.9	4.897	4.735*10^-7
EA	1550	10	500	0.2	109.19	0
			1500	0.7	24.51	4.8*10^-133
			200	0.9	14.12	1.2*10^-45
MZ	1550	10	500	0.2	127.11	0
			1500	0.7	27.810	1.52*10^-17
			2000	0.9	15.958	1.19*10^-57
MZ DUAL DRIVE	1550	10	500	0.2	93.46	0
			1500	0.7	21.58	1.2*10^-103
			2000	0.9	12.10	4.70*10^-34
PSK	1550	10	500	0.2	0	1
			1500	0.7	0	1
			2000	0.9	0	1
FSK	1550	10	500	0.2	0	1
			1500	0.7	0	1
			2000	0.9	0	1

The outlined FSO the enlightening is wide in MZ ,EA, ASK and different modulators is given in the table. So we have great outcomes and execution in Q. factor and BER for the Link Range of 500m and Attenuation at 0.2db/km, for example, for ASK we have BER "0" and Q. factor 53.94 &MZ we have BER "0" and Q .factor 127.113 and EA we have BER "0" and Q. factor 109.194 &.Since we don't have better enlightening in FM and PM for a similar connection Range and Attenuation where with respect to FSK and PSK Q. factor is "0" and BER is 1.By this outcomes we can say that FSO association can achieve a superior association execution with most extraordinary quality factor in MZ. Table 5.1 shows the comparison with different modulation schemes with change of link ranges.

The AM and EA modulators even though they have a better eye openings they have a slight BER. But in FM and PM the results are not satisfactory. So the more number of waves passes through MZ.

V.CONCLUSION & FUTURE SCOPE

FSO offers various focal points over existing techniques which can be either optical or radio or microwave. Less cost and time to setup are the guideline interest of FSO system. Optical rigging can be used in FSO structure with some alteration. Advantages of FSO correspondence structure and its application locale make it a hot development yet there are a couple of issues rising in view of the lessening brought about by medium. FSO structure speaks to some issue like weakening in medium that can impact the execution of transmission as influence incident would be there. However, extra thought and pre-study of the medium can guide what kind of parameters to be considered before setting up the system.Different models reliant on these examinations are used to contemplate the structure execution before presenting it at the region. This can provoke the upgrade of the structure. Free Space Optics is an infrared innovation which is exceptionally secure and more dependable than the wired innovation. The components which had driven the upgrade of free space optics are no compelling reason to pay sum for the permit since FSO utilizes unlicensed range, fibre laying costs are spared and mostly prepared specialists are sufficient. In not so distant future this innovation will be executed in bank ATM's, fax machines, amusement comforts and so forth. The investigation of execution of ASK,PSK, FSK ,MZ, EA, Dual Drive EA lets us know explicitly that MZ , EA and ASK adjustment methods can be utilized for nearby correspondence with the capability of high frequencies keeping up the Line of Sight.

REFERENCES

1. Thomas Plank, Erich leitbeg, Markus Loeschnigg, "Recent Developments on Free Space Optical Links and WavelengthAnalysis", International conference on Space Optics andapplications, 2011.
2. S. Rajbhandari, Z.Ghassemlooy, J. Perez, H. Le Minh, M.Ijaz, E. Leitgeb, G. Kandus and V. Kvicera, " On The Study ofthe FSO Link Performance under Controlled Turbulence and FogAtmospheric Conditions ",International conference onTelecommunications, 2011.
3. Govardhani.Immadi, Kotamraju, S.K. Venkata Narayana, M.,Khan, H., Sree Madhuri, A., Sravya Chowdary, K., Vineela, P, "Measurement of tropospheric scintillation using KU band satellite beacon data in tropical region", ARPN Journal of Engineering andApplied Sciences Open Access Volume 10, Issue 4, 2015, Pages 1568-1572.
4. VladimírTejkal, Miloslav Filka1, Jan Šporik, Pavel Reichert,"Possibilities of Increasing Power Budget In Optical Networks"Vol. 1, No. 4, December 2010.
5. Govardhani, I., Kotamraju, S.K., Khan, H.,Venkata Narayana, M., Hemavasavi, K.,Naga Sai, K.P., Sirisha, N., Estimation of Ku band satellite signal propagation impairment due to rain in tropical environment using ITU-R, International Journal of Applied Engineering Research, Volume 9, Issue 20, 2014, Pages 7149-7168.

Published By:
Blue Eyes Intelligence Engineering
& Sciences Publication (BEIESP)

6. 6.Ales Prokes, VladislavSkorpil,"Estimation of Free SpaceOptics Systems Availability Based on Meteorological Visibility"IEEE 2009.
7. .Govardhani Immadi, M.Venkata Narayana, Sarat K Kotamraju, A.Sree Madhuri" Estimating the performance of Free Space Optical Link Under Adverse Weather Condition by using various models ",Wireless Personal Communications" Volume 103, Issue 2, 2018, 1603-1613.
8. A.Sree Madhuri, Govardhani.Immadi, Venkata Narayana M, "Estimation of cumulative distribution of scintillation effect on Ku band frequencies for one of the tropical regions using various models" ,Journal of Engineering Science and Technology Review,2018,Vol 11,Issue 1, 1791-9320,151-155.

AUTHORS PROFILE

A.Sree Madhuri, is working as Assistant Professor at K L University .Received B.Tech in Electronics and Communication engineering from K L University Vaddeswaram in 2015. Persued her M.Tech with specialization in Digital Electronics and Communication Engineering from JNTUA College of Engineering Pulivendula.

Govardhani. Immadi, Professor in K L University. Completed B.Tech in KLCE affiliated to Acharya Nagarjuna University in 2004. Received Master's degree from the Acharya Nagarjuna University as a University topper in 2009.Recieved Ph.D in the year 2015 from K L University.Major area of working is Propagation Studies, Free Space Optics, Microwave Engineering.

Published By:
Blue Eyes Intelligence Engineering
& Sciences Publication (BEIESP)