International Journal of Engineering and Advanced Technology (IJEAT)
ISSN: 2249-8958 (Online), Volume-8 Issue-3S, February 2019

Performance Measures of Bridgeless Sepic Converter and Boost Converter

T. V. Narmadha, V. Krithika, K. Sivakumar

Abstract: ***Bridgeless single-ended number one inductor converter (SEPIC) suffers from immoderate conduction loss at the enter bridge diode. The ones AC-DC converters incorporate some of non-linear devices which reduce the system power hassle and introduce harmonics in the strength device essential to adverse results. Consequently, it's far crucial to apply a suitable strength problem correction approach to scenario the deliver cutting-edge-day. The Bridgeless Sepic Converter (SC) is proposed as a way to the troubles addressed it truely is provided in this paper. In evaluation to the traditional beautify percentage converter, this Bridgeless SC topology is extra effective. This paper specializes within the bridgeless improve, Sepic, primarily based certainly AC-DC converters. A evaluation of these topologies are furnished in phrases of THD (elegant harmonic distortion) inside the supply current-day, supply strength trouble and supply distortion element, regular performance. Simulations of the severa AC-DC circuit configurations are done in MATLAB/SIMULINK.***

Key terms- SC-SepicConverter,AC-Alternatingcurrent, DC-direct present day-day,THD-massive harmonic distortion,percentage-power element correction.

I. INTRODUCTION

In cutting-edge strength super troubles is the fundamental problem in our packages. To do away with the trouble various topology had been proposed[1]. Typically in a AC-DC converter due to the switching device excessive voltage get dressed and additionally there may be a presence of commonplace mode noise due to interference. To conquer this trouble, Bridgeless AC-DC converter is used inside the software software software [2].This percent allows the minimal permit of contemporary allow to go along with the flow thru the switching tool. However in Bridgeless increase converter have the downside that the DC output voltage is higher than the peak enter voltage. Due to this the Bridgeless SEPIC converter is extra inexperienced than the conventional circuit.in this converter diploma the THD, beautify the electricity detail,decreasing the harmonic distortion,ripple cutting-edge-day and avoid interference inside the circuit[5]

Manuscript published on 28 February 2019.
***** Correspondence Author (s)
Dr. T.V.Narmadha, M.E, Ph.D., Professor Department of EEE St.Joseph's College of Engineering, Chennai-119, India.
V.krithika, ME (Power Electronics and drives) St.Joseph's College of Engineering, Chennai-119, India.
K.sivakumar, Assistant professor(EEE) St.Joseph's College of Engineering, Chennai-119, India

© The Authors. Published by Blue Eyes Intelligence Engineering and Sciences Publication (BEIESP). This is an open access article under the CC-BY-NC-ND license https://creativecommons.org/licenses/by-nc-nd/4.0/

II. BRIDGELESS SEPIC CONVERTER

To overcome those limitations in bridgeless decorate converter, the bridgeless single-ended number one-inductor converter (SEPIC) is carried out. A bridgeless SEPIC is essentially a lift converter observed via a dollar-growth converter, consequently it is just like a conventional dollar-

decorate converter, but has benefits of getting non-inverted output the use of a chain capacitor to couple strength from the enter to the output (and consequently can reply extra gracefully to a quick-circuit output), and being capable of proper shutdown: at the equal time as Figure1 switch is have become off, its output drops to 0 V, following a fairly hefty quick promote off of charge.

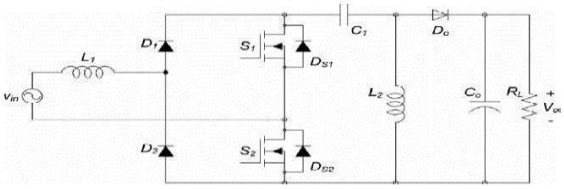

Figure 1: Bridgeless SEPIC converter

III. DESIGN SPECIFICATION

Table1 Design specification for converter

S.no	Specification name	Rating
1	Main voltage range(V_{in})	230V,AC
2	Line frequency(f_L)	50Hz
3	Output voltage(V_O)	460V
4	Output power rating(P_O)	20W
5	Switching frequency(f_s)	20kHz

Table1 Design specification for a bridgeless SEPICconverter **Equation for SEPIC Converter**

$$Vc = \frac{Vin}{1-\delta} \quad (1)$$

The capacitor Co must be large enough to minimize the voltage ripple,

$$Co = \frac{Po}{4f_L V_0 \Delta V_0} \quad (2)$$

By using duty ratio δ

$$Vout = \frac{\delta}{1-\delta} Vin \quad (3)$$

Published By:
Blue Eyes Intelligence Engineering and Sciences Publication (BEIESP)
© Copyright: All rights reserved.

IV. SIMULATION & RESULTS OF BRIDGELEESS SEPIC CONVERTER & RESULTS

The Powergui block that opens a graphical user interface for the electrical circuits.The simulation circuit diagram is shown in Figure2.

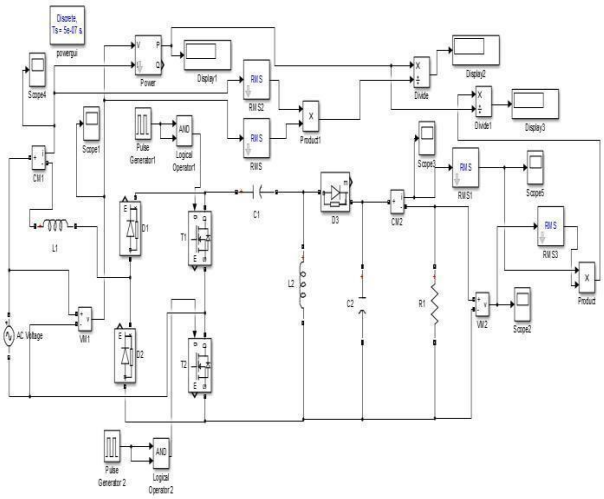

Figure 2 : Simulink model of bridgeless sepic converter

Because of this the conduction losses are extensively reduced at the same time as in assessment to standard percentage circuits. The circuit operation of the converter is said in detail and closed loop simulation of the circuit is completed. From the simulation consequences, it's far easy that the input voltage and enter reducing-edgemodern are nearly in section and the strength trouble is immoderate.For the equal enter voltage of 230V,the bridgeless converter produces the output of 480V and furthermore the ripple is decreased.

V.INPUT WAVEFORM AND OUTPUT WAVEFORM

A. INPUT VOLTAGE AND CURRENT WAVEFORM

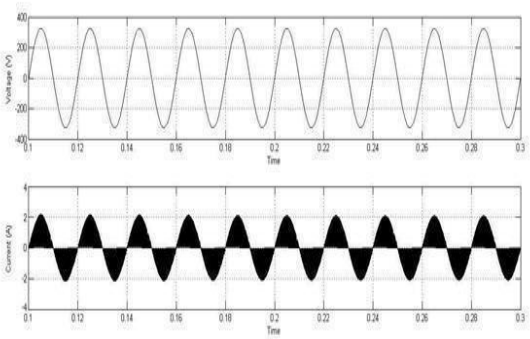

Figure 3: Input voltage and current of Bridgeless SEPIC converter

The converter topology end up simulated inside the MATLAB/ SIMULINK software program program for validation of topology. Decide three shows the input voltage and enter waveform.

B. OUTPUT VOLTAGE AND CURRENT WAVEFORM

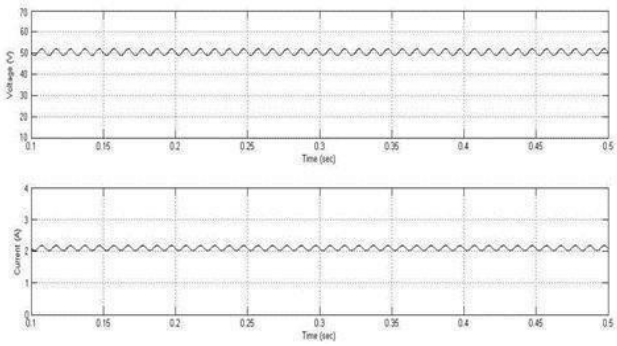

Figure 4:output voltage and current of bridgeless SEPIC converter

The converter topology have turn out to be simulated in the MATLAB/ SIMULINK software program utility software program utility for validation of topology. Decide 4 shows the input voltage and input modern-day-day waveform.

A bridgeless SEPIC strength element Correction circuit has been provided in which the input diode bridge rectifier is removed and thereby the form of task additives is decreased. In the end of each half of cycle a maximum of eight additives conduct. As a stop save you prevent surrender stop cease result the conduction losses are significantly reduced at the identical time as in assessment to conventional % circuits. From the simulation effects, it is easy that the input voltage and enter contemporary-day-day are almost in section and the power detail is excessive.

VI. HARMONIC SPECTRUM

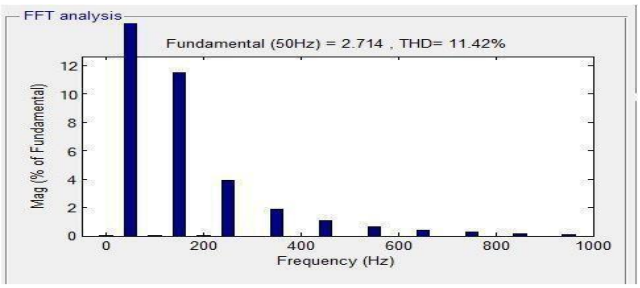

Figure 5:Harmonic Spectrum for Bridgeless SEPIC converter

In Figure 5 harmonic spectrum for bridgeless Sepic converter the THD is 11.4 and the FFT value is 2.714Hz. This circuit would be most suitable to be used as a switch mode power supply application for low power equipments, especially those requiring high quality input power.

Published By:
Blue Eyes Intelligence Engineering
and Sciences Publication (BEIESP)
© Copyright: All rights reserved.

VII. TOTAL HARMONIC DISTORTION

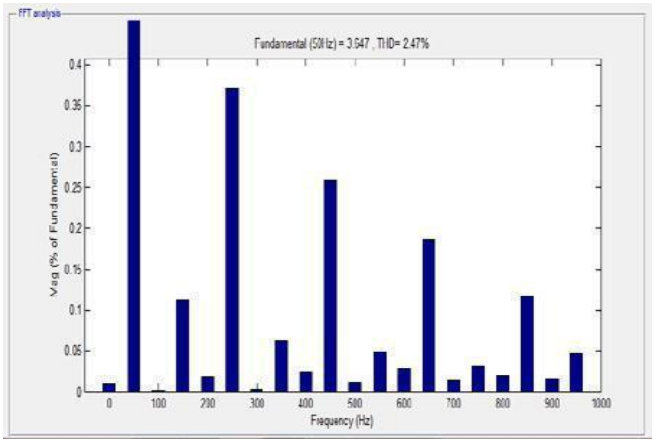

Figure 6: THD result of Bridgeless SEPIC converter

The THD result in the Figure 6 shows that the Bridgeless SEPIC converter have higher efficiency and reduced voltage stress .

Table 2. THD and Power Factor at different loads for bridgeless SEPIC conveter

LOAD	THD(%)	POWER FACTOR
100w	11.42	0.9934
75w	11.76	0.9931
50w	12.31	0.9925
25w	14.20	0.990

In desk 2 the strength wonderful statement at hundreds are showed. From the assessment it's far decided that the THD will growth with the decrease in load. Moreover the power element decreases barely with the decrease in load.

A prototype version of the Bridgeless SEPIC converter is designed and fabricated on a dot board. The manipulate circuit for the converter is also designed. The input to the electricity circuit is 230V 50 Hz AC. The circuit come to be designed for 100W load.

VIII. BRIDGELESS BOOM CONVERTER

Bridgeless rectifier consists of switches S1 and S2 for controlling the output voltage. On the same time as in evaluation to the traditional topology, it makes use of more inductors and capacitor to build up the thermal commonplace everyday cutting-edge everyday regular regular not unusual common wellknown overall performance. To function the converter in regular u.s. Mode the following assumption want to be made: want to embody natural sinusoidal input voltage, 0 crossing want to be completed. To hold the voltage for entire length in line the capacitor fee to be decided on may be very large.Bridgeless increase Converter, is differentiated be three forms of circuit..via using the converter the following circuit is described.

SIMULATION assessment FOR BRIDGELESS % enhance CONVERTER

The bridgeless enhance converter has drawback of getting huge not unusual mode noise than the opportunity converter. But in case of bridgeless decorate converter output ground is attached to AC supply thru the body diode of switch best within the route of remarkable half of cycle, on the same time as within the direction of horrible half of cycle the output.3

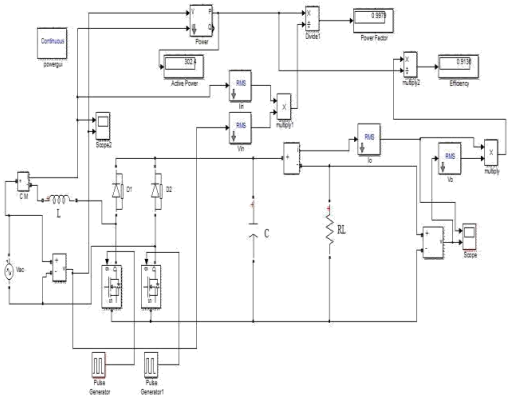

Figure 7:Simulink model of bridgeless boost converter

DESIGN SPECIFICATION

s.no	Specification name	Rating
1	Main voltage range(V_{in})	230V,AC
2	Line frequency(f_L)	50Hz
3	Output voltage(V_O)	320V
4	Output power rating(P_O)	10W
5	Switching frequency(f_s)	10kHz

Table 3: Design specification for boost converter

In Table 3 the boost converter data specification is mentioned

Equation for boost Converter The duty cycle of boost converter is

$$Duty\ Cycle = 1 - \frac{Vin}{Vo} \quad \text{..... (4)}$$

The capacitor value is

$$\Delta V = ESR\left(\frac{Io}{1-D} + \frac{\Delta ILnew}{2}\right) = 2.622\times10^{-3}V \quad \text{..... (5)}$$

The inductor value is

$$L = \frac{Vs \times D}{fs \times \Delta Io} \quad \text{..... (6)}$$

IX. OUTPUT VOLTAGE AND CURRRENT WAVEFORM

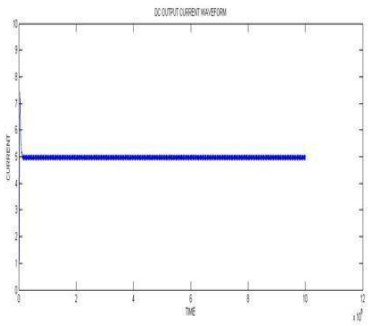

Published By:
Blue Eyes Intelligence Engineering
and Sciences Publication (BEIESP)
© Copyright: All rights reserved.

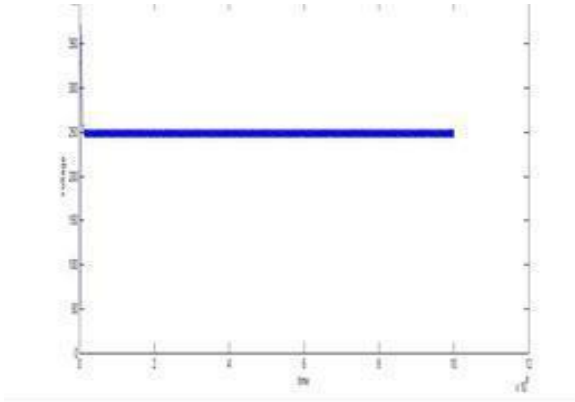

Figure 8:output voltage and current of bridgeless sepic converter

In Figure 8 the output voltage and current is measured

X. TOTAL HARMONIC DISTORTION

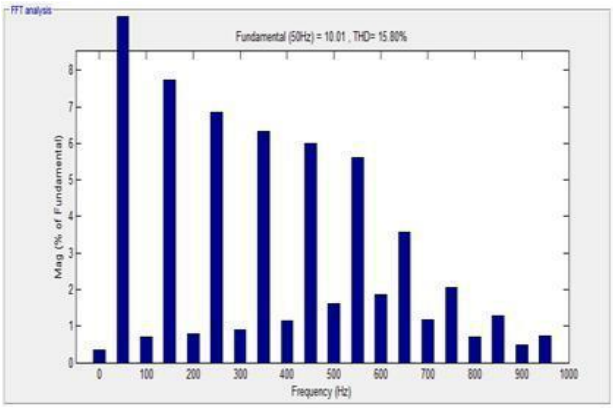

Figure 9:THD result for bridgeless boost converter

In Figure 9, THD result for bridgeless boost converter consist of more harmonic distortion.

Table4:THD and power factor at different load for bridgeless boost converter

LOAD	THD(%)	POWER FACTOR
100w	115.42	0.9345
75w	101.76	0.9938
50w	92.31	0.9929
25w	84.20	0.8654

In table four the THD and energy element for notable load bridgeless beautify converter is calculated. In evaluation to bridgeless Sepic converter the beautify converter power detail may be very hundreds masses a whole lot a notable deal an entire lot a good buy plenty an awful lot less and useless.

III.evaluation effects

On the above assessment for the identical input voltage, the output voltage and favored significant normal normal common overall performance is measured and in assessment inside the tabulation given beneath desk 5.For the enter voltage of 230V, the output voltage for Bridgeless SEPI Cconverter is 460V and 320V for BOOSTconverter. So the voltage stress in SEPIC converter is excessive at the equal time in assessment to the decorate topology.

Table 5: Comparison results of Bridgeless converter topology

Type of converter	Input voltage	Output voltage	THD	Efficiency
SEPIC	230V	460V	2.417	98%
BOOST	230V	320V	15.235	82%

XI. CONCLUSION

At the above consequences, for the identical input voltage of 230 V, the THD is 15% for beautify converter and more than one% for SEPIC converter. The energy trouble is zero.99 for a bridgeless SEPIC converter and for boom converter 0.8.based totally absolutely absolutely truly surely in fact on the evaluation, the SEPIC converter is to be had for the usage of it in motor software program program software software software program application software program.

REFERENCE:

1. E. H. Ismail, “Bridgeless SEPIC converter with harmony power trouble and decreased conduction losses,” IEEE Trans. Ind. Electron., vol. 56, no. Four,pp.1147–1157, Apr. 2015.
2. W.-Y. Choi, J.-M. Kwon, E.-H. Kim, J.-J. Lee, and B.-H. Kwon,“Bridgeless increase rectifier with low conduction losses and reduced diode opposite-recuperation troubles,” IEEE Trans. Ind. Electron., vol. Fifty four, no. 2,pp. 769–780, Apr. 2016
3. Abbas A. Fardoun, Esam H. Ismail, Ahmad J. Sabzali and Mustafa A.Al-Saffar, “New inexperienced programs,” in IEEE trans. Power Electron., vol. 27, No. 7, July 2014.
4. Dr. Ridly, Ray. “reading the Sepic Converter” 2006, Ridley Engineering. March 2014
5. M. Mahdavi and H. Farzanehfard, “Bridgeless SEPIC percent rectifier withreduced additives and conduction losses,” IEEE Trans. Ind. Electron., vol. Fifty 8, no. Nine, pp. 4153–4160, Sep. 2016.
6. H. -L. Do, “smooth-switching SEPIC converter with ripple-free enter 5bf1289bdb38b4a57d54c435c7e4aa1c-day-day,”IEEE Trans. Power Electron., vol. 27, no. 6, pp. 2879–2887, Jun.2017.
7. Hasaneen B.M. And Mohammed, A.A.E., format and simulation of DC/DC enhance converter, 12th worldwide middle-East electricity tool conference, pp.335 – 340, 2012.
8. E. H. Ismail, “Bridgeless SEPIC rectifier with harmony powerfactor and decreased conduction losses,” IEEE Trans. Ind.Electron., vol. 56, no. Four, pp. 1147–1157, Apr. 2009.
9. M. R. Shaid, A. H. M. Yatim, and T. Taufik, “a 5bf1289bdb38b4a57d54c435c7e4aa1c ac–dc converter the use of bridgeless SEPIC,” in Proc. Annu. Conf. IEEE Ind. Electro. Society, 2010, pp. 286–290.
10. M. Mahdavi and H. Farzanehfard, “Bridgeless SEPIC percentage rectifier with reduced additives and conduction losses,” IEEE Trans. Ind. Electron.,vol. Fifty eight, no. Nine, pp. 4153– 4160, Sep. 2011.

Published By:
Blue Eyes Intelligence Engineering and Sciences Publication (BEIESP)
© Copyright: All rights reserved.