International Journal of Engineering and Advanced Technology (IJEAT)
ISSN: 2249-8958 (Online), Volume-8 Issue-3, February 2019

Design and Development of an Automatic Solar Powered Digging, Seed Sowing and Dripping Machine.

Anshuman Kumaar Singh, Akhil Pillai, Bibhash Kundu, Hrithik Mohan, Gowreesh S.S

Abstract*: Agriculture forms an integral part of the Indian economy. The methodology implemented in carrying out agricultural activities faces many constraints such as non-availability of labor, low–productivity rate, irregularity due to weather constraints and fatigue. These constraints along with the widespread usage of the fossil fuels to power I.C engines or external combustible engines have added to the plight of the agriculture sector in our country. With the objective of eradicating such bottlenecks the idea of an automatic solar powered seed-sowing machine is introduced, which could effectively carry out the digging, sowing, and watering of the land at a reduced cost and with no harm to the environment. The mechanism involves the use of a solar panel to capture the solar radiation and simultaneously convert it into electrical energy for further storage. The electrical energy thus stored charges a 12V battery, which in turn provides the required input power to the shunt wound D.C motor. The motor transmits the power to the battery-controlled wheels and enables movement of the system. To enhance the functionality of the system a remote controlling operation and a water dripping unit is attached which shall help in maneuvering the system in the field and enable constant water supply after each digging and sowing operation. Seed sowing machine shall execute ground digging, seed sowing, and watering operation simultaneously with reduced cost and fatigue.

Keywords- direct current shunt wound motor, Solar panel, 12V battery, Rotary encoder, Microcontroller,, water- dripping unit, battery controlled wheels.

I. INTRODUCTION

Agriculture field contributes immensely to the development of the Indian economy and it shall continue to do so until the end of humanity. In the present scenario, most of the countries do not have sufficient skilled workforce in the agricultural sector and that affects the growth of developing countries. Therefore, farmers have to use upgraded technology for cultivation activity (digging, seed sowing, fertilizing, and spraying). Considering the current plight of the agricultural sector, it is the right time to automate the sector to overcome this problem.

Manuscript published on 28 February 2019.
***** Correspondence Author (s)
Anshuman Kumaar Singh, Mechanical Engineering, J.S.S Academy of Technical Education, Bangalore, India.
Akhil Pillai, Mechanical Engineering, J.S.S Academy of Technical Education,Bangalore, India.
Bibhash kundu, Mechanical Engineering, J.S.S Academy of Technical Education, Bangalore, India.
Hrithik Mohan, Mechanical Engineering, J.S.S Academy of Technical Education,Bangalore, India.
Dr. Gowreesh S.S,Associate Professor, Department of Mechanical Engineering, J.S.S Academy of Technical Education, Bangalore, India.

More than 70% of the population of India is affected directly or indirectly by the agriculture and its consequences. So a paradigm shift is needed to eradicate the usage of conventional, orthodox methods of farming with the objective to enable better techniques of farming. In any process of agricultural development, cost reduction and adequacy of the methodology adopted are the main criteria of
Research. These are the most important factor and proficiency in them can only be acquired by appropriate use of small, Portable and advanced technology. Manually seed sowing causes inefficient and inaccurate seed sowing with
Increased fatigue and improper sowing. This method will effectively carry out seed sowing row by row at a reduced labor and decreased cost. At a time, multiple strips are utilized/used for sowing process, which saves time and carries out better utilization of the land.

II. LITERATURE REVIEW:

"Design and Development of Automatic Operated Seeds Sowing Machine"
International Journal on Recent and Innovation Trends in Computing and Communication.
ISSN: 2321-8169 Volume: 5, Issue: 2, 277 – 279.
This research paper presented the design and working of an automatic seed-sowing machine. It utilizes the mechanism of chain and sprocket to transfer the energy generated from the rotational movement of the wheels to the fluted rollers.
The fluted rollers are set in motion due to the movement transferred from chains and it regulates the movement of seeds in a periodic manner. With each circular rotation of the roller, flaps open and close thus limiting the seeds per cycle. Furthermore, the guide pipes used to transfer the seeds to the ground. Due to this equal spacing between each consecutive seed planted prevails. However, despite the automatic sowing mechanism the movement of the entire machine requires labor and is not battery-powered.
To overcome the limitation we decided to introduce the concept of the remote control in our machine, it will limit the human intervention and make the device easy to use.
A Hall Effect sensor, installed along with a microprocessor, coordinates the movement of the entire arrangement. It is also provided with a numeric keypad, which enables the user to enter inputs. A 7805 voltage regulator is installed which keeps the voltage output constant.
"Solar Operated Automatic Seed Sowing Machine"
Cloud Publications International Journal of Advanced Agricultural Sciences and Technology 2015, Volume 4, Issue 1, pp. 67-71,

Published By:
Blue Eyes Intelligence Engineering and Sciences Publication (BEIESP)

Article ID Sci-223 ISSN: 2320 – 026X
This paper includes the modification of a solar panel to power the battery, which runs the motor to run the machine. The solar panel installed converts the solar energy into electrical energy, which is stored in a 12-volt battery. The power of the battery is used to run a motor, which by the use of chain drives runs the rear wheels. A bevel gear and chain drives utilize the power of the D.C motor to carry the movement of the device.
According to the methodology, the machine utilizes an AT89S52 microprocessor to automate the working of the seed-sowing machine. To clear the trajectory of the machine of any obstruction an IR sensor is installed which automatically detects any hindrance in the path of the machine and accordingly changes its course. The use of IR sensor adds on to the performance characteristics of the machine and makes it easier to maneuver the machine. A prototype of the machine performs digging up to 5 inches in three rows during the digging operation.

"Solar Powered Digging and Seed Sowing Machine"
International Journal for Research in Applied Science & Engineering Technology (IJRASET
Volume 5 Issue III, March 2017 ISSN: 2321-9653
This paper carries out the seed sowing and digging operation in a single cycle utilizing the solar energy acquired by the solar panel. Initially, solar energy is converted to electrical energy and it is stored in a 12-volt battery. This arrangement is attached to the shunt wound DC motor, which carries out the movement of the rear wheels, by the means of the chain drive mechanism. The machine is provided with a hopper to store the seeds, which is sown to the grooves made in the field. An AT89S52 microcontroller is employed in the machine, which gives a signal at the various pitch for the machine to sow the seed
The number of seeds dispersed by the hopper on to the ground is to be controlled by adjusting the opening of the hopper. This automatic machine effectively sows seed at a required pitch with the combined use of an IR sensor, which assists the movement of the machine by indicating for any obstacle in its trajectory.

"Solar Powered Variable Pitch Smart Seed Sowing System with Herbicides Sprayer"
International Journal of Engineering Trends and Technology (IJETT) – Volume 46 Number 7 April 2017
This paper presents an automatic robot, which incorporates the feature of seed sowing by utilizing the solar energy captured by the means of a solar panel. In operation, initially, the solar energy is stored in the battery in the form of electric current. The electric current is used to run a 17-watt DC motor, which is used as a drive system. The farmer first enters the pitch or distance at which the seed is to be sowed by means of a numeric keypad provided on the machine. The numeric input is recorded by the microcontroller and is processed accordingly. The movement of the machine is coordinated by the means of a rotary encoder. The encoder calculates the distance, which too is covered by the machine. When the machine stops at a specified pitch, a signal is sent to the microcontroller by which the process of releasing a seed from the hopper is initiated. The machine is installed with a plow in the lower side of the chassis to maintain a groove in the muddy track for the seeds. The arrangement is also provided with a herbicide spraying mechanism which injects the required material as and when required. We draw our inspiration of an insecticide spray from this particular machine and we plan to incorporate this mechanism in our project along with a dripping unit, which is to be controlled manually.

III. PRESENT PRACTISES:

The nursery is the part of agriculture. So as in farm, the feeding of all parts of seeds are not feasible because in the farm proper environment will not present, the wastage of seeds is possible. In addition, the chances of falling of unnecessary seeds during sowing are possible. Hence, in the nursery by maintaining proper environment required for the growing of plants care is taken. After growing of plants, those plants are taken and then they are used to plant on the farm. For this, the plants are produced by using a tray that has a number of holes as per the requirements in those whole the coco-peat powder is used to fill half of the hole and is followed by the seeds in those holes. Again, the powder is filled. As per the requirements of customers, the nursery produces different kinds of plants.
Nowadays in Nursery seed feeding is done manually which effects on productivity of the Nursery. The seed feeding activity takes more time, which results in fewer plantations of the seeds.

IV. PROPOSED SYSTEM:

The mechanism involves the use of a solar panel to capture the solar radiation and simultaneously convert it into electrical energy for further storage.
The electrical energy thus stored charges a 12V battery, which in turn provides the required input power to two shunts wound D.C motors, which are fixed to each of the rear tires of the wheel. The hopper, which acts a seed storage tank, provided with a geared roller rotates about the central axis thereby pushing each consecutive seed onto the two steel pathways bolted to the wooden platform at the base of the hopper. The solar charged battery powers the movement of the wheels controlled by the motors.
The power is transferred to the microcontroller setup, which transfers it to the motors thus carrying out the motion of the wheels. Two 6" cast iron plow which is attached to the front end of the arrangement, which makes a continuous groove on the ground surface creating a path for the seeds to be sown.
This vehicle has a water dripping mechanism, which can drop water and insecticide when required. The dripping system, when activated, drops the water mixed along with insecticide from the tank provided on the robot. The solar panel keeps on charging the battery whenever a charge controller attached to the system indicates the battery charge drops below a particular level and it. Thus, this vehicle forms a complete automated solution for the problems faced by the Indian farmers today. Moreover, as an added feature, we would also like to make the machine RC (remote controlled) by the coordination of the microcontroller board provided on the machine bed. This attempt is to avoid the usage of a numeric keypad to enter the specific distance after each set of transverse movement.

Published By:
Blue Eyes Intelligence Engineering
and Sciences Publication (BEIESP)

A controller will control the machine and the farmer can run it on a desired piece of land without having to stop it after each pitch. Finally, the entire system is solar powered which helps farmers to concentrate on agriculture without the need to remember to charge this machine.

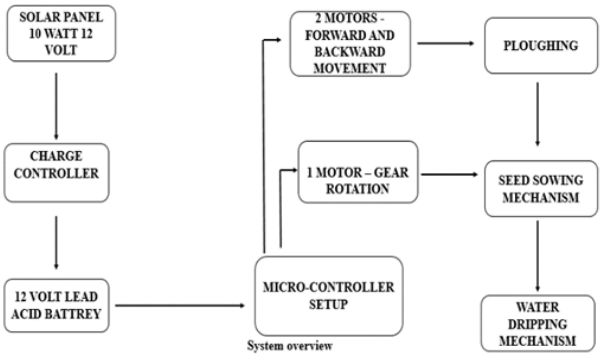

Fig 1: Flowchart of the proposed system

V.DESIGN OF THE SYSTEM:

The figure shows the CADD design of the entire fabricated model and its components. The material utilized in the construction of the sub-parts have been included in the specification sheet and simultaneously the weight of the entire model is calculated using CATIA V5.

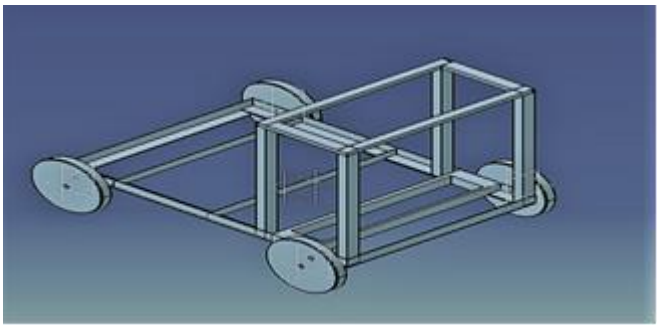

Fig 2: Initial design of the chassis with additional support for solar panel.

1. ERW STEEL CHASSIS WITH PLOUGHS AND LEVELLER:

The chassis of this entire model is of Electric Resistance Welded steel of rectangular cross-section, 24" × 16" and a thickness of 1" from all sides. The chassis weight is approximately 5 kg with additional structural features such as two cast – iron manually adjustable plows and a steel ground leveler plate, placed at the front and rear end of the chassis.

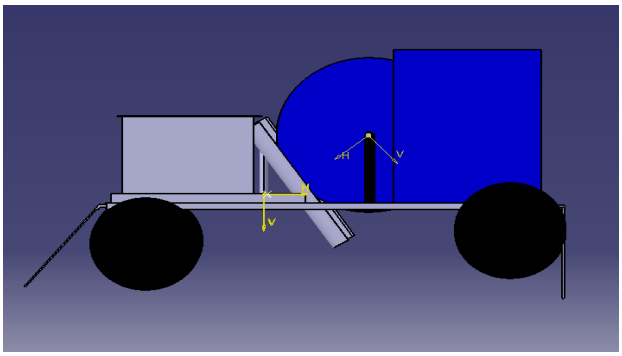

Fig 3: Front assembled view

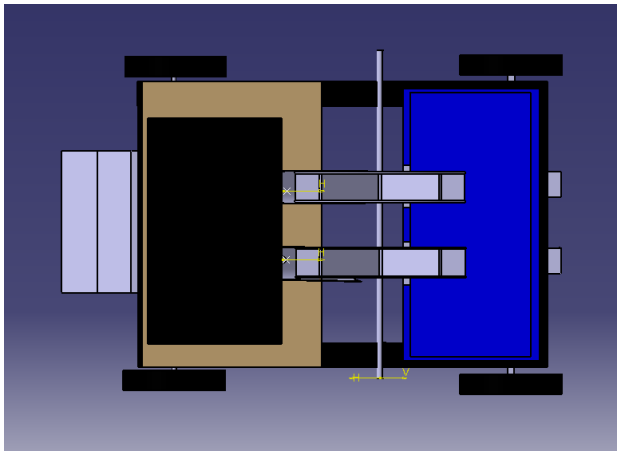

Fig 4: Top assembled view

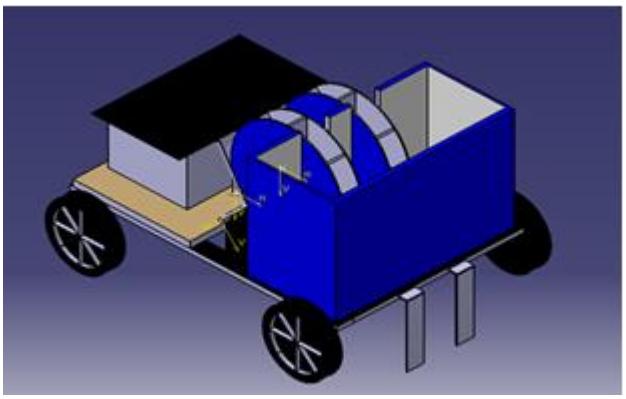

Fig 5: Design of the proposed system without the solar panel.

2. BATTERY POWERED REAR WHEELS:

The wheels of the model are durable rubber tires capable of sustaining rough terrain and provide stability to the entire structure. The rear wheels are driven by two 12 volts 10 RPM D.C motors powered by 12 volt 7.5 AH lead-acid battery thereby enabling transverse motion of the machine with limited human effort.

Fig 6. D.C motor operated rear wheels

3. SEED HOPPER AND ROTARY SEEDER MECHANISM:

This component of the machine is placed at the front end just above the iron digger and is of an aluminum composite plastic sheet. The hopper is bolted from the sides using aluminum bolts to maintain its robustness. At the backside of the hopper, a rotary gear arrangement is installed which carries out the seeding operation.

Published By:
Blue Eyes Intelligence Engineering
and Sciences Publication (BEIESP)

Fig 7. APC seed hopper and geared roller

4. WATER TANK AND DRIPPING SETUP:

The water tank is made up of plastic and is used to store water for the dripping operation. The tank has an opening at the top middle portion to enable the entry of water through a plastic funnel and for the outward movement of water; a pipe carries the water through a sprinkler to the burrows created by the iron plows. The flow of water is controlled by a knob, which is attached to the pipe.

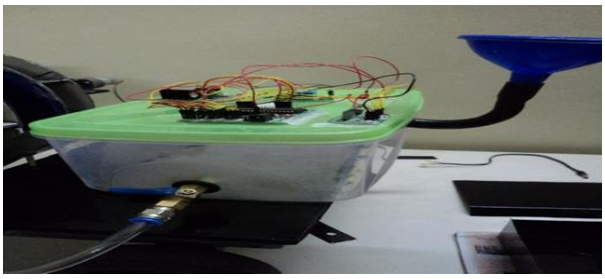

Fig 8. Funnel and water dripper unit arrangement

5. MICROCONTROLLER SETUP:

The entire mechanism of the machine is regulated by means of a microcontroller setup, which is fixed on the top of the dripping box. The arrangement contains an RF receiver, 8051 microcontrollers, relay switch an L298 Driver circuit and a pull up for balancing the power distribution.

The entire setup controls the transverse and backward motion of the machine via a remote control setup containing a transmitter and a 9-volt battery as a power source.

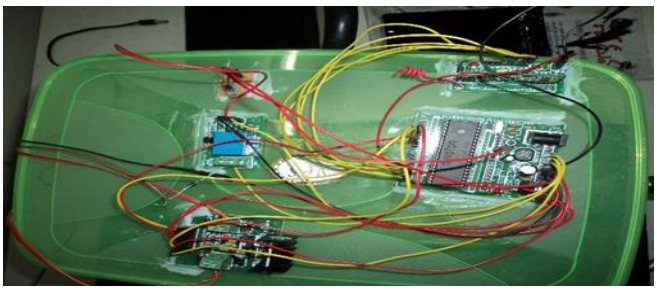

Fig 9. Microcontroller setup

VI. DESIGN CALCULATIONS:

1. Chassis: ERW Steel IS 2039
Weight: 8 kg
2. Battery: 12 V 7.5 AH
Weight: 3.5 kg
3. Solar Panel: 12 V 10 W
Weight: 3.8 kg
4. Hopper: ACP (aluminum composite plastic)
Weight: 3 kg
5. Cast iron plough:
Weight: 1.5 kg
6. Rollers:
Weight: 1.0 kg
7. D.C Motor -3
Weight - 0.6 kg

Total weight = 8 kg (Chassis) + 3.5 kg (Battery) + 0.2×3= 0.6 kg(3 Motors) + 3.8 kg(Solar panel) + 3.0 kg (Hopper) + 1.5 kg (cast iron plough) + 1.0 kg (ACP Rollers) = 21.4 kg (approx.).

EFFORT = 21.4 × 9.81 N
=209.934 N

We are using the wheel of radius 0.075 m
The torque of the wheel = F x kW x Rw
Where Kw = coefficient of rolling resistance for soil = 0.2
F= effort
Rw = radius of the wheel
T= 215.82 x 0.2 x 0.075
= 3.14901 Nm
Power required to run the system = 2×π×N×T/ 60,000
= 2×3.14×30×3.14901/60,000
= 0.0098929 Watt
= 9.89 KW
A motor of 12 volts 10 watts draws 300 mA under the maximum condition
In addition, 60 mA in minimum conditions.
Power transferred to the motors = V x I
= 12x 0.3
P = 3.6 watts
3 motor draws 3.6x5 watts of power = 18 watts
A lead battery 12 V 7.5 AH gives current of
I=P/V
I=18/12=1.5 A
Battery backup = 7.5/1.5 = 5 hours

SOLAR PANEL CALCULATIONS:

A solar panel of 12 V 10 Watt produces a current of
I=P/V = 10/12 = 0.83 A
If under 5-hour optimum condition the charge delivered by the battery to the motors = 0.83x 5
= 4.15 AH.

VII. CONTROLLING SETUP IMPLEMENTATION:

The 8051 microcontroller is of operating voltage of 5 volts and is the main power distribution center of the entire agriculture machine. The operating frequency is of 11.0598 Hz with four functioning ports and each port has 8 I /O pins. The left side of the micro-controller consist of an RF receiver used to receive signals from the transmitter placed on the remote controller setup. The front end contains an L298 driver circuit, which allows the direction and speed control of two D.C motors at the same time. This module consists of two screw terminal blocks specifically for motor 1 and 2 and the other screw terminal for the ground block, VCC for motor and a 5-volt pin which can be used either as an input or output. The P3.3 relay switch is kept adjacent to the pull-up resistor and is used primarily for seeding operation. The remote control is made on a wooden board and the RF transmitter is the main working body of this component. The power source to the remote is a 9-volt battery and the controller enables the machine to move forward backward and sideways.

Published By:
Blue Eyes Intelligence Engineering
and Sciences Publication (BEIESP)

The movement of the APC roller to drops the seeds is controlled by means of input given by the RF transmitter.

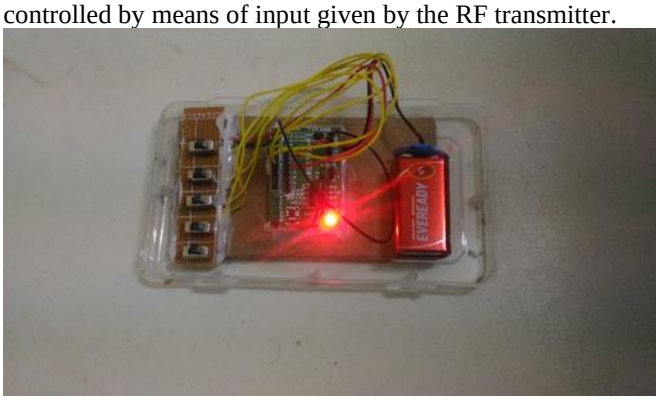

Fig 10. Remote control setup with RF transmitter

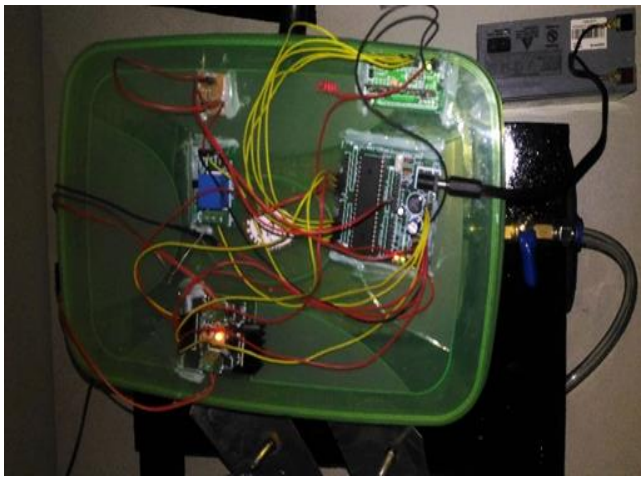

Fig 11. Microcontroller and Relay IC

RESULT:

The resultant model obtained is capable of carrying out seed digging, seed sowing and water dripping operations in a single cycle. The additional feature of a solar panel to recharge the battery as proposed in the initial design of the project had to be discarded owing to budget constraints and therefore the additional 600mm rectangular case that had to be incorporated to sustain a 12-volt 10-watt solar panel has been removed to make the machine economically efficient.

Fig 12. Fabricated chassis without solar panel support

Fig 13. Final assembled automatic digging seed sowing and dripping machine.

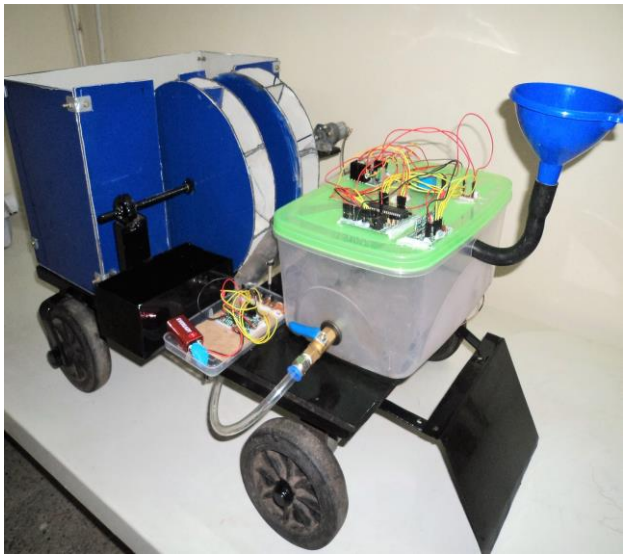

Fig 14: Final model without the solar panel

SEED ISOLATION DISTANCE:

TYPES OF SEED	ISOLATION DISTANCE (INCH)
OKRA	12-18”
SOYBEAN	2-3”
PEAS	3-4”
POTATO	16-18”
ONION	6”
JOWAR	5”
GROUNDNUT	6”

VIII. CONCLUSION:

The automatic seed-sowing machine shall have numerous favorable applications for the farmers during the farming process. Some of the benefits of this machine are:

1. Reduces fatigue and time involved in the seed plantation time.

Published By:
Blue Eyes Intelligence Engineering
and Sciences Publication (BEIESP)

2. Reduces the seed spacing and maintains the efficient distribution of seeds on the ground surface.
3. Incorporates the features of agriculture namely seed sowing, ground plowing and insecticide spraying in a single machine thereby making it more effective.
4. Usage of a remote control setup makes it easier for the farmer to maneuver the machine in the field.
5. User-friendly and safe to operate.

ACKNOWLEDGMENT:

It gives us immense pleasure to present our technical paper titled "Design and development of a solar-powered automatic Seed sowing, digging and dripping machine". We are thankful to our honorable guide Dr. Gowreesh Subramanya S, Department of Mechanical Eng. J.S.S Academy of Technical Education, Bangalore for his technical assistance and guidance. We are highly obliged for his constant support to the team.

REFERENCES:

1. Adityakawadaskar, dr. S. S. Chaudhari"Review of methods of seed sowing and concept of multi-purpose seed sowing machine" "international journal of pure and applied research in engineering and technology"IJPRET, 2013; Volume 1(8): 267-276.
2. "Solar Powered Variable Pitch Smart Seed Sowing System with Herbicides Sprayer" International Journal of Engineering Trends and Technology(IJETT)- VOLUME 46 Number 7 April 2017
3. "Solar Powered Digging and Seed Sowing Machine". International Journal for Research in Applied Science & Engineering Technology (IJRASET).Volume 5 Issue III, March 2017 ISSN: 2321-9653.
4. "Design and Development of Automatic Operated Seeds Sowing Machine".International Journal on Recent and Innovation Trends in Computing and Communication. ISSN: 2321-8169 Volume: five Issue 2. 277 – 279.
5. International Journal of Emerging Technology & Research Volume 1, Issue 3, Mar-Apr, 2014 (www.ijetr.org) ISSN (E): 2347-5900 ISSN(P): 2347-6079"Automatic Seed Planter Punching Type"

AUTHORS PROFILE:

Anshuman Kumaar Singh, Bachelor of Engineering, 2014, Mechanical engineering, J.S.S Academy of Technical Education, Bangalore.
PROFESSIONALCERTIFICATION: CATIA V5, CREO, SOLIDWORKS
Over 2 years of experience in design and simulation: ANSYS and MATLAB.
MEMBERSHIP: SAE, FPSI.

Akhil Pillai, Bachelor of Engineering, Mechanical Engineering, 2014, J.S.S Academy of Technical Education, Bangalore.

Bibhash Kundu, Bachelor of Engineering, 2014, Mechanical Engineering, J.S.S Academy of Technical Education, Bangalore, India.
PROJECT – F1 car making for SUPRA, SAE.
MEMBERSHIP– SAE, SUPRA
CERTIFICATION – CATIA V5, SOLIDWORKS.

Hrithik Mohan, Bachelor of Engineering, 2014, Mechanical Engineering,
J.S.S Academy of Technical Education, Bangalore, India.

Published By:
Blue Eyes Intelligence Engineering and Sciences Publication (BEIESP)