International Journal of Engineering and Advanced Technology (IJEAT)
ISSN: 2249-8958 (Online), Volume-8 Issue-2S, December 2018

An Efficient Matrix Converter for Induction cooking Applications

P.Sritha, R.S. Valarmathi, P.Ramya, V.MohanaPriya

Abstract: ***AC-AC converter employs bidirectional switches which can be used for AC-AC conversion. The main advantage of the matrix converter is regenerating energy to utility favor its usage in many applications. In this paper, we have designed a Matrix converter with buck and boost mode and a Sine wave Pulse Width Modulation technique for reducing harmonic content in the output of matrix converter. Domestic Induction cooking is the trending and favorable technology because of its high efficiency and safety factor. The induction cooking operation requires high frequency which can be impacted by the three leg inverter configuration in existing system. The three leg converter configuration is suffered from the power loss because of the DC link. The lack of DC link in between the rectifying and inverting mode of matrix converter favors its implementation in the domestic cooking. The automation of cooking is done by arduino, which reduces the manpower and it makes the system user friendly.9***

Keywords: ***Matrix converter, induction cooking, Arduino, SPWM***

I. INTRODUCTION

The matrix converter is defined as a AC-AC converter which utilizes bidirectional switches such as IGBTs or MOSFETs for its conversion process. The evolution and development of matrix converter initiated by Venturini and Alesina's work published in 1980. They have designed matrix converter as a matrix or array of bi-directional switches and described the various frequency behavior of the converter by rigorous mathematical analysis [1]. They have implemented the modulation method, which is also called as direct transfer function approach. The output voltage attained by the modulation method is the product of input voltages and modulation coefficients of matrix values. The various attractive features of the matrix converters such as simple and compact power circuit, sinusoidal output in the AC side and regeneration capability of the converters made its usage in frequency changers. The frequency changing concept is used in the induction cooking. The major section of the paper is developed as follows Section 1 deals with the literature survey of the existing systems Section 2 design of resonant matrix converter with direct AC- AC conversion to the Domestic cooking application with multiple voltage and frequency. Section 3 discuss about the MATLAB output of the matrix converter and SPWM models .Section 4 deals with hardware results and the connection of arduino with the induction heating application.

1. Literature Survey of Existing Methods

Rixin Lai *et.al* (2008) has proposed a single phase AC-AC converter for applications like aircrafts, where the weight of the converter topology plays a vital role. The previous work concentrates only on the converter design parameters like devices losses, harmonic injection [2]. However in heavy density applications, the author demands the need of examining all the features related to weight and size of the converter for getting aspect ratio. The main scope of the work is to build up a useful evaluation tool for the future applications in high density topology [2]. They developed a flowchart for developing lower weigh converter system. They have compared their proposed topology with the four converter topologies, a back-to-back voltage source converter (BTB-VSC), a non regenerative three-level boost (Vienna-type) rectifier plus voltage source inverter (NTR-VSI), a back-to-back current source converter (BTB-CSC), and a 12-switch matrix converter [2]. All the major parameters of the system like switching devices, heat sink, energy storage components. They have compared and analyzed all the four converter designs for low weight applications.

Omar Faruque *et.al* (2010) has developed Hardware in Loop for converters whose coefficient matrices and system equations are changed during runtime. In this paper two z-transform-based discrete techniques have been proposed and one of their derivative time-shifted Step Invariant Transformation is applied for simulating the Voltage Source-HVDC system [3]. In the above works, the converter needs dc filter links and energy storage component for its operation. The need for DC filter link is eliminated by the matrix converters. Matrix converters employs bidirectional semiconductor switches which operates in low frequency modulation with an ability to regenerate energy by eliminating the reactive storage elements to the utility system.

Manuscript published on 30 December 2018.
***** Correspondence Author (s)
P.Sritha, Assistant professor, Department of EEE, Bannari Amman Institute of Technology, Sathyamangalam, Erode-638401, Tamilnadu, India (Email: sritha06@gmail.com)
R.S. Valarmathi, Senior Professor, Department of ECE, Bannari Amman Institute of Technology, Sathyamangalam, Erode-638401, Tamilnadu, India (Email: atrmathy@gmail.com)
P.Ramya, Assistant professor(Senior Grade), Department of EEE, Bannari Amman Institute of Technology, Sathyamangalam, Erode638401, Tamilnadu, India (Email: ramyap@bitsathy.ac.in)
V.MohanaPriya, Assistant professor, Department of EEE, Bannari Amman Institute of Technology, Sathyamangalam, Erode-638401, Tamilnadu, India (Email: mohanapriyav@bitsathy.ac.in)

Somnida Ratanapanachote *et.al* (2006) developed a three phase switch mode converter which directly converts the low frequency into the high frequency output without a dc link [4]. The system has reduced the harmonic content of the rectifiers by eliminating electrolytic capacitor. The matrix converter which consists of twelve IGBT switches which can operate as both rectifier and inverter with space vector Pulse width modulation schemes. .Lixiang Wei *et.al* (2010) has compared the dual bridge matrix converter using IGBT with conventional matrix converter and DC-AC converter. The author has applied zero current and zero voltage PWM techniques for switching and ZVPWM technique has higher power cycling capacity (mean time to failure of devices) than the ZCPWM techniques. The MTTF is a main parameter in matrix converter, since it has a much higher number of powers switches [5].

Thiago B. Soeiro *et.al* (2011) has applied the commercial configurations in the converters by using voltage restorer. These voltage regulators are mainly used to regulating voltage from grid and to reduce the harmonic content. But the fast switching strategy is a problem [6]. Oscar Lucia *et.al* (2010) has presented a load adaptive control algorithm in series resonant inverter which is employed in domestic heating applications. The paper pays attention on EMC requirements like digital integrality, efficiency, flicker standards and user performance [7]. The load adaptive algorithm is the combination of different modulation schemes. The proposed algorithm has used two modulation schemes such as Square wave modulation in the medium and high output power applications and Pulse density modulation in the low output applications.

II. DESIGN OF MATRIX CONVERTER

2a. Working of a Single Phase Matrix converter

The DC link present between the source and AC load systems makes the AC-AC conversion process as a indirect process. The AC-AC converters compose of one rectifier and one inverter unit with reactive components for energy storage purpose. The rectifier converts the input AC into DC and then converts DC into AC with variable amplitude and frequency. The need of DC linkage and energy storage element is completely eradicated in matrix converters. Matrix converters employ bidirectional switches such as MOSFET or IGBTS for AC-AC conversion with a capability of regenerating the power [8]. The matrix converters require higher switching components for its conversion, but able to produce the output with reduced harmonic content and improved power factor. The single phase matrix converter employs eight bidirectional switches and utilizes only two switches for operating in four operating modes [9]. The sinusoidal PWM technique is used to give the pulse signals to the bidirectional switches. Bi directional switch is the combination of IGBT and Diode.

In this topology only two switches will be in operating condition and the remaining switches will be in non operating condition.

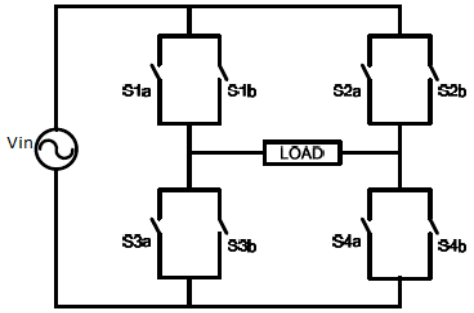

Fig 1 Diagram of Single phase Matrix converter on AC side

The above diagram shows the matrix converter working in rectifier mode during the positive cycle. The switches S1a and S4a will be in operating condition and during the negative half cycle switches S2a and S4a will be in operating condition [10]. The below diagram shows the matrix converter working in inverting mode .In this switches S1b and S4b will be in on condition during positive half cycle and switches S2b and S3b will be in on condition during negative cycle[10]. Thus the power is regenerated in the rectifier mode of operation.

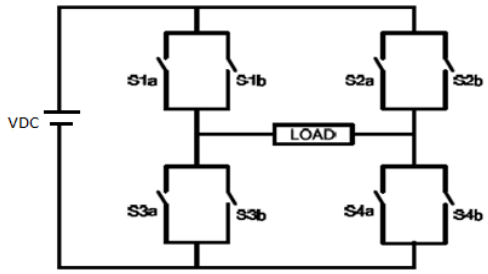

Fig 2 Diagram of Single phase Matrix converter on DC side

The switching strategy of the matrix converter is tabulated in the following table

Table 1: Switching Strategy of Matrix Converter

Switches	operation		Mode of operation
	Positive	negative	
S1a	On	Off	Rectifier
S2a	Off	On	Rectifier
S3a	Off	On	Rectifier
S4a	On	Off	Rectifier
S1b	On	Off	Inverter
S2b	Off	On	Inverter
S3b	Off	On	Inverter
S4b	On	Off	Inverter

2b. Working of Proposed System

We have used this principle of matrix converter in our proposed system with an inclusion of another pair of bidirectional switches which can use for control and commutation purpose. We have used this matrix converter in domestic heating application, which requires high switching frequencies for their operation.

Published By:
Blue Eyes Intelligence Engineering
and Sciences Publication (BEIESP)

The various features of matrix converters such as simple commutation, unity power factor have favor its usage in the domestic induction heating. Sinusoidal pulse width modulation is employed for the operation of IGBT in addition to modulating the amplitude of voltage [11]. Sine wave pulse width modulation produces the sine wave AC output from the DC input by generating one or more square pulses per cycle by reducing the harmonic content of the AC output waveforms. The matrix converter can able to work in buck converter and boost converter modes with variable operating frequencies. The MATLAB model of the proposed matrix converter is presented in the figure and the other parameters for the suggested converter are also tabulated in the table.

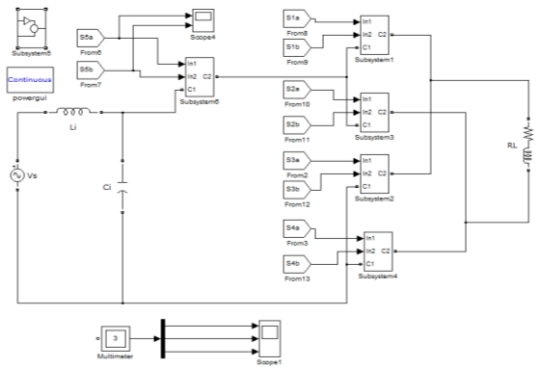

Fig 3 MATLAB model of the proposed converter

Tabulation 2 Block Parameters of Matrix Converter

Component	Values
Input source (AC)	50 V
Frequency of carrier signal, fc	20 KHz
Frequency of reference signal, fr	50 Hz
Duty cycle (D)	0.4,0.7
Output resistor, R	100 Ω
Output Inductor, L	3 mH
LC filter	L= 0.1 mH C= 6.8 μF

The reference signal model and switching control pattern for the proposed converter is shown in the figure 4 and figure 5 respectively.

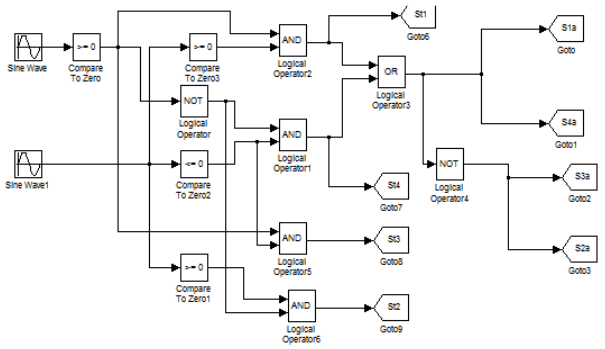

Figure 4 Reference Signal model of the SPWM

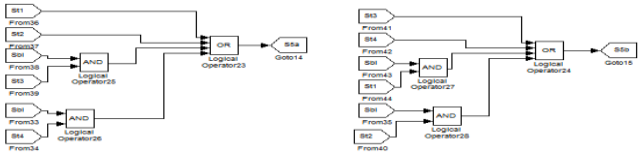

Figure 5 switching signal model of Matrix converter

The output of the SPWM is shown in the figure given below.

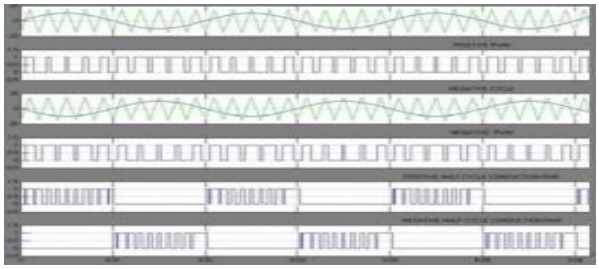

Figure 6 Output of SPWM technique

The simulation output of the matrix converter for duty cycle 0.5 and for the input voltage of 40 volt is shown in the figure.

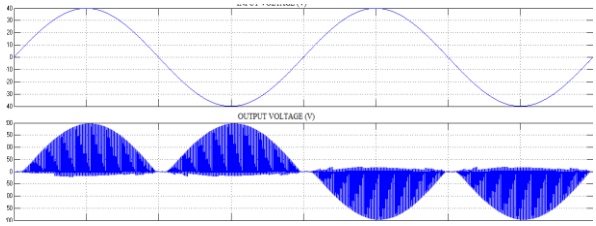

Figure 7 Output of the Matrix converter

Furthermore output of the suggested converter has been compared with the voltage source inverter for various duty cycles in terms of loss in power and efficiency [11]. The power loss of matrix converter is lesser than the power loss of other forms of inverter. The efficiency of the matrix converter is better than the existing voltage source inverter, since it has no filter stages in the output for getting the AC output [12].

III. IMPLEMENTATION OF MATRIX CONVERTER IN INDUCTION COOKING

We have implemented our proposed matrix converter in domestic application like induction heating with smart controls [13]. The block diagram representation of the experimental setup is shown in the figure. The blocks consist of AC Supply, Electro Magnetic compatibility (EMC) filter, Matrix Converter (MC), induction load. The process of AC-AC conversion can be recognized by implementation of a rectification stage and an inverting stage or by using a direct conversion or by using a hybrid Matrix Converter (MC). The quasi directional AC-AC Converter can able to operate as rectifier and inverter of its bidirectional switches. The harmonics present in the input supply can be reduced by the filter. The proposed matrix converter has lesser switches when compared to the half bridge resonant converter.

Published By:
Blue Eyes Intelligence Engineering
and Sciences Publication (BEIESP)

This leads to the decrease in the supplementary circuits such as control and driver circuits and lossless snubber networks. The reason for implementing arduino is for smart control applications as setting of temperature for various cooking items.

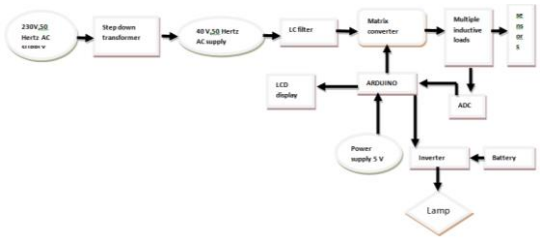

Figure 8 Block diagram representation of the Matrix converter

The AC supply 230V is step down into 40 volt input supply for the operation of the matrix converter. Then the input supply is given to the voltage regulators for conversion of 5 V and 9 Volts. This regulated output supply is given to arduino for its operation. The temperature sensor senses the temperature of the cooking item and the output. The set temperature and cooking temperature will be displayed on the LCD display which makes the system as a communicative tool for the user. The 9 pin of arduino is connected to the relay and the output from arduino nano is boosted by the driver circuit for driving the load. The matrix converter provides the variable frequency required for different cooking loads. The induction cooking can be started by setting the temperature to the cooking load. If the set temperature reaches the cooking temperature, then the cooking is automatically stopped by the arduino. We can also turn on and off the loads manually. The relay is mainly used to give the power to the load whenever there is a failure of power supply. The main work of the arduino is set the temperature for various types of cooking loads. So that smart control over the induction heating is achieved and it can be connected to IOT apps for cooking through internets.

IV. RESULTS AND CONCLUSION

The hardware output result of the induction cooking is shown in the figure below. In hardware, a driver circuit is implemented to drive the arduino and relay. A battery module is connected to give the power to one of the induction cooking during the failure of power supply. Here we have implemented the program for arduino controller and it is tested for the induction loads by using the Proteus software. The hardware model is tested for cooking of various items like milk, rice, water by setting the temperature. Whenever the temperature of the cooking item reaches the particular temperature, the arduino receives the command from the sensor and turns off the cooking automatically.

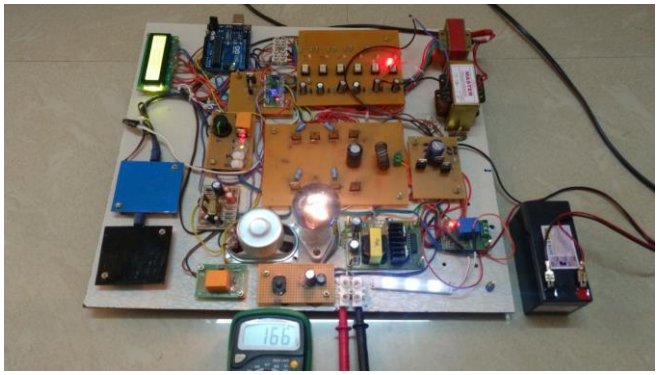

Fig 9 Hardware setup of Induction Cooking Prototype

The application of suggested single phase matrix conversion in domestic induction heating is detailed analyzed in this paper. The simulink model of suggested matrix rectifier is presented with simulink model of SPMC switching topology for reduction of harmonics. The proposed matrix converter has also fewer losses when compared to the half leg inverter. Arduino implemented in the induction heating further makes the better cooking. Furthermore the system can be connected to the IOT for smarter controls.

REFERENCES

1. Y.Keping and M. F Rahman., "*A matrix Z-source-converter with AC–DC bidirectional power flow for an integrated starter alternator system,"* IEEE Transactions on Industrial Applications-2009., volume. 45, ,no. 1, page no. 239–248.
2. Lai.R, Wang.F, Burgos.R, Pei.Y, Boroyevich.D, Wang.B, Lipo.T.A, Immanuel.V.D, and Karimi.K.J *"A systematic topology evaluation methodology for high-density three-phase PWM AC–AC converters,"* IEEE Transactions on Power Electronics-2008, vol. 23, no. 6, page no. 2665–2680.
3. Omar.M.O, Dinavahi. V, "*Hardware-in-the-Loop Simulation of Power Electronic Systems Using Adaptive Discretization*," IEEE Transactions on Industrial Electronics-2010, Volume: 57, Issue: 4, April 2010,page no. 1146-1158.
4. S.Ratanapanachote, C.Han Ju, and P.N.Enjeti, "*A digitally controlled switch mode power supply based on matrix converter*," IEEE Transactions on Power Electronics-2006, vol. 21, no. 1, page number. 124–130.
5. Lixiang.Wei, Thomas Lipo., and R..A. Lukaszewski "*Comparison of IGBT cycling capabilities for different AC/AC topologies*," IEEE Transactions on Industrial Applications- (2010), vol. 46, no. 6, page number. 2475–2483.
6. Thiago B. Soeiro, Thomas Friedli, Jörgen Linner, Per Ranstad, Johann W. Kolar (2011) "Comparison of electrostatic precipitator power supplies with low effects on the mains," 8th International Conference on Power Electronics - ECCE Asia, page no : 2382 - 2389
7. O. Lucía, J.M .Burdío, I. Millán, J. Acero, D.L Puyal, and L.A.Barragán, "*Efficiency oriented design of ZVS half-bridge series resonant inverter with variable frequency duty cycle control*," IEEE Transactions on Power Electronics-2010, vol. 25, page no: 1671–1674.
8. E Babaei, Hosseini , Gharehpetian "*Reduction of THD and low order harmonics with symmetrical output current for single-phase ac/ac matrix converters*". Journal of Electrical Power Energy Systems -2010 Page no :225–235.

Published By:
Blue Eyes Intelligence Engineering and Sciences Publication (BEIESP)

9. Baskaran, SP Natarajan, S S Sundari, D Thamilarasi *"A novel matrix converter based single phase to three phase converter"*. International Journal Science Techniques Automatic Control Computing Engineering IJ-STA, page number:1092–1107.
10. K.Vijayakumar, Raj, "*Realization of matrix converter as revolutionized power electronic converter employing sinusoidal pulse width modulation*." International conference on computational intelligence and computing research (ICCIC-13), 26 –28 Dec 2013, page number 1–5.
11. J.Rodriguez, M. Rivera, JW Kolar, Wheeler, "A *review of control and modulation methods for matrix converters*." IEEE Transcations on Industrial Electronics-2012 Page No:58–70
12. M. Hornkamp, M. Loddenkötter, M. Münzer, O. Simon, and M. Bruckmann, *"EconoMAC the first all-in-one IGBT module for matrix converters*,"in Proc. EUPEC, 2005.
13. J. J. Acero, JM Burdio, L. A. Barragan, D. Navarro, R. Alonso,J. R. Garcia, F. Monterde, P. Hernandez, S. Llorente, and I. Garde, "*The domestic induction heating appliance: An overview of recent research*," in Proceedings. IEEE Applications of Power Electronics. Conference. Expo., 2008, page number. 651–657.

Published By:
Blue Eyes Intelligence Engineering and Sciences Publication (BEIESP)