International Journal of Engineering and Advanced Technology (IJEAT)
ISSN: 2249-8958 (Online), Volume-7 Issue-4, April 2018

GIS Enabled Black Box System for Accident Alerts

Meera Gandhi, Keshireddy Vishruth Reddy, Kota Hemanth

Abstract: ***The proposed black box system is used to send an alert message to the registered mobile numbers whenever an accident occurs. Black box is connected to various sensors to detect any errors in the vehicle. Due to the presence of GIS feature, the location of the vehicle is also sent to the registered mobile numbers. The black box system also sends an alert message to the nearest hospital. All the sensors are connected to arduino chip.***

Keywords: GIS Feature, Mobile Numbers, Black Box System

I. INTRODUCTION

The paper we proposed black box implementation with GPS facility for automobiles. In case of accident to the vehicle and if some injury happens to the passengers there could be loss of life due to delayed medical service. So the proposed system ensures that a message and location is sent to the nearby hospitals for an immediate help. It also sent a message to relatives mobile numbers and police station. The position of vehicle can be located in terms of longitude and latitude with a margin of error not more than 5meters from the actual position. The system also records the details about the speed and travelled distance of the vehicle.

II. SIGNIFICANCE OF BLACK BOX IN AUTOMOBILES

In any case of an accident, the life of the person can be saved by providing proper medical help on time. Many people have died in accidents due to the lack or delay of medical help. So, By implementing the proposed system in automobiles many life losses can be prevented. Therefore, Implementation of black box in automobiles will be one of the emerging technologies in automobile industry.

III. OBJECTIVES OF BLACK BOX

The main objectives of the system is to send a message to nearby hospitals, relatives and police station in case of accidents. It is also used to locate the vehicle and record other parameters like speed and distance travelled by the vehicle.

Block Diagram:

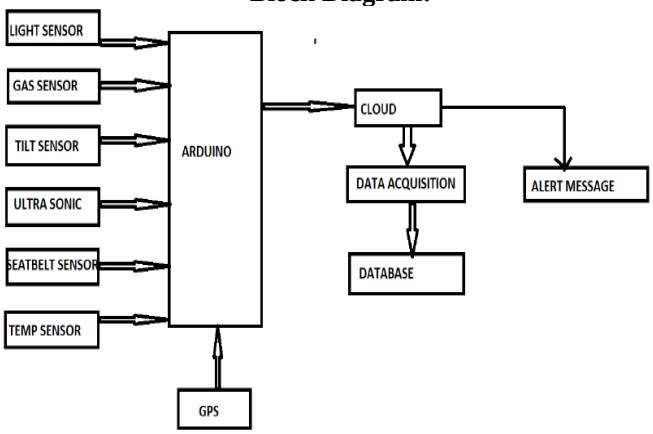

Flowchart:

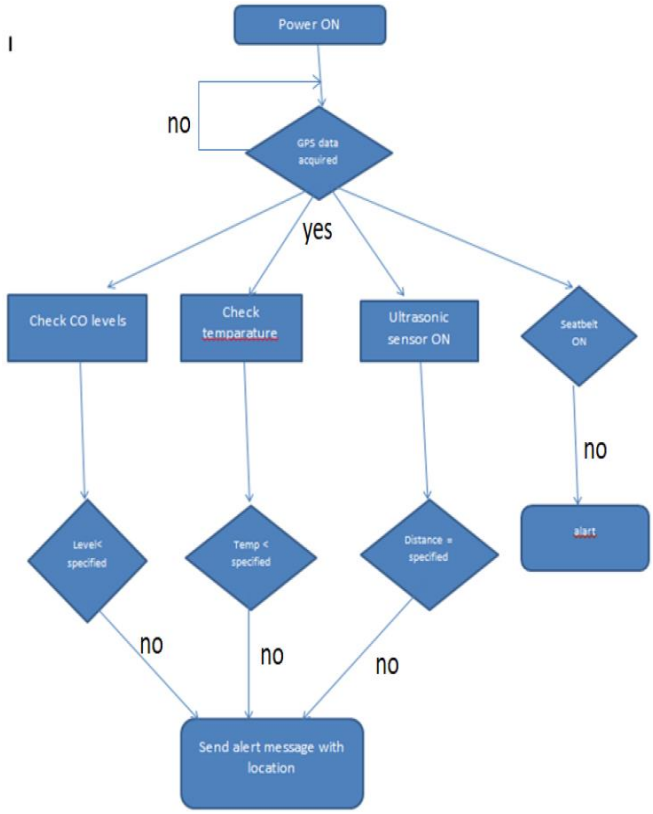

IV. PREVIOUS WORKS

Black box technologies have been in automobiles since few years. The main aim of the existing system is to record the data. This system is mainly to prevent theft and to analyze the accident. The existing system sends an alert message to the driver in case of theft. The major disadvantage of this system is it can get complicated and is not very much reliable. This system can also get expensive. Based on "Accident analysis and prevention"

Manuscript published on 30 April 2018.
***** Correspondence Author (s)

Meera Gandhi*, Department of Computer Science and Engineering, Sathyabama Institute of science and Technology, Chennai (Tamil Nadu), India.

Keshireddy Vishruth Reddy, Department of Computer Science and Engineering, Sathyabama Institute of science and Technology, Chennai (Tamil Nadu), India.

Kota Hemanth, Department of Computer Science and Engineering, Sathyabama Institute of science and Technology, Chennai (Tamil Nadu), India.

Published By:
Blue Eyes Intelligence Engineering and Sciences Publication (BEIESP)

Explains the systematic review and meta-analysis of evidence from epidemiological studies. which eradicate the risk of road accidents associated with the usage of drugs. The odds ratio of accident involvement are given for anangesics, cannabis, cocaine, opiates and zopiclone. While driving usage of drugs tends to have a larger effect for serious accidents. Taking cannabis a while ago before driving it can persists a long time in our blood with an increased risk of accidents while driving.

In a survey studies included a meta-analysis where most of the accidents are with fatal injuries. But alcohol is not listed in the survey because it is based on drugs. A test was run for the estimates of risk associated with the benzodiazepines. But the quality of data and statistical analysis part will be real But there is need for more research for the better control of cofounding the factors to how drug use is measured with the usage of the laboratory analysis. In a journal called "GIS tools for accident analysis" the author states the advantages of using GIS system in analysis of road accidents. The GIS system gives you a more accurate data of the accident location. It also gives a geographical referred data. After analysis the result of all the GIS tools Moran's 1 and getis-ord statistics are good options.

Machine learning has been evolving fast in the current world. Machine learning can be used in the welfare of science and society. It can be used to detect privacy breaches in medical field or predict weather changes and also used in automobile field.

Most of the accidents occur due to the driver's dangerous or inattentive driving. In present days due to the availability of various sensors we can detect the hazardous driving. Mostly we can find it by using gyro sensor data. Algorithm is found to detect zigzagging in the lane or in between the lanes. With this the driver can be sent a warning or fine based on driver's behaviour.

Crash prediction can be done in several ways. Crash may occur due to many reasons like weather. Discrete loop detectors are used to collect data like web-crawl weather data. Risk will be detected by support vector machine and matched case control method.

GUHA data mining technique and it's software Implementation is used in analysis of road accidents in years 2004 to 2008 in Finland. Big matrix data can be studied in general. GUHA method is useful in searching smaller size data in between a large matrix data. Black box in automobile is emerging very fast in current world. They can be used to record the data like acceleration and behaviour of the driver and also used to send an alert message when predefined parameters are exceeded like speed. Black box will be connected to cloud and updates the system which can be used to alert nearby hospital.

V. IMPLEMENTATION

In the proposed system many sensors like temperature sensor, speed sensor, seatbelt sensors will be used. All the sensors will be connected to an audino chip. The audino chip will be connected to the black box. Whenever the vehicle is met with an accident the sensors detect the danger and sends an alert message to the nearby hospital. An alcohol sensor and seatbelt sensors are also used such that the vehicle won't start if the driver is drunk or when he won't tighten the seatbelt. The vehicle can be tracked due to the availability of GPS feature. When the accident occurs the location of the vehicle will be sent to the nearby hospital and also the passenger's relatives. The location can be located by longitude and latitude of the vehicle.

A. Database

	SENSORS	READINGS	OUTPUT	
1	LIGHT SENSOR	1	NORMAL	MESSAGE NOT SENT
	GAS SENSOR	1	NORMAL	
	SEATBELT SENSOR	0	VIBRATION	
	TILT SENSOR		NORMAL	
	ULTRASONIC SENSOR	10CMS	NORMAL	
	TEMPERATURE	35C	NORMAL	
2	LIGHT SENSOR	1	NORMAL	MESSAGE SENT
	GAS SENSOR	0	ABNORMAL	
	SEATBELT SENSOR	1	NORMAL	
	TILT SENSOR		NORMAL	
	ULTRASONIC SENSOR	5CMS	ABNORMAL	
	TEMPERATURE SENSOR	50C	ABNORMAL	

B. Hardware Implemented

In this system, many sensors like smoke sensor, temperature sensor will be use to detect all the possible dangers. All the sensors Are connected to an audino chip to record all the data. The data will be recorded in cloud so that data loss can be prevented. A USB camera is fixed and connected to a raspberry pi chip to record the incident. Alcohol sensor and seatbelt sensors are used.

C. Hardware Used:

- Gas sensor
- Light ambient sensor
- Temperature sensor
- Seatbelt sensor
- Ultrasonic sensor
- tilt sensor

VI. CONCLUSION

The main focus of the proposed system is to save the life of the people who met with an accident and is been implemented in this project.

Published By:
Blue Eyes Intelligence Engineering
and Sciences Publication (BEIESP)

REFERENCES

1. JINMING YOUL, JUNHUA WANG1, JINGQIU GUO1(2017) "REAL-TIME CRASH PREDICTION ON FREEWAYS USING DATA MINING AND EMERGING TECHNIQUES" JOURNAL ON SPRINGER, VOL 25, ISSUE 2, PP 116–123
2. Esko Turunen(2017) "Using GUHA Data Mining Method in Analyzing Road Traffic Accidents Occurred in the Years 2004–2008 in Finland" " journal on springer, Vol 2, Issue 3, pp 224–231
3. Parveen Sultana H1, Senthil Jayavel2 Mudit Saraf3 and Saket Maskara(2017) "SMART VEHICLE COLLISION DETECTION AND SOS SERVICE" " journal on aladpubl, Vol 116, issue 12 , pp 137-
4. MR. SANJAY MOHAPATRA(2016), " REMOTE SENSING AND GIS" " journal on csi communications, Vol 40, Issue 9,pp 1-52
5. Elsevier B.V(2016)," GIS TOOLS FOR ANALYZING ACCIDENTS AND ROAD DESIGN" precedings on sciencedirect conference" journal on science direct, Vol 18 Pp 242-247
6. Sahar Alian, R.G.V. Baker, Stephen Wood(2016) "Rural casualty crashes on the Kings Highway: A new approach for road safety studies" " journal on sciencedirect, vol 95 part A, Pp 8-19
7. Lei Lin, Qian Wang, and Adel W. Sadek(2014) "Data Mining and Complex Network Algorithms for Traffic Accident Analysis" journal on trrjournal, vol 2460, pp 5-11
8. Rudin.c and wagstaff(2014) " MACHINE LEARNING FOR SCIENCE AND SOCIETY" " journal on springer, Vol 95, ISSUE 1, pp 1–9
9. Eunbi jeong, cheol oh, ikki kim(2013) "detection of lateral hazardous driving events using in-vehicle gyro sensor data" " journal on springer, vol 17, issue 6, pp 1471–1479
10. byung yun lee, yong yoon shin, hyun joo bae, " development of insurance server system based on vehicle driving information ", proceedings of 7th ieee international conference on computing and convergence technology (iccct), 2012, pp. 156-159
11. Rune Elvik(2012) "Risk of road accident associated with the use of drugs: A systematic review and meta-analysis of evidence from epidemiological studies" journal on Elsevier, Vol 60, Pp 254-267
12. Sung-Hyun Baek, Hwa-Sun Kim, Da-WoonJeong, Mi-Jin Kim, You-Sin Park, Jong-Wook Jang, (2011) "Implementation Vehicle Driving State System with OBD-II, MOST network", Proceedings of the 17th Asia-Pacific Conference on Communications (APCC), pp. 709-714
13. GAETANO VALENTI & MARIA LELLI & DOMENICO CUCINA(2010) "A COMPARATIVE STUDY OF MODELS FOR THE INCIDENT DURATION PREDICTION" " JOURNAL ON SPRINGER, VOL 2, ISSUE 2, PP 103–111
14. Abdallah Kassem, RabihJabr, GhadySalamouni, ZiadKhairallahMaalouf, "Vehicle Black Box System", Proceedings of the 2nd Annual IEEE System Conference, IEEE 2008
15. C. Mohamedaslam, Mohamed Sahal M.T. and Ajmal Roshan T.(2017) " A smart vehicle for accident prevention using wireless blackbox and eyeblink sensing technology along with seat belt controlled ignition system" proceedings of IEEE international conference on isbn information S Reeja, V S Jayaraj, "An embedded based approaches for accident analysis using event data recorder", *Electrical Instrumentation and Communication Engineering (ICEICE) 2017 IEEE International Conference on*, pp. 1-5, 2017.
16. S. Rekha, B. S. Hithaishi,(2017) "Car Surveillance and Driver Assistance Using Black box with the Help of GSM and GPS Technology" proceedings of IEEE international conference, Pp 297 – 301
17. Ahmed Aliyu; jonathan.g.kolo, olaniyi o.mikail(2017) " ultrasonic sensor distance induced automobile collision avoidence system" proceedings on IEEE international conference on electrotechnology , pp 354-358
18. jae jun yoo, dyhum kim, jonghugn park(2008) "disign implementation of magnetic sensor network for detecting automobiles" proceeedings of IEEE local network conference Soundarraj.V , Rajasekar.L (2013) " Design of Car Black Box Based on ARM" journal on ijett journal, Vol-1, No-2 Page 33.

Published By:
Blue Eyes Intelligence Engineering
and Sciences Publication (BEIESP)