International Journal of Engineering and Advanced Technology (IJEAT)
ISSN: 2249-8958 (Online), Volume-6 Issue-6, August 2017

Design of a Smart Energy Meter with Overload Trip Facilities

Naeem Javed, Muhammad Aamir Shafi, Nasrullah Khan, Mohsin Khan

Abstract*: Nowadays for running the domestic electric appliances like lamp, Motor and Air Conditioner, one of the most commonly used energy source is Electric energy. This is the reason that electric energy has become quite important in the daily life of people. In Pakistan, WAPDA (Water and Power Development Authority) is the main company whose sole purpose is the generation and distribution of electrical energy throughout the country and the consumer will have to pay according to the use of electrical energy. There are other companies that also generate electrical energy and distribute it to some of the area like K-electric and IPPS. So, a consumer knows how much energy has been consumed by the domestic electrical appliances when an employee of WAPDA checks the energy meter once a month and charged according to the units consumed in a month. In such a manner, a consumer does not get any information that how much energy has been consumed and he will have to pay a large amount of bill as he is unaware of his energy consumption. This way he is unable to manage his load according to his requirements. In this project, we are going to design a prototype of Three Phase smart energy meter. In order to make a conventional energy meter smart we are going to interface a microcontroller and GSM module with the energy meter. The purpose of microcontroller is that through this we are going to measure current and voltage for all the three phases and from these readings power will be calculated because we need to know the consumption before its management. For each phase, a user can set a predefined value of load, whenever this limit exceeds the user will get a message for that phase that the "system is overload". This will inform him about his load and after that he will manage his load accordingly. So, our designed prototype has got two advantages, first one is that user can set a threshold value of energy and the other one is that consumer will be informed whenever the threshold value of energy is exceeded. This will be beneficial for the user and also for the electric energy providing company. The meter will be trip on high usage of energy and WAPDA will be informed whenever there is short circuit. So, this can also provide safety for the domestic users. In the designed project, we have proposed different ways of reclosing the relay for each and every Phase as we have three Phases. User can reclose the first Phase just by pressing a touch button while the second phase will reclose automatically after a delay of one minute. A user can change this delay. The third Phase will reclose after a delay of two minutes in a condition that the user has managed his load otherwise it will remain open.

Index Terms*: Energy Meter, GSM modem, Arduino Microcontroller, Smart Grid.

Manuscript published on 30 August 2017.
***** Correspondence Author (s)
Naeem Javed, Department of Electrical Engineering, COMSATS Institute of Information Technology, Islamabad, Pakistan, E-mail: naeemkhan5602@gmail.com
Muhammad Aamir Shafi, Department of Electrical Engineering, COMSATS Institute of Information Technology, Islamabad, Pakistan, E-mail: aamirshafi@ymail.com
Nasrullah Khan, Department of Electrical Engineering, COMSATS Institute of Information Technology, Islamabad, Pakistan, E-mail: nasrullahk@comsats.edu.pk
Mohsin Khan, Department of Electrical Engineering, University of Engineering & Technology, Peshawar, Pakistan, E-mail: mhsnkhaan@gmail.com

I. INTRODUCTION

It's the era of advanced technology and researchers are trying for further development in the field of automation along with the application of wireless communication. Automated system with wireless application is quite popular and useful today [1]. Out of all the needs of human's electrical energy is the basic one and is fundamental for human progress [2,3]. The reason is that most of the appliances whether they are used in homes, industries or for agriculture purposes mainly utilize electrical power. Energy meter is used in order to know that how much energy has been consumed [1]. For this purpose, energy meter, will have to work constantly in order to measure the instantaneous value of voltage (V) and current (A) to give the value of energy (kWh) that has been consumed [1]. In this way, the energy provider will check the energy meter for energy units being consumed and will charge the user according to their set rules [4]. In order to make this process further simple and facilitate the consumer it is necessary to automate this process which will facilitate the users as well as utility providers [3].

Such a monitoring system is applicable wherever there is usage of electrical energy [1]. In Pakistan, the only electricity provider is WAPDA. WPADA have three categories for energy consumption i.e. Domestic consumers, Industrial and Commercial consumers. These categories are based up on the price of per unit consumption of energy [5]. Energy meter is a device that is used to measure the amount of energy being consumed. Each region has its own worker that will read the measurements from the energy meter and will make a bill according to the units consumed. The user will have to rely on the reading of the meter reader and there are situations that created problems for the consumers and the reason was false reading by the reader. This false reading is a common practice in Pakistan. This procedure is performed every month [4].

In this procedure, the consumer only knows about his consumption of energy and the bill when the WAPDA personnel visits the consumer home at the end of the month and most of the users don't know how to calculate the energy consumption. This is of quite importance, because when a user knows the consumption of energy they can easily manage their load and can save extra use of energy [6]. They cannot read energy consumption from their Wattmeter and that is not an accurate reading [6].

Published By:
Blue Eyes Intelligence Engineering and Sciences Publication (BEIESP)

Other disadvantage is the wastage of energy whenever the electrical energy is used without any sort of control. So, this project will implement GSM communication through which user will be informed whenever there is over usage of energy.

II. PROBLEM STATEMENT

Whenever the electrical energy is used in uncontrolled environment so there will be wastage of energy and the expenses of the consumer will also be high in the form of electricity bill. One of the method to reduce extra energy consumption is that we will have to make the residential community aware of the results of energy consumption. The consumers can only be aware about the energy consumption whenever they get notification about their extra energy consumption.

In Pakistan, the consumer does not know about the extra energy consumption because they do not know how to calculate electrical energy that has been used in their house. It is not possible for the user to calculate the amount of energy used by using description of each and every equipment. The energy meter is a device that shows the energy being consumed and most of the user do not know the bill calculation from the readings of electricity bill.

The utility provider reads the reading from the energy meter at the end of the month and calculate electricity bill for that month. In this procedure, the user only gets the electricity bill each month but they cannot do anything for energy management. This proposed design will inform the user whenever there is extra usage of electricity after exceeding a particular limit. One can change this limit according to their needs.

III. LITERATURE REVIEW

A. Evolution of Energy Meter

In early stages, electricity was only available to specific people of the society who have got the affluence. With the passage of time there was advancement in the field of technology that also encouraged to fulfill the demands of common people all over the globe. The history of energy meter hits decades back that also involves past researchers. In 1870's when electricity was used only for the purpose of arc lamps and telegraph and other devices. When Thomas Elva Edison invented electric bulb, after that the market of power energy became wide open for the common people in the year 1879. In 1888 AC ampere hour was introduced by Oliver B. Shallenger for the first time. Finally, the continuous improvement in the technology of metering resulted in the enlightenment of common people lives. [7].

Conventional Energy Meters and its Types

Those devices that measure and shows energy in reading form are known as energy meters. Since 19th century, traditional meters were used normally [8]. There is usually the exchange of data among electronic devices in an environment that is computerized for both the production and generation of electricity. The working principle of conventional energy meter is that there is an aluminum disc which is used for the finding of power usage [8]. Nowadays a digital energy meter is used but it also has some limitations. A simple single phase and two wire energy meter is shown below in the figure.

The energy meter whether it is electronic or earlier electro-mechanical is used to measure the consumption of energy in kWh and such readings will be recorded by personnel by visiting each and every house once a month [3]. After the collection of readings from the meter, the recorded readings will be provided to the provider in order to process the readings and the amount of consumed energy will be determined according to the tariff that already set by the provider [3].

This is a conventional way of getting readings from a meter and this method is prone to errors like human error while recording readings from the meter [1]. Not only this but in such a method the user only gets the information about consumption once a month. These days different research groups are working on the energy meter reading that is automatic [3]. Radio-based reading is employed in US [2].

There are two categories of automatic readings from energy meter, one is wired while the other one is wireless [3]. Wired system includes Telephone Line Network. The sole purpose of this approach is to get the record by the direct communication with the provider by the use of wireless protocol [1,4].

Fig.1 Conventional Energy meter [8].

Some of the limitations of the conventional energy meters are as follows.

- These traditional meters have unreliable nature as consumer will have to wait for the whole month for the bill.
- A specific mechanical structure supports the energy measurement process thus they are known as electromechanical meters.
- To get readings from the meters, a large number of employees will have to be hired.
- In order to encourage the customers, new tariffs on the basis of hours cannot be introduced in these meters.
- It is complicated to develop an application for the energy meter software and also the infrastructure of supportive network is complex.

Other than the above discussed disadvantages, there are other features that have been creating a huge gap between the customer and service provider due to the installation procedure of traditional meters.

Published By:
Blue Eyes Intelligence Engineering
and Sciences Publication (BEIESP)

There are different types of energy meters. Although there was development in the energy meters that helped the consumers about the consumption of electricity but the energy consumption's statistics remained the same.

Below are some of the types of energy meters that are explained:

Table 1: Various Electricity Meters [9]

Type	Description
Electrolytic Meter	In this type of meter there is an electrolyte through which current passes. One of the limitation is that of mechanical consideration.
Commutator Meter	For the variation of current load there is a Brush-shifting device and commutators having small diameter helps in insulation. Its limitations include not enough load characteristics, high cost of maintenance and there is no proper insulation.
Mercury Motor Meter	Performance was improved when this meter was introduced. It has a got a rotor in it which helped in the calibration.
D.C Watt Hour Meter	This meter was designed for circuits having heavy currents where the coefficient of temperature is high. This one is equipped with time switch which indicates the demand. Another benefit is that it's a sort of clock type which reduces variations in voltage due to the decreased of shunt losses.
Single Phase Induction Meter	In this meter performance is improved considerably and work has done on the magnetic conditions in order to control the consumption of energy.
Poly-Phase Watt Hour Meter	Whenever the meter has lagging power factor that shows the features of current transformer. Calibration, interaction effects and high effects of shunt loss are the greatest disadvantages of such a model.

B. Smart Grid

Smart Grid is one of the major development in the field of electricity grid. Nowadays the electricity has become weaken due to the variation of load. The other reason is that of population that is increasing day by day which shows that the electrical grids have become fragile. There is a direct relation between the grid and population.

To make the grid efficient through remote controlling and improving reliability, measure the consumption during communication which is assisted by the delivering of real-time data to customers, provider and vice-versa is known as Smart Grid [10]. Smart Grids have smart sensors. The purpose of these sensors is to send back the collected data to provider and these can point out the location of power failure and also protect the power lines from overheating. It has the capability of self-healing operation. Actually, the idea of Smart Grid gave birth to the idea of Smart Meter. Its installation will reduce the carbon emission by 5% by the year 2030 and it will have a better impact on the environment [10]. In order to have sustainable environment and prosperity it is thereby recommended that they should rely on Smart Grids.

C. Smart Meter

Smart meter is a sort of energy meter that is environment friendly and it is used in order to measure the electrical energy in units of kWh (Kilowatt-hour). It is a smart device that facilitate and benefit the customers who want to have control on their energy consumption and electricity bill. It is one of the devices that belongs to the Advanced Meter Infrastructure which are responsible to send the readings of meter to the utility and also to the consumer. Below is a picture of a typical Smart Energy Meter.

Fig.2 Smart Energy Meter [11].

Smart energy meter will provide accurate data of units consumed along with other advantages of being smart. It has the capacity to save the energy consumption on the basis of hour or less. Smart meter has got other features too like non-volatile storage of data, connect and disconnect facility from a remote station, can detect tampering, and have the facility of bi-directional communication. They can send the collected data to a central meter. This central meter then supervises the working of smart meter. From an operational viewpoint, the installation of smart meter will improve the management and control on the grid [12]. Some benefits of the smart energy meter are given below:

- Operational cost is low.
- It saves the time of both consumers and providers by sending back the reading to the utility provider.
- One can enable the online payment of bill.
- One can greatly decrease the consumption of power during the high peaks [13].

These smart devices have the feature to sense the internally generated consumption of power by residents. Energy utilities get an insight through accurate readings of the meter so that the customs of habitants using the energy can be changed accordingly. Eventually, all the functions of a smart meter will help both the consumer and utility in an efficient way.

D. Power Consumption

Power consumption is that amount of total power that is utilized by the residential appliances of a consumer. The power consumption is one of the important feature of electricity supply. People must be aware and attempt to preserve energy for the future.

Published By:
Blue Eyes Intelligence Engineering
and Sciences Publication (BEIESP)

Due to the constant use of electricity, the energy pattern has been varying slowly. The causes of alteration in the pattern of consumption is due to the weather conditions or due to the irrelevant use of power by residents like excessive use of appliances and careless behavior in utilization of power like switching on the lights and TV while not watching it. These factors may seem minor to the user but these have a great impact on the users. As the power being supplied by the provider is vast so most of the people do not consider the preservation of energy.

There is a declining trend in the mindset of providers about the value of energy consumption. Therefore, utilities should play a vital role in the promotion of Smart Energy meters and make sure the participation of people in reducing the overuse of energy by letting them know about effect of their current usage of electricity.

E. Consumer Behavior

To know the consumption of an appliance in the household of a consumer is known as consumer's behavior. In a case when a consumer has high consumption of energy then we can conclude that a huge number of device has been used, meaning that there is a direct relation between the cost and product of used appliance and the time for which it has been used. It is vital for energy providers to fulfill the expectations of the consumers. In most of the cases they are relying on the monthly bill. They really do not know that which appliance has high consumption of energy and how the management of consumption can be made better. These are the factors that is having a vital role to influence the customer's behavior. To better understand the behavior of the people it is necessary to analyze how the energy is being used. There should be a smart way to influence the consumer whenever they access the appliances [14]. In the figure below an installed smart meter is illustrated to measure the consumption by the appliances.

Fig.3 Smart Meter installed for the measurement of electrical appliances in a house [15]

F. Surveying the Related Work

In this section, we are going to study the existing work in terms of socio-economic and technological issues.

Socio-economic issues:

In communication market, the service providers have gained the satisfaction of the customers by providing their services. The people's response about the implementation of Smart Metering System is discussed in [14]. One can view real-time consumption of electric energy, switching On and OFF of appliances, to estimate upcoming bill and getting messages directly from service provider. In this paper, the pattern of consumption during the day time and also on weekends are discussed.

In different countries, a survey has performed on households and feedbacks from consumers have been obtained in order to motivate the people and make them energy-conscious. A socio-technical review was performed for the promotion of consumption of sustainable energy while using Smart Energy Meters.

In [16], the results of a survey are presented. This survey was quantitative and was performed on various consumers. In this survey Technology Acceptance Model (TAM), which is a theoretical framework is suggested for the views of household about the Smart devices.

Technological Issues:

There are different ways in which household appliances are connected with the energy meter. These different ways include wireless connection, dedicated line, power line communication and communication that is web-based [17]. A secure scenario is one in which the meter is connected to the data-center. Whenever there is connection between the smart meter and mobile phone then one can observe the power consumption of a device after it is turned ON or OFF [18]. The research paper, [19] explain each and everything related to smart meter in Netherlands whether it is installation functionality or implementations.

Smart Metering includes the installations of few smart meters that regularly monitors and sends the feedback related to data to the consumer. By the usage of smart meters consumers will get energy that will be safe, secure and cheap, the emission of carbon monoxide will also be reduced [20].

In order to control the capacity of transmission for the smart appliances the architecture is presented for Smart Energy Management System [21]. They have created a table for different parameters like energy prices, consumption and cost of energy. The energy cost for each and every appliance have been shown pictorially.

A research paper is presented in [22], in order to review the significance of Smart metering by taking customers and business aspects into consideration. Here the advantages of smart meters are compared with those of mechanical meters. To have a society that is energy efficient, there must be awareness among the consumers about the energy consumption. Different feedbacks, thus were suggested for saving energy and the improvement of energy efficiency. In [13], there is discussion about the smart meters in Hungary. Such meters have got bi-directional feature, one is for tariff and the other one is for remote control. Different communication protocols have been addressed like ZigBee, Home Area Network and Wi-Max.

IV. Materials and Methodology

A. Planning of the Project

In performing a project, planning plays a key role so that it can be accomplished in a smooth and structured way. Project planning shows the flow of the project from the very first beginning. This project has been divided in 6 phases.

First phase of the project planning is the selection of the project. This step is completed after studying the previous study and after that the selection of main aim and topic was performed. Among too many research fields one topic will be selected as a project.

Published By:
Blue Eyes Intelligence Engineering
and Sciences Publication (BEIESP)

Then there will be a presentation of the project to the concerned supervisor and after the successful presentation the topic will be finalized as a project.
After the selection of the project topic planning will be shifted to the second phase. This phase is about the survey related to the selected project. This phase is more focused on the review of others work. For this project, journal was studied which is one of the major resources, and literature was reviewed to get further information related to the project. In parallel with all this study the components used in this project are studied to know that whether these are available and suitable.

In this project, Arduino microcontroller have been used as main processor unit. For the purpose of wireless communication GSM has been selected. Other components include current sensor, transformers, regulator and other passive components.
Phase 3 is about the designing of circuit and to program Arduino microcontroller.
After the programming of microcontroller next stage is the interfacing of electronic components to the microcontroller. This is the crucial step of the project planning as the functionality of the project depends upon this step and to avoid any sort of issue precautions should be considered.
Now it's the turn of 5th phase which includes the testing of the project on practical Arduino microcontroller. For any sort of problem troubleshooting will be performed.
The last step is to finalize the project if it is in working condition and will be presented to the supervisor.

B. Project Description

The main idea of this project revolves around the energy management by the user. How the user will manage his energy consumption? It is only possible when he knows how much is his requirement and how much he is consuming. So, in this project we have designed such a prototype that will measure the energy consumption of a user and one can set a threshold value of energy upon exceeding of which an alert in the form of message will be sent to both the user and service provider. This will be beneficial for the user in the sense that will become aware of how much energy he is consuming so it will be possible for him that which appliance should be switched off to make the energy consumption normal. For the service provider, it is also helpful for finding any short circuit like if they are getting message continuously.
In order to design this prototype, we have used Arduino microcontroller whose purpose is to process like the energy measurement, displaying of load on LCD, switching of relay and communication of GSM all these are performed by microcontroller.
Below is the block diagram of our project.

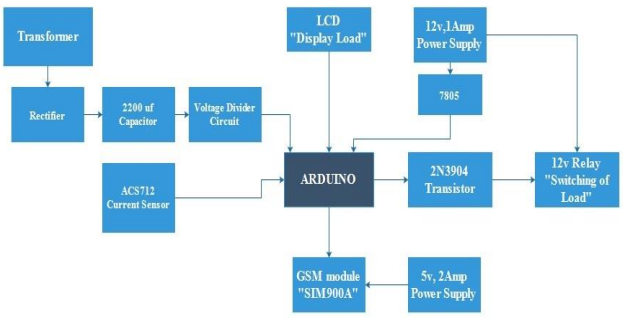

Fig.4 Block Diagram of the Project.

C. Components Used

Before going to implement the circuit into practical hardware it is vital to study the components before buying. It is also important whether the components are suitable for the specific function or not so to avoid further failure. The components which are used in this project includes Arduino Uno, Current Sensor ACS712, GSM module, LCD and other passive components.

Arduino Uno

Microcontroller is such a handy device that works according to the commands of the user. There is a huge variety of microcontrollers but the selection for a specific project depends upon the requirement of the user so that one can program easily.
Each and every microcontroller have their own pros and cons and use different languages for programming. After surveying different microcontroller, we have selected Arduino Uno to be used in our project as it is economical, available and suitable. For the interfacing of these hardware we have used the input and output pins of Arduino microcontroller.

Energy Meter

It is a tool that is used for the measurement of energy consumption by the user. Actually, the calibration of energy meter is done in kilowatt hour (kWh). The two main categories of energy meter are analog and digital. Analog meter is conventional and nowadays obsolete, instead of this digital meter is used for energy consumption measurement because of accurate result and it has eliminated the parallax error. On the other hand, it has benefit for personnel too in terms of taking readings easily. This project has been designed for digital energy meter.

GSM Module

In this project as we have explained that consumer and the service provider will be informed about the energy consumption whenever the threshold value of energy is exceeded. So, for this purpose we have used Global System for Mobile communication (GSM). GSM is a standard for wireless communication and one can send data through this in the form of SMS. GSM has been selected for communication due to the following advantages.

1. It is responsive.
2. It is economical.
3. Data is sent in encrypted form thus secure.
4. It is efficient.

There are various types of GSM modems each having different frequency of operation and it depends upon the residing country. Here in this project we have selected GSM900A GSM module whose operating frequencies are 900MHz and 1900Mhz which is compatible with our network. It is used for the purpose of sending message from the hardware we have designed to the consumer and the service provider. Below is the figure of GSM modem which we have used.

Published By:
Blue Eyes Intelligence Engineering
and Sciences Publication (BEIESP)

Fig.5 GSM 900A module.

Birth of SMS

SMS stands for Short Messaging Service which is just like paging but SMS does not have the restriction that phone will be active and inside the range. One can send SMS to a user whether it lie in the same cell or roaming outside in other cells.

SMS is a technology through which one can send information in the form of text message among mobile phones. Information in text may be in the form of words, numbers or it may be in the form of alphanumeric symbols. For the first-time SMS was used introduced in the first phase of GSM and it is believed that first short message was sent in DEC, 1992 and it was from PC to a cell phone and the network was UK's Vodafone GSM. The maximum length of a short message is 160 characters.

SMS is a service that is first stored and then forwarded. It means that there is not any sort of direct transmission of messages between transmitter and receiver but it is first stored at SMS center and then sent to the receiver end. Each and every provider which provide the service of GSM has a single or multiple dedicated center for SMS.

SMS has the feature of delivery. In paging, there was no delivery report and one was unaware that whether the message has been delivered or not. In SMS technology, there is this feature where the sender will be notified in the form of delivery report that whether the message has been received or pending.

There are various ways of sending SMS. One can concatenate several messages in to a single one and can compress information having size of 160 characters.

Modes of SMS

One can use GSM voice or GSM data in order to receive and send SMS at the same time. It is possible due to the fact that whether it is voice or data call, these are transferred over the radio channel. While on the other hand SMS do not use radio channel instead it uses the signaling path. Due to this property, there is less probability of SMS failing due to network engagement. One can also get an SMS while having a call.

In order to avail the service of SMS, one will have to subscribe it and also to a hardware, one will have to subscribe a network that can support the service of SMS. For the user the operators will activate the service of SMS.

Advantages of GSM

1. Dute to its authenitication of message it is considered as responsive.
2. It is uqbiquitous i.e. its coverage is nowadays everywhere.
3. GSM is economical and anybody can afford it easily.
4. It is secure due to encryption.

LCD

There are different ways for the display of information like one can use seven sigment display and one can also use Liquid Crystal Diplay. Here we have used LCD for the display of how much load a consumer is using right now. Through the use of LCD one knows the data that has been processed by the microcontroller and the user can get the required output from the hardware on the LCD. The programmer can also get help from it by checking the output of the program at that moment whether the code is correct or not. There are different sort of LCD and one can get upon their requirments. Here we have used 20*4 LCD i.e. it has 20 columns and two rows. It has been shown in the figure below.

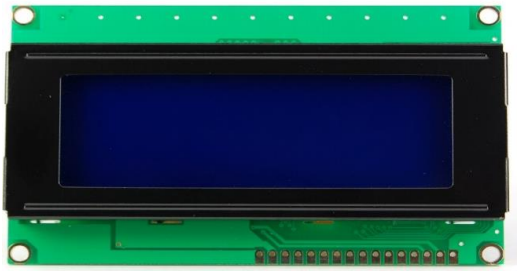

Fig.6 20 x 4 LCD.

D. Designing of Three Phase Smart Energy Meter

In this project, main aim is to design a three-phase energy meter which is not a conventional energy meter but it is a smart. Smart in a way that it has got the facility to communicate with the user. The communication between the energy meter and the user is done through GSM communication. GSM standard has the technology of SMS so we have used this technology for communication. This whole project revolves around the load management like how a user can be informed about his energy consumption and how it is controlled whenever there is over consumption of energy. The main idea is that in this project three-phase system is considered and for each and every phase energy consumption is calculated. After the energy calculation, a specific limit for each phase is defined i.e. whenever that specific pre-defined limit is exceeded then the user will be informed in the form of message that for your specific phase the energy consumption has exceeded the limit. The user will not only get a message for each phase but the load on that phase will trip. After getting message, the user will manage the load and once the load is below that specific limit then the switch will close and the user will get mains supply for that specific phase. In this way, the user will get information about his consumption and will be able to reduce it which was not possible in the earlier energy meter.

1) Power Calculation

In order to manage the energy consumption first we will have to measure the power and after that management is performed. First, we are going to measure the current and voltage for each and every phase so that power can be calculated. Below is given in detail how we have calculated different parameters.

Published By:
Blue Eyes Intelligence Engineering
and Sciences Publication (BEIESP)

Current Measurement

In order to measure the current for each phase a current sensor i.e. ACS712 has been used. It is connected in series with each phase. This sensor gives quite precise readings of the AC current. It comes in different ratings i.e. 5A, 20A and 30A. The one which we have used is 30 amperes. It is compatible with microcontrollers like PIC, ATMEL and ARDUINO.

ACS712 works under the principle of Hall effect named after Dr. Edwin Hall, discovered it in 1879. This principle states that when a conductor that carries current is placed in a magnetic field, a voltage is produced at its edges which is perpendicular to the direction of current and magnetic field. In the figure below it is illustrated in detail.

A thin sheet of semiconductor which is called Hall element carries current (I) is placed in a magnetic field (B). Magnetic field is perpendicular to the direction of current flowing in the sheet. Lorentz force will distribute the current in the sheet and it will be no more uniform due to which potential difference is created across the edges of the semiconductor sheet and it is perpendicular to the direction of current and field. This generated voltage is known as Hall voltage and is in microvolts. The Hall voltage has a direct relation with the magnitudes of both the current and magnetic field. If one of them is known then the Hall voltage can be used to find another.

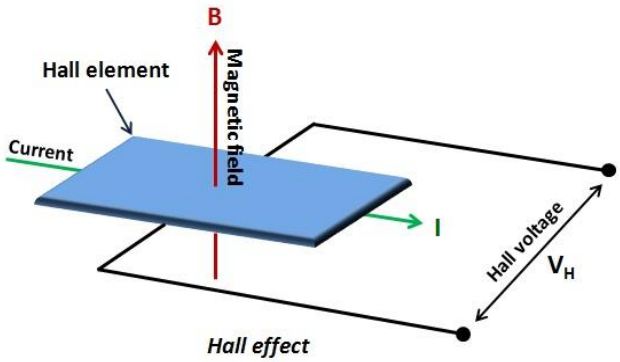

Fig.7 Hall Effect Principle

This sensor is provided in a small, surface mount SOIC8 package. This package contains a precise, low-offset and linear Hall sensor circuit that has a copper conduction path which is located near the surface of the dye. When the current flows through the copper conductor it will produce a magnetic field that is sensed by the built-in Hall element. The magnetic field strength is directly proportional to the magnitude of the current through the path of conduction which gives a linear relationship between the output Hall voltage and input conduction current. The IC package also includes an on-chip signal conditioner and a filter circuit that stabilizes and enhances the generated Hall voltage up to a level that can be easily measured by the ADC channel of microcontroller.

Connection with ARDUINO

This sensor has three pins that must be connected with ARDUINO, out of these three two pins are used for the power supply and one is used for its analog output. It has two inputs through which current is measured. Across these two pins load is connected through which current is going to be measured. The following figure will illustrate the pinouts of this sensor.

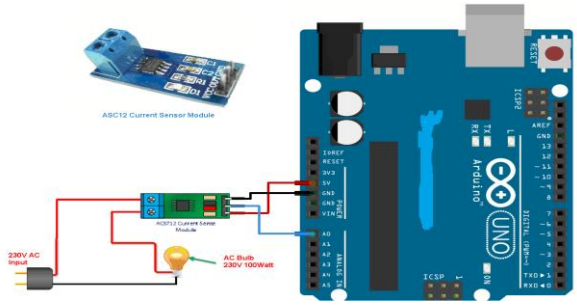

Fig.8 Pin outs and connection of ACS712 with ARDUINO

In this project, this sensor is used for the current measurement across all the three phases. Three current sensors are used in this project and connected to the ARDUINO. As theses sensors gives analog output so these are connected to the analog pins of the ARDUINO. A0 pin is used to get the current from phase I, output of phase II is connected to A3 while the output of phase III current sensor is given to the A5 analog pin of ARDUNO. These values of current measured through ACS712 are stored as variables that are defined in programming.

Voltage Measurement

As we have already discussed that for measuring power we will have to find current and voltage so we have used ACS712 sensor for current measurement while now we are going to measure the voltage for each and every phase. The block diagram of the voltage measurement is given below.

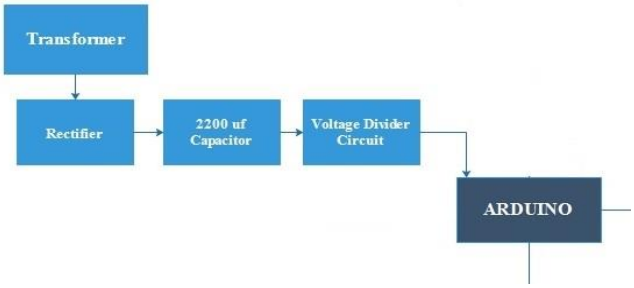

Fig.9 Block Diagram of Voltage Measurement Circuit

Transformer

The function of transformer is to stepdown the mains voltage so that the microcontroller can measure it. So, for this purpose we have used 220-12Vac transformer. For each phase, we have used a separate transformer.

Bridge Rectifier

The output of transformer is fed into the rectifier section in order to convert AC power to DC power. It is necessary because we know that a microcontroller cannot measure AC signal and for that purpose we will have to convert it into DC signal. For conversion of AC into DC power we have used bridge rectifier for each phase.

Filter

As we know that the output of rectifier is not a pure DC signal but it is a pulsating DC. In order to get a pure DC signal, we have used capacitor whose function here is to give almost pure DC voltage.

Published By:
Blue Eyes Intelligence Engineering
and Sciences Publication (BEIESP)

Voltage Divider Circuit

The output of filter is in between 13V and 15V DC which cannot be given to microcontroller as it can measure voltage not more than 5V DC. In order, to give 5V to the microcontroller we have used a series combination of resistors. The output of this circuit is almost 5V which is given to the analog pin of ARDUINO.

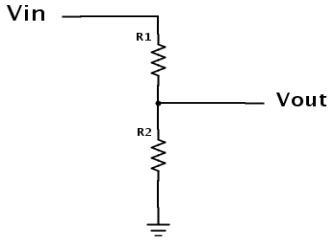

Fig.10 Voltage Divider Circuit

In our project R1=2k Ω, R2= 1k Ω, V_{in}=15V and V_{out} =5V.

Calibration

Through the above circuit we have converted 220V ac to 5V DC so that ARDUINO can measure it. In order to display measured AC voltage, we have done calibration.

1023----------220

Any other---------- x

x = (220/1023) * any other.

This "x" is AC voltage that is going to be displayed on LCD.

E. Opening of Relay

In this project, the idea was that if on a specific phase a specific limit of load is exceeded then the phase should open and load need to be trip. So, for this purpose we have set a limit of load i.e. 190 Watts, so whenever this is crossed the relay will open and will stop the mains to the load. At the same time, a message will be sent to the user that "system overload (Phase 1)". We have used three relays for each and every phase and the limit for all the phases is 190 Watts. This threshold value is just for testing the hardware and it can be changed to any value and anytime.

A relay is a special type of switch that is ON and OFF by an electromagnet. Whenever a small amount of current flows through the coil of an electromagnet it excites the coil and a magnetic field is set around it which attracts an iron armature. This armature is moveable and moves according to the excitation of coil. Through a relay one can control a heavy load just by using small current.

In this project, we have used 12v relays which means that the coil will excite with 12V DC. For this purpose, we have used a separate 12V DC supply. Alongwith this power supply we have used transistor 2N3904 for the purpose of switching and it also amplify the output current of microcontroller which is 20mA. This current is not enough to excite the coil of a relay so we have used transistor to amplify the current. The figure below shows the connection of transistor with a relay, and in this way, we have used in our project for all the three phases.

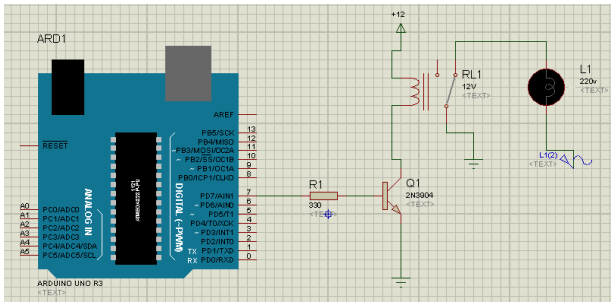

Fig.11 Interfacing of Relay with ARDUINO through 2N3904.

Digital pin 7 is used for phase I, digital pin 6 for phase II while pin 5 is used for phase III.

F. Reclosing of Relay

We have discussed earlier that there is a specific pre-defined limit of load for each phase, means that whenever that amount of load is exceeded by the user then the relay will open and a message must be sent to the user.

Now when the relay is open and the user has managed his load, so it is necessary that after managing load the relay must be closed so that the user gets the mains supply. For each phase, we have used different techniques for reclosing.

For phase I we have used a touch button, this button is connected to a digital pin 4 of ARDUINO. When a user press this button so it will make the pin 7 high which is connected to phase I relay and relay will be closed.

In phase II we have used an auto reclose technique which means that when load at phase II is trip and relay is open. So, after a delay of minute it will reclose automatically.

Phase III is smarter than first two in a way that when load exceeds the limit so the user will get a message that contains "ALERT! Manage your load" but the relay will not open and load will not trip. There will be a delay of two minutes, so if the user manages his load with in this time interval then the relay will not open otherwise after two minutes relay will open. And the relay will reclose once the load is reduced than that pre-defined limit.

G. Circuit Diagram.

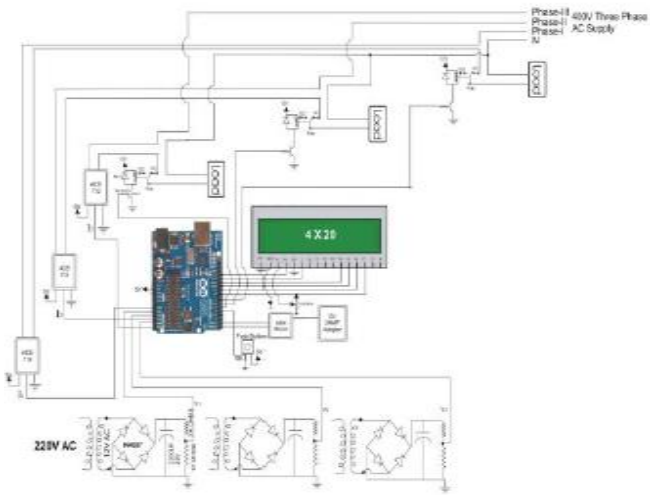

Fig.12 Circuit Diagram of Smart Energy Meter (For Three Phase AC Supply System).

Published By:
Blue Eyes Intelligence Engineering
and Sciences Publication (BEIESP)

H. Project Flowchart

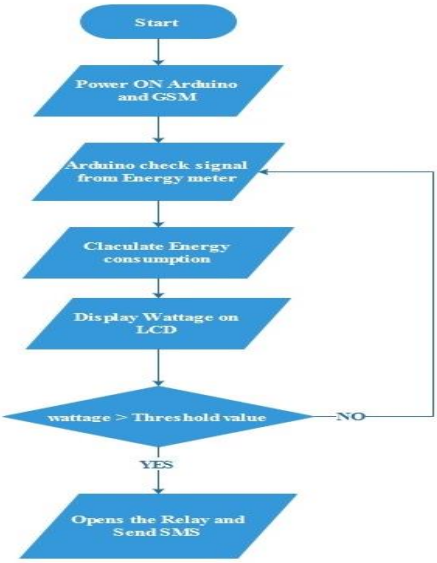

Fig.13 Project Flowchart

V. RESULTS AND DISCUSSIONS

A. Programming Output

In order to program Arduino microcoontroller we have used Arduino IDE which is the compiler specially designed for arduino microcontroller.

Defining A Library

In our project, besides Arduino we have used other components too like LCD, GSM module and ACS712 current sensor. For their proper functionality, it is necessary that we should add their libraries first. We have also declared some of the variables and have initialized them. In the figure 14 we have shown that portion of the code in which we have declared different libraries.

```
sketch_may17a

#include <LiquidCrystal.h>
#include <GSM.h>

#define PINNUMBER ""

// initialize the library instance
GSM gsmAccess;
GSM_SMS sms;
LiquidCrystal lcd(13, 12, 11, 10, 9, 8);
```

Fig.14 Declaration of libraries.

Void Setup

This portion of the code is executed by the microcontroller only once after the compilation and loading to microcontroller. When it is successfully compiled and loaded to the microcontroller it is executed just a single time so here normally those settings are performed which needs only one time declaration like here we have declared input and output pins.

```
sketch_may17a

{
  lcd.begin(20, 4);
  lcd.setCursor(0,0);
  lcd.print("...WAIT...");
  pinMode(A1,INPUT);
  pinMode(A2,INPUT);
  pinMode(A0,INPUT);
  pinMode(A3,INPUT);
  pinMode(A4,INPUT);
  pinMode(7,OUTPUT);
  pinMode(6,OUTPUT);
  pinMode(5,OUTPUT);
  digitalWrite(7,LOW);
  digitalWrite(6,LOW);
  digitalWrite(5,LOW);
  Serial.begin(9600);
```

Fig.15 Declaration of pins as inputs and outputs.

GSM Code

We have used GSM communication on our project so that the consumer is informed in the form of text message whenever the load consumption exceeds the threshold valve. Here the maximum is any watts and we have set the threshold value as 190 watts. For GSM to work properly we have added GSM library and some other code which is given below.

```
sketch_apr06a §

#include <GSM.h>
GSM gsmAccess;
GSM_SMS sms;
void setup() {
  pinMode(4,INPUT);
  while (notConnected) {
  if (gsmAccess.begin(PINNUMBER) == GSM_READY) {
    notConnected = false;
  } else {
    //delay(1000);
  }
 }
}

void loop()
{
   if(threshold < loadWatts){
```

Fig.16 GSM communication program.

Load Calculation Code

In order to find the power for each and every phase we will have to find the current and voltage so we have done that through current sensor and voltage sensor. Now, power for each phase will be calculated through microcontroller by a pre-defined formula of power.

Published By:
Blue Eyes Intelligence Engineering
and Sciences Publication (BEIESP)

```
sketch_may17a
88   delay(100);
89   Voltage = getVPP();
90   VRMS = (Voltage/2.0) *0.707;  //root 2 is 0.707
91   AmpsRMS = (double)(VRMS * 1000)/mVperAmp;
92   p1=v1*AmpsRMS;
93
94   delay(100);
95   Voltage2 = getVPP2();
96   VRMS2 = (double)(Voltage2/2.0) *0.707;  //root 2 is 0.707
97   AmpsRMS2 = ((double)(VRMS2 * 1000)/mVperAmp2)*8;
98
99   delay(100);
100  vsensor2=analogRead(A2);
101 v2=(215/455.0)*vsensor2;
102  p2=v2*AmpsRMS2;
103
104  vsensor3=analogRead(A4);
105  v3=(215.0/1023.0)*vsensor3;
106  Voltage3 = getVPP3();
107  VRMS3 = (Voltage3/2.0) *0.707;  //root 2 is 0.707
108  AmpsRMS3 = (VRMS3 * 1000)/mVperAmp3;
109  int p3=v3*AmpsRMS3;
```

Fig.17 Calculation of load from LED blinking.

B. Designed Hardware

In this section we are going to demonstrate the real hardware which we have designed in order to accomplish our task of tripping off the load whenever the threshold is exceeded and message will be send to two different cell phones.

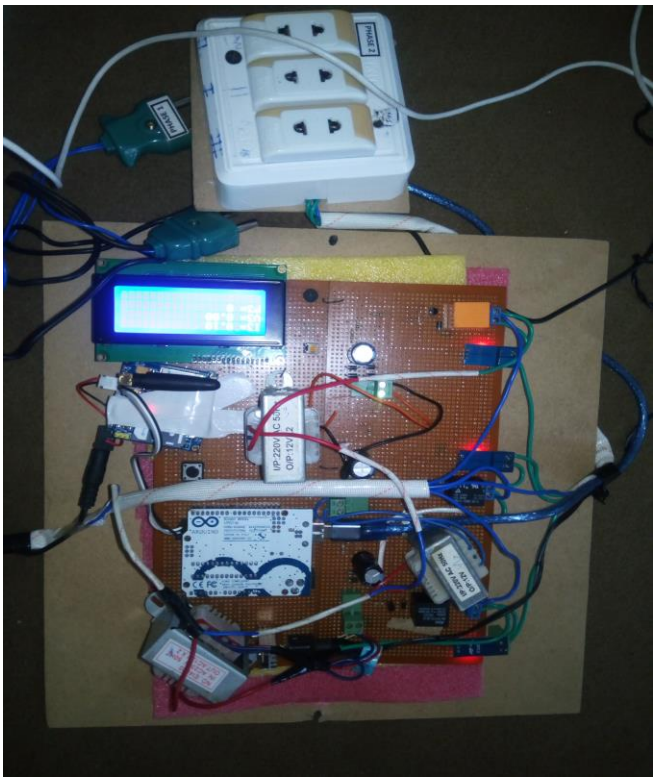

Fig.18 Overall designed hardware of the project.

C. Discussion

In this project we started with a proposed technique of energy management from the user perspective so that how one can aware the user from the energy management so that he can manage his load and can decrease the bill and also take part in the energy saving. So first we studied different components that are needed for this project, selected a microcontroller that is economical and fulfill the requirements of our project. ARDUINO UNO is used for this purpose and it is programmed in C language, using Arduino IDE software as compiler and successfully compiled our code and then it was successfully loaded to microcontroller. We interfaced different electronic components like GSM, ACS712 and Relays to the Arduino on veero board and tested our hardware. Current and voltage are measured for all the three phases and power is calculated according which management of load take place. Whenever the predefined threshold value was exceeded a message was send to the user displaying "System Overlaod". For each phase, different technique of reclosing is used, Phase I is reclosed by pressing a button, Phase II reclosed after a delay of one minute while phase III will reclose upon decreasing the load.

REFERENCES

1. Rahman, Masudur, M. Ohidul Islam, and S.Salakin. (2015). "Arduino and GSM Based Smart Energy Meter for Advanced Metering and Billing System." 2nd Int"l Conf. on Electrical Engineering and Information & Communication Technology (ICEEICT), Jahangimagar University, Dhaka 1342, Bangladesh, 2015, p-p 1-6.
2. Bharath, P., N. Ananth, S. Vijetha, and Prakash K V Jyothi. (2008). "Wireless Automated Digital Energy Meter." IEEE International Conference on Sustainable Energy Technologies, (ICSET), India, 2008, p-p 564–67.
3. Ashna, K., and Sudhish N. George. (2013). "GSM Based Automatic Energy Meter Reading System with Instant Billing." Proceedings - 2013 IEEE International Multi Conference on Automation, Computing, Control, Communication and Compressed Sensing, iMac4s, National Institute of Technology, Calicut, India, 2013, p-p 65–71.
4. Tan, H.G.R., C.H.R. Lee, and V.H. Mok. (2007), "Automatic Power Meter Reading System Using GSM Network." 2007 International Power Engineering Conference (IPEC), Singapore, 2007, p-p 465–469.
5. Electricity tariff schedule, Retrieved on February 18, 2016, fromhttps://www.tnb.com.my/assets/files/tariff_rate_final_01.jan.2014.
6. Arif, A., Al-Hussain, M., Al-Mutairi, N., Al-Ammar, E., Khan, Y., & Malik, N. (2013). "Experimental Study and Design of Smart Energy Meter for the Smart Grid." 2013 International Renewable and Sustainable Energy Conference (IRSEC), King Saud University, Riyadh, Saudi Arabia, 2013, p-p 515–520.
7. http://www.watthourmeters.com/history.html.
8. http://matrix.dte.us.es/grupotais/images/articulos/berhanu_itrevolutions.pdf
9. J. L. Carr, "Recent developments in electricity meters, with particular reference to those for special purposes," in Journal of the Institution of Electrical Engineers, vol. 67, no. 391, pp. 859-880, Apr. 1929.
10. M. R. Hossain, A. M. Thanand A. B. M. Shawkat Ali, "Evolution of Smart grid and some pertinent issues," in 20th Australasian Universities Power Engineering Conference (AUPEC), 2010, pp.1-6.
11. http://www.dlms.com/productsandservices/microtech-industriespvtlimited-pakistan.html
12. L. O. AlAbdulkarim and Z. Lukszo, ―Smart Metering for the future energy systems in the Netherlands, in Fourth International Conference on Critical Infrastructures, 2009, pp. 1–7.
13. P. K. Bhowmik, A. Paul, "Remote detection of illegal electricity usage employing smart energy meter - A current based technique," in Innovative Smart Grid Technologies, India, 2011, pp. 391-395.
14. F. Livgard, "Electricity customers' attitudes towards Smart Metering," in IEEE International Symposium on Industrial Electronics (ISIE), July. 2010, pp. 2519-2523.
15. http://www.Smartgrid.gov/the_Smart_grid#Smart_home
16. J. Stragier, L. Hauttekeete, L. De Marez, "Introducing Smart grids in residential contexts: Consumers' perception of Smart household appliances," in IEEE Conference on Innovative Technologies for an Efficient and Reliable Electricity Supply (CITRES), Sept. 2010, pp.135-142.

Published By:
Blue Eyes Intelligence Engineering and Sciences Publication (BEIESP)

17. Benzi, N. Anglani, E. Bassi, and L. Frosini, ―Electricity Smart Meters Interfacing the Households, IEEE Transactions on Industrial Electronics, vol. 58, no. 10, Oct. 2011, pp. 4487–4494.
18. J. M. Bohli, C. Sorge, and O. Ugus, ―A Privacy Model for Smart Metering, in IEEE International Conference on Communications Workshops (ICC), 2010, pp. 1–5.
19. L. O. AlAbdulkarim and Z. Lukszo, ―Smart Metering for the future energy systems in the Netherlands, in Fourth International Conference on Critical Infrastructures, 2009, pp. 1–7.
20. S. Ahmad, ―Smart Metering and home automation solutions for the next decade, in International Conference on Emerging Trends in Networks and Computer Communications (ETNCC), 2011, pp. 200–204.
21. D. Y. R. Nagesh, J. V. V. Krishna and S. S. Tulasiram, ―A Real-Time Architecture for Smart Energy Management, in Innovative Smart Grid Technologies (ISGT), Jan. 2010, pp. 1-4.
22. Deconinck, B. Delvaux, K. De Craemer, Z. Qiu and R. Belmans, ―Smart Meters from the angles of consumer protection and public service obligations, in Intelligent System Application to Power Systems (ISAP), 2011, pp.1-6.
23. https://www.elprocus.com
24. http:// www.electronics-tutorials. ws/waveforms /555_ timer .html

AUTHOR PROFILE

Naeem Javed received his B-Tech (Honours) Degree in Electrical Technology from Sarhad University of Science & Information Technology, Peshawar in 2011 and M.Sc. Electrical Engineering Degree from COMSATS Institute of Information Technology Islamaabad in 2017. Currently working as a lecturer in Chakdara Polytechnic Institute, Chakdara, Lower Dir KPK.

Muhammad Aamir Shafi received his B.Sc Electrical Engineering degree from Bahauddin Zakaria University, Multan in 2011 and M.Sc. Electrical Engineering degree from COMSATS Institute of Information Technology Islamabad in 2016. Currently he is PhD Scholor in High Voltage from Comsats Institute of Information Technology, (Atd) Islamabad. He is also working as a Lecturer in COMWAVE Institute of Information and Technology (Atd) Islamabad. His research interests include renewable energy system design and integration with power system, Energy management system design Protection and Control and High Voltage Technology.

Dr Nasrullah Khan joined Comsats Institute of Information Technology Islamabad as Foreign Faculty Professor in 2006. After end of HEC FFHS in 2014, he continued as contract professor in CIIT. In last nine years he has published 13 research papers in impact factor journals, 16 in Non-Impact factor international journals and 23 papers in international and local conferences. He has written seven books on lightning, universe, extremism and sustainable energy alternatives in Urdu. He is senior member of IEEE (USA) and lifetime member of PEC (Pak). He evaluates HEC proposals, international journals and conferences papers. He is member of BOS (CIIT), PIEAS (BOS), MUST (BOS), BOF (CIIT) and CIIT Academic Council.

Mohsin Khan Completed B.S Electronics Engineering from UET, Peshawar in 2011 and got M.S Degree in Electrical Communication from UET, Peshawar in 2016. Working in Chakdara Polytechnic Institute, Chakdara as a Lecturer since Aug, 2015.

Published By:
Blue Eyes Intelligence Engineering
and Sciences Publication (BEIESP)