International Journal of Engineering and Advanced Technology (IJEAT)
ISSN: 2249-8958 (Online), Volume-5 Issue-4, April 2016

Breathing Sensor Operated Wheel Chair for Paralyzed Persons

Kavita Burse, Subrato Howlader, Prateek Wankhade

Abstract: ***The proposed breathing sensor based wheel chair (BSWC) can be controlled using breathing commands. Therefore a 'disabled' person can control the BSCWC by himself. Computer input system with breathing commands does not work in real time bases. Moreover it is not robust against various background noises and vibrations. Through experiment it is found that the proposed BSWC is robust against the above mentioned influencing factors. Moreover it is confirmed that the proposed BSWC can be controlled by breathing accurately and safely. The proposed research is a computer controlled wheel chair where sensor and intelligent control algorithm have been used to minimize the level of human intervention.***

Keywords: BSWC, breathing sensor, wheel chair, paralysis

I. INTRODUCTION

The existing computer input device such as a keyboard, mouse and the other input devices have been used to interact with the digital instruments. These computer input devices cannot be controlled by handicapped or a paralyzed person. In this paper a microcontroller (MC) controlled breathing sensor based device for paralyzed persons is proposed. The aim of this project is to use wheel chair automatically for moving forward, backward, left and right. The overall framework of this project is to restore autonomy to severely disabled people by helping them. Use independently a power wheel chair fitted with breathing sensor, obstacle sensor and a computer to help paralyzed person achieve some independent mobility. By issuing breathing command the chair can be moved in four different directions. Obstacle in the way can be sensed by the wheel chair and it will stop automatically. The paralyzed person can take advantage of the technological evolution, in order to increase the quality of life and facilitate their integration into the working world. The project breathing sensor operated wheel chair works on the principle of pressure and temperature changes made while breathing. The changes in pressure and temperature are calibrated and further signals are digitized to provide input to the microcomputer. The microcomputer further controls the navigation of wheel chair.

Manuscript published on 30 April 2016.
***** Correspondence Author (s)

Dr. Kavita Burse, Professor, Department of Electronics & Communication, Oriental Institute of Science and Technology, Bhopal (Madhya Pradesh). India.

Mr. Subrato Howlader, Assistant Professor, Department of Electronics & Communication, Oriental Institute of Science and Technology, Bhopal (Madhya Pradesh). India.

Mr. Prateek Wankhade, Assistant Professor, Department of Electronics & Communication, Oriental Institute of Science and Technology, Bhopal (Madhya Pradesh). India.

The breathing sensor based wheel chair can be used for different areas such as communication, medical centers, control of different home appliances etc. Electrical chair is very common in daily life of disabled, Paralyzed or elderly people. Breathing sensor based wheel chair would be a great invention for disabled or paralyzed people. Many people who require wheel chair would find breathing sensor based wheel chair more beneficial than heavy manual wheel chair. This wheel chair has proven to be more beneficial for paralyzed peoples who cannot use their hands or any other body part to move wheel chair. Paralyzed persons cannot move their body parts but can breathe. By putting a breathing sensor near nostrils a paralyzed person can handle the navigation of wheel chair, which decreases the dependency of paralyzed peoples on their family members as they can even control home appliances. BSWC can improve the life chances of disabled or paralyzed persons. Conventional wheel chair costs marginally less as compared to the breathing sensor operated wheel chair. Although the approach is to reduce the overall cost of the wheel chair but still BSWC is somewhat costlier as compared to other electrical or power wheel chairs. As BSWC has its own benefits over the other electrical chairs, which further can turn into its advantage. A disabled or a paralyzed person can easily understand the functioning of the wheel chair with the help of medical representative. These peoples can make user understand functioning of the wheel chair very patiently.

II. LITERATURE REVIEW

A wheel chair is a device which can increase the mobility of disabled or paralyzed persons. Wheel chair movement can be either manual (By turning the wheels by hand) or electrical. Today wheel chairs are used not only for mobility but also as a way to allow a user to express their individuality. Researchers have done great innovations in the field of wheel chairs to relieve disabled peoples. In [1] Shaik Meeravali, M. Aparna proposed the design of a hand-glove controlled wheel chair based on MEMS. In this project a prototype of an affordable and technologically advanced wheelchair was designed and developed. The proposed prototype was communicating wirelessly between the controller and the plant. The movement of the fingers is sensed by MEMS sensors placed inside the glove. The controller sends the signals to the receiver section which is placed under the wheelchair wirelessly. When signal is received by the receiver motor rotates and further wheels moves accordingly. Rakhi A.

Published By:
Blue Eyes Intelligence Engineering and Sciences Publication (BEIESP)

Kalantri, D.K. Chitre in [2] proposed an automatic wheel chair using gesture recognition. This project basically works on the principle of acceleration, one acceleration sensor, provides two axis, acceleration sensors whose output varies according to acceleration applied to it, by applying simple formula we calculate the amount of tilt and output of tilt will decide to move in which direction. On chair obstacle sensors was installed. Total 4 sensors were installed for detection of wall/obstacle in the forward, backward, left and right direction. In [3] Pradeep Kumar Rattewal, Parteek Kumar designed the intelligent wheelchair prototype. The code for the wheelchair system is written in IDE Keil software version 3 using assembly language programming. The proposed design of wheelchair is composed of 9 sensors. It also includes the speech recognition sensor, and pins of 89S52 microcontroller with the wheelchair. The data from the sensor and the command from the user is converted into digital format and fed to microcontroller and scientific inference module takes the decision based on the received data bits. The sensors are continuously updating the data while the wheel chair is moving or at rest then according to the data bits motor driver drives the motor. Wheel chair measures physiological and environmental changes. Body temperature, blood pressure, breathe rate and anxiety level is measured by the wheel chair. If value of previously mentioned parameter has deviated from threshold, no movement activity is carried out. In [4] Nirmal T M designed a wheel chair for physically handicapped and mentally disabled persons. This wheel chair can be controlled by eyes, voice and joystick. It monitors the room conditions like humidity, temperature and fire etc. and according to patient's health conditions it will inform the doctor via text message. It also monitors the patient's heartbeat and brain, if any reading is found which does not match the normal values, it will inform to the doctor by text message. According to user wish the wheelchair can be made in to a semi sleeper bed. The designed wheel chair also facilitates physically handicapped people to have food/medicines and other needy things using robotic hand that is being integrated with it. It also monitors the human presence and informs the user. Vijendra P. Meshram et al. introduced an automated system to control the navigation of wheel chair based on head movement of physically challenged person in [5]. In this automated device an accelerometer device (ADXL535) based transmitter is fitted on person's head. The transmitter will generate different command based on the head movements. These signals will be received by receiver. This receiver commands the motor fitted to the wheel chair. It also contains obstacle detection system such to detect various kind of obstacles in the path of the chair.

III. BLOCK DIAGRAM

The complete project is divided into three sections. Control input along with sensors (takes input), microcontroller and motor driver. The wheel chair is controlled using breathing and joystick. Electrical pulses generated by the user's breath will get amplified. These signals will be fed to the microcontroller, which decides the movement of wheel chair. There is an LCD display for user to see the directions. If user wishes to move wheel chair in any direction, he/she can breathe in the mouthpiece by seeing directions on the LCD or LED display.

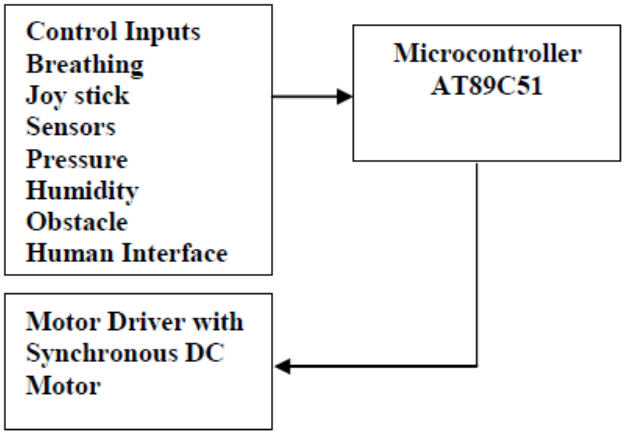

Fig.1 Block diagram of breathing sensor based wheel chair

Dip trace software is used to draw the pin diagram and PCB layout. It is clear from circuit diagram that we have used microcontroller AT89C51. The breathing sensor is connected to the port 3 of microcontroller. LCD shows indication for four different directions. For example LCD shows right and if user exhales at that particular time then wheel chair moves in right direction. Microcontroller will generate a command depending upon the pulse width modulation. Depending on this command the motor moves in corresponding direction.

IV. HARDWARE AND SOFTWARE PLATFORMS

Hardware requirements:

- AT89c51 Microcontroller
- MAX232 TTL level converter
- 12 Volt DC power supply
- L293D Motor driver IC
- Ultrasonic sensor module
- Humidity sensor IC
- Pressure sensor
- LCD module used as display

Software requirements:

- Kiel uv3 for Embedded "C" programming
- Micro flash for chip burning
- Dip trace software for PCB design

Published By:
Blue Eyes Intelligence Engineering
and Sciences Publication (BEIESP)

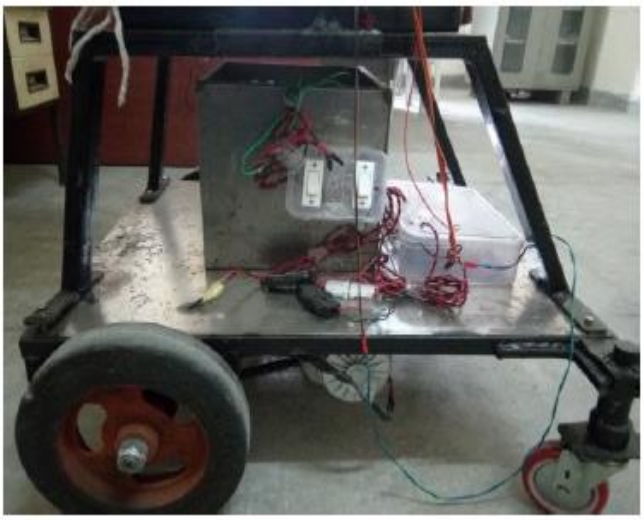

Fig.2. Wheel chair base

Fig.3. Designed wheel chair

V. RESULT

An automated wheel chair based on breathing sensor is successfully designed. Electrical pulses are generated corresponding to breathing (i.e. exhaling) in mouthpiece. These electrical pulses will be input for microcontroller. The microcontroller checks, for which direction these input signals have been generated (shown on LCD) and hence wheel chair moves in that particular direction. Wheel chair can move in all four directions properly. The accident protection technology enhances the safety feature of this wheel chair. All four possible directions are tabulated below in Table.1.

Table.1 Mode of Operation

Directions	Motor1 (Left)	Motor2 (Right)
Forward	On (forward)	On (forward)
Backward	On (reverse)	On (reverse)
Right	On (forward)	Off
Left	Off	On (forward)

VI. FUTURE SCOPE

This wheelchair can be operated by a wireless remote. Output of sensor can be applied to wireless transmitter circuit and can be received at wheelchair circuit by receiver circuitry, further wireless operation can reduce wiring arrangements. We can use voice command IC to interface our voice signals with microcontroller. Research can be done on development of wheelchair for paralyzed persons based on human nervous system.

VII. CONCLUSION

Breathing sensor based wheelchair can be used to help handicapped as well as paralyzed persons, especially for those, who are not able to move their body parts. The project was the combination of the electronic circuits, the hardware designing and software programming. The system was successfully designed to move the wheelchair forward, backward, left, and right or remain in the same position.

REFERENCES

1. Vasundhara G. Posugade, Komal K. Shedge, Chaitali S. Tikhe "Touch-screen based wheelchair system" International Journal of Engineering Research and Applications (IJERA) Vol. 2, Issue 2, Mar-Apr 2012, pp.1245-1248.
2. Dr. Shaik Meeravali, M. Aparna "Design and development of a hand-glove controlled wheel chair based on MEMS" International Journal of Engineering Trends and Technology (IJETT), Volume 4, Issue 8, August 2013, pp: 3706-3712.
3. Rakhi A. Kalantri, D. K. Chitre "Automatic wheelchair using gesture recognition" International Journal of Engineering and Advanced Technology (IJEAT), Volume 2, Issue 6, August 2013, pp: 146-150.
4. Pradeep Kumar Rattewal, Parteek Kumar "Design and fabrication of low cost intelligent wheelchair" International Journal of Engineering and Computer Science (IJECS), Volume 3, Issue 6, June, 2014 Page No. 6432-6437.
5. Nirmal T M "Wheelchair for physically and mentally disabled persons" International Journal of Electrical and Electronics Research, Volume 2, Issue 2, April - June 2014, pp: 112-118.
6. Mr. Vijendra P. Meshram, Ms. Pooja A. Rajurkar, Ms. Mohini M. Bhiogade, Ms. Arundhati C. Kharabe, Mr. Dhiraj Banewar. "Wheelchair automation using head gesture" International Journal of Advanced Research in Computer Science and Software Engineering, Volume 5, Issue 1, January 2015, pp: 641-646.

Published By:
Blue Eyes Intelligence Engineering and Sciences Publication (BEIESP)