International Journal of Engineering and Advanced Technology (IJEAT)
ISSN: 2249-8958 (Online), Volume-4 Issue-4, April 2015

Image Denoising based on Sparse Representation and Dual Dictionary

Aneesh G Nath, Sreeram G, Sharafudeen K, Sreeraj M C

Abstract*— Learning-based image denoising aims to reconstruct a denoised image from the prior model trained by a set of noised image patches. In this paper, we address the image denoising problem, where zero-mean white and homogeneous Gaussian additive noise is to be removed from a given image. Image denoising method via dual-dictionary learning and sparse representation consists of the main dictionary learning and the residual dictionary learning to recover denoised image. The approach taken is based on sparse representations over trained dictionaries. Using the K-SVD algorithm, we obtain a dictionary that describes the image content effectively. Using the corrupted or noised image primary main dictionary training is done. Since the K-SVD is limited in handling small image patches, we extend its deployment to arbitrary image sizes by defining a global image prior that forces sparsity over patches in every location in the image. We provide a residual dictionary learning phase which leads to a simple and effective denoising mechanism. This leads to a better denoising performance, and surpassing recently published leading alternative denoising methods. Extensive experimental results on test images validate that by employing the proposed two-layer progressive scheme, more image details can be recovered and much better results can be achieved in terms of both PSNR and visual perception.

***Index Terms*— sparse representation, dictionary learning, image denoising, K-SVD, residual dictionary.**

I. INTRODUCTION

Image denoising is critical problem that has been implemented by a variety of techniques that rely on implicit and explicit modeling of noise, which is often assumed to have a Gaussian distribution function. The denoising approaches that have been developed can broadly be classified into local and nonlocal methods. While local methods uses weighted averaging and have a limited estimation support, while nonlocal methods utilize redundancy and work on larger support regions to provide better statistics. Image denoising deals with the problem of reconstructing an image x from its measurements y, measured in the presence of an additive zero-mean white and homogeneous Gaussian noise v, with standard deviation σ. The measured image is, thus

$$y = x + v \qquad (1)$$

Manuscript published on 30 April 2015.
***** Correspondence Author (s)
Aneesh G Nath*, Department of CSE, TKM College of Engg.,Kollam, Kerala, India.
Sreeram G, Student, Department of CSE, TKM College of Engg.,Kollam, Kerala, India.
Sharafudeen K, Student, Department of CSE, TKM College of Engg.,Kollam, Kerala, India.
Sreeraj M C Student, Department of CSE, TKM College of Engg.,Kollam, Kerala, India.

Then the problem is to design an algorithm which removes the noise from y, making a close reconstruction of original image x possible.

The linear relationships among high-dimension signals are accurately recovered from their low-dimension projections by sparse representation. Instead of working directly with the patch pairs sampled from high- and low-resolution images, based on the assumption that for a given noised patch, the sparse representation vector in the over-complete dictionary trained by noised images is the same as the one of its corresponding noiseless patch in the over-complete dictionary trained by high-resolution images, leant a compact representation for these patch pairs to capture the co-occurrence prior to improve the speed and the robustness significantly, achieving state-of-the-art performance. Lately, embarking from the algorithm, a modified approach is proposed, which shows to be more efficient and much faster.

However, due to the restriction of the over-complete dictionary's size and the intrinsic sparsity of the algorithm, one limitation in recovering high-frequency details should be noticed. It's difficult to recover the details of the noiseless image in the corresponding original image completely from the initial interpolation of an input noised image, for the gap between the frequency spectrum of the corresponding original image and that of the initial interpolation is so wide that learning-based algorithm usually can't work well.

In this paper, the noiseless image to be estimated is considered as a combination of two components: main high-frequency (MHF) and residual high-frequency (RHF), and we develop a novel method for learning-based image denoising via sparse representation, which consists of dual-dictionary learning levels: main dictionary learning and residual dictionary learning, corresponding to recovering MHF and RHF, respectively. Through the proposed two-layer algorithm, in which details of high-frequency are estimated by a progressive way, the main high-frequency is first recovered to reduce the gap of the frequency spectrum primarily, and then the residual high-frequency is reconstructed to enhance the result effectively with a shorter gap of the frequency spectrum.

II. PREVIOUS WORKS IN IMAGE DENOISING

For last five decades this problem has been addressed in diverse points of view. Statistical estimators of all sorts, spatial adaptive filters, stochastic analysis, partial differential equations, transform-domain methods, splines and other approximation theory methods, morphological analysis, order statistics, and more, are some of the many directions explored in studying this problem.

Published By:
Blue Eyes Intelligence Engineering and Sciences Publication (BEIESP)

Denoising based on sparsity became an interested research area in the past decade. At first, sparsity of the unitary wavelet coefficients was considered, leading to the shrinkage algorithm [1]–[9]. One reason to turn to redundant representations was the desire to have the shift invariance property [10]. Also, with the growing realization that regular separable 1-D wavelets are inappropriate for handling images, several new tailored multiscale and directional redundant transforms were introduced, including the curvelet [11], [12], contourlet [13], [14], wedgelet [15], bandlet [16], [17], and the steerable wavelet [18], [19]. In parallel, the introduction of the matching pursuit [20], [21] and the basis pursuit denoising [22] gave rise to the ability to address the image denoising problem as a direct sparse decomposition technique over redundant dictionaries.

III. PROPOSED DUAL DICTIONARY BASED SCHEME

The proposed scheme consists of a dictionary learning stage that trains dual dictionaries[26], namely main dictionary (MD) and residual dictionary (RD), and an image reconstruction stage, performing the image denoising on the input image using the trained model from the previous stage. A preliminary denoising is applied on the noised image to make it easier to apply to dictionary learning [23],[24] phase.

A. Dictionary Learning:

In this stage, two dictionaries are trained using sparse representation, i.e. MD and RD, which correspond to the recovery of MHF and RHF, respectively. Many methods have been proposed for dictionary learning by sparse representation. Here, we adopt the K-SVD[25].

The dictionary learning stage starts by collecting a set of training images without any noise. A training images without any noise denoted by H_{ORG}, at first noise is added to the training image (H_{ORG}) and down sampled to yield a corresponding noisy low-frequency image which is then filtered by using a preliminary filter, a noisy low-frequency image is constructed, denoted by H_{LF} in Fig which is of the same size as H_{ORG}. Then, real noisy high-frequency image H_{HF} is generated by subtracting H_{LF} from H_{ORG}.

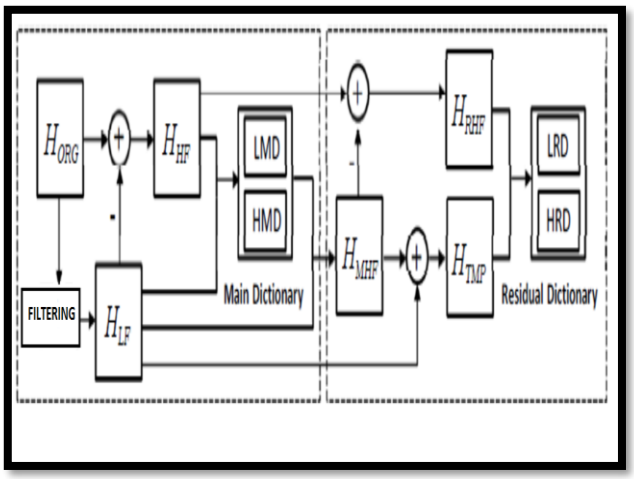

Fig. 1 Illustration of dictionary learning stage.

Then, MD will be built, which is actually a combination of two coupled sub-dictionaries: low-frequency main dictionary (LMD) and high-frequency main dictionary (HMD). With H_{LF} and H_{HF}, local patches are extracted forming the training data TD = $\{p_h^k, p_l^k\}_k$. p_h^k is the set of patches extracted from the high-resolution image H_{HF} directly, and p_l^k mean those patches built by first extracting patches from filtered images obtained by filtering H_{LF} with certain high-pass filters such as Laplacian high-pass filters, and then reducing the dimensions by Principal Component Analysis (PCA) algorithm. Next, the K-SVD dictionary training is applied to the set of patches $\{p_l^k\}_k$ generating LMD:

$$LMD, \{q^k\} = arg \min_{LMD,\{q^k\}} \Sigma_k \left\| p_l^k - LMD.q^k \right\|_2^2$$
$$s.t \left\| q^k \right\| \le L \forall K \qquad (2)$$

Where $\{q^k\}_k$ are sparse representation vectors, and $||.||_0$ is the *norm* l^0 counting the nonzero entries of a vector. Based on the assumption that the patch p_h^k can be recovered by approximation as $P_h^k \approx$ HMD.q^k HMD can be defined by minimizing the following mean approximation error, i.e.,

$$HMD = arg \min_{HMD} \Sigma_k \left\| p_h^k - HMD.q^k \right\|_2^2 \qquad (3)$$

$$= arg \min_{HMD} \Sigma_k \left\| p_h^k - HMD.Q \right\|_2^2 \qquad (4)$$

Where the matrices P_h and **Q** consist of$\{p_h^k\}_k$, and$\{q^k\}_k$, respectively. Therefore, the solution can be solved as follows (given that **Q** has full row rank):

$$HMD = P_h Q^+ = P_h Q^T (QQ^T)^{-1} \qquad (5)$$

Finally, the residual dictionary will be trained in the following steps. With the main dictionary and H_{LF} the noisy main high-frequency image denoted by H_{MHF} is produced by virtue of image reconstruction method which will be introduced in the next subsection. Utilizing H_{MHF}, the noisy temporary image denoted by H_{TMP} which contains more details than H_{LF} and the noisy residual high-frequency image denoted by H_{RHF} are generated, as shown in Fig. Thus, RD can be built with the input of H_{TMP} and H_{RHF} using the same dictionary learning method as MD. It is important to note that RD also consists of two coupled sub-dictionaries: low-frequency residual dictionary (LRD) and high-frequency residual dictionary (HRD), and both MD and RD make up the dual-dictionaries.

A. Sparsity based Dictionary creation

Creation of both MD and RD is done by two steps. Low resolution dictionary training and high resolution dictionary training. The procedure for training dictionaries is adopted from [24]'s method.

Low Resolution Dictionary Training:

The dictionary training stage starts with the low-resolution patches $\{\hat{p}_l^k\}_k$ extracted from low resolution image. As the result of applying K-SVD dictionary learning algorithms to these patches, the dictionary $L_D \in R^{n\times m}$ is created.

Published By:
Blue Eyes Intelligence Engineering
and Sciences Publication (BEIESP)

This training process also generates the sparse representation coefficient vectors q^k corresponding to the training patches $\{\hat{p}_l^k\}_k$ as a side product. Here $\|\cdot\|_0$ is the l_0 norm gives the count of nonzero values in the vector.

High Resolution Dictionary Learning:

By approximating $p_h^k \approx H_D q^k$, the HR patch p_h^k can

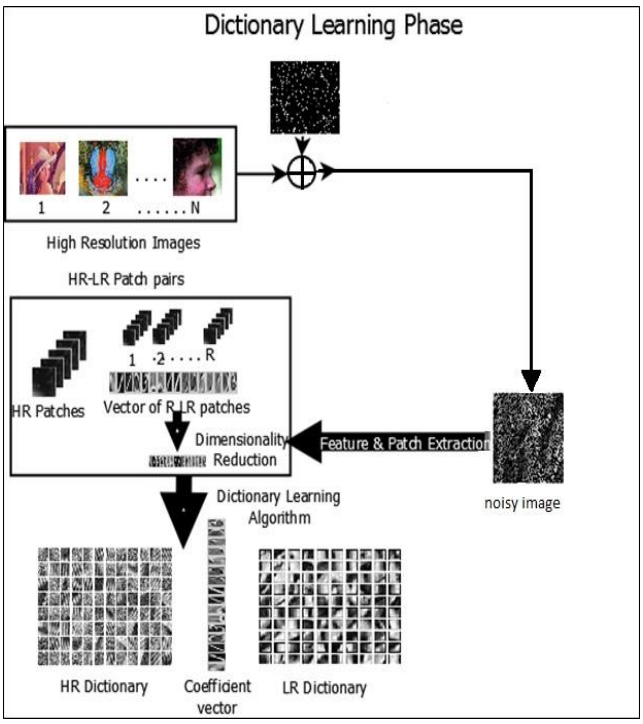

Fig. 2. Single dictionary learning in detail

be recovered. For this the already generated sparse representation vector of LR patch q^k is multiplied with the high-resolution dictionary H_D. The high resolution dictionary H_D can be found to get the correct approximation. So, H_D is the dictionary matrix which minimizes the approximation error.

B. Image Reconstruction

Image reconstruction stage attempts to magnify an input noisy image, which is assumed to be generated from an original image by adding the same noise as used in the above learning stage. The final estimated image is reconstructed by using dual dictionaries successively and more high-frequency details are added progressively, as illustrated in Fig 3. To begin with, an input noisy image to produce a noisy low-frequency image denoted by H_{LF}. Combining H_{LF} and MD, the main high-frequency image denoted by H_{MHF} is generated employing the image reconstruction method using Sparse-Representations.

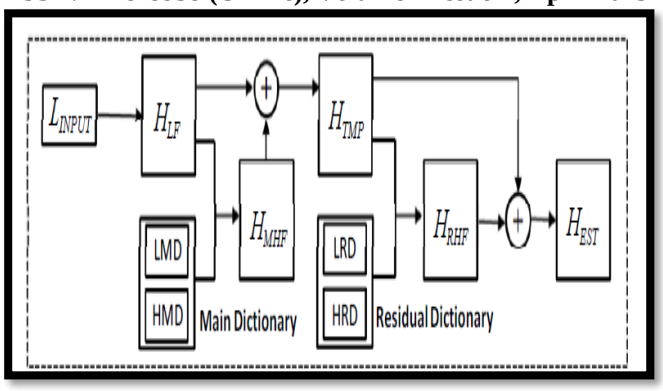

Fig. 3. Illustration of image reconstruction stage.

Concretely, H_{LF} is filtered with the same high-pass filters and PCA projection as the training stage, and then is decomposed into overlapped patches $\{p_l^k\}_k$

The OMP algorithm is applied to generate $\{p_l^k\}_k$ and the sparse representation vectors $\{q^k\}_k$ is built by allocating L atoms to their representation. The representation $\{q^k\}_k$ vectors are multiplied by HMD, reconstructing high-resolution patches by

$$\{p_h^k\}_k = \{HDM.q^k\}_k \qquad (6)$$

Defining R_k the operator which extracts a patch from the high resolution image in location k. The main high-frequency image denoted by H_{MHF} is generated by solving the following minimization problem:

$$H_{MHF} = arg \min_{H_{MHF}} \sum_k \left\| p_h^k - HMD.Q \right\|_2^2 \qquad (7)$$

Which has a closed-form Least-Square solution, given by

$$H_{MHF} = [\sum_k R_k^T R_k]^{-1} \sum_k R_k^T \hat{p}_h^k \qquad (8)$$

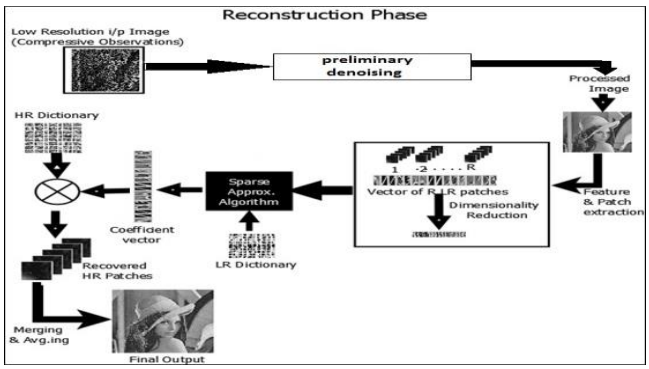

Fig.4. Single dictionary reconstruction in detail

IV. RESULTS

The proposed algorithm is implemented in MATLAB R2012a using K-SVD for learning dictionary and OMP algorithm for sparse approximation. The computer system used is with Intel Core i5 – 2410M CPU at 2.30GHz with 4GB of RAM. Set of sample images are collected and zero-mean white and homogeneous Gaussian additive noise has been added with different variances ranging from 0.001 to 0.1.

Published By:
Blue Eyes Intelligence Engineering
and Sciences Publication (BEIESP)

In dictionary training stage adding more and more images for training would lead to improved results. The feature extraction from the low resolution image is performed with four filters: $f_1 = [1, -1] = f_2^T$ and $f_3 = [1, -2, 1] = f_4^T$. The size of each patch is set to $n = 81$ (9 × 9), and after applying PCA the dimensionality has been reduced from 324 (4×81) dimensions to 30 dimensions. In dictionary training, number of iterations in K-SVD algorithm is set to 40, with number of atoms in dictionary as $m = 1000$. The value of L which defines the sparsity is given as 3.

For evaluating the performance of the proposed system with varying amount of noises, we took noise variances ranging from 0.001 to 0.1 for standard 3 images of varying sizes. Analyzing the PSNR and SSIM comparison of the results which is also shown as graphs, it is clear that using two levels of dictionary provides better PSNR and visual qualities.

Table 1: PSNR &SSIM for various noise levels for Lena.tif

VARIANCE	NOISY IMAGE PSNR	MAIN DICTIONARY PSNR	MAIN +RESIDUAL DICTIONARY PSNR	MAIN +RESIDUAL DICTIONARY SSIM
0.001	30	32.4	32.9	0.89
0.01	20.08	29.5	30	0.88
0.02	17.19	27.7	28.2	0.86
0.04	14.45	25.5	26	0.84
0.06	12.9	24.3	24.9	0.81
0.08	12.05	23.3	23.9	0.79
0.1	11.35	22.5	23	0.77

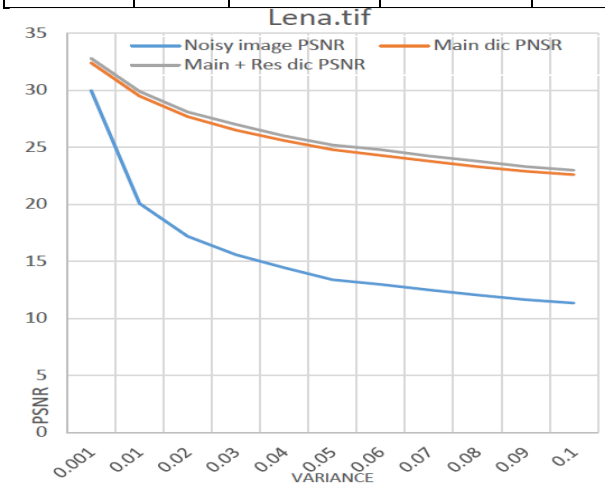

Fig. 5. PSNR comparison graph of Lena.tif

Table 2: PSNR &SSIM for various noise levels for peppers.tif

VARIANCE	NOISY IMAGE PSNR	MAIN DICTIONARY PSNR	MAIN +RESIDUAL DICTIONARY PSNR	MAIN +RESIDUAL DICTIONARY SSIM
0.001	29	32.1	32.6	0.86
0.01	20.15	29.4	30	0.85
0.02	17.28	27.6	28.1	0.84
0.04	14.56	25.5	26	0.81
0.06	13	24	24.6	0.79
0.08	12.12	23	23.5	0.77
0.1	11.4	22.22	22.8	0.75

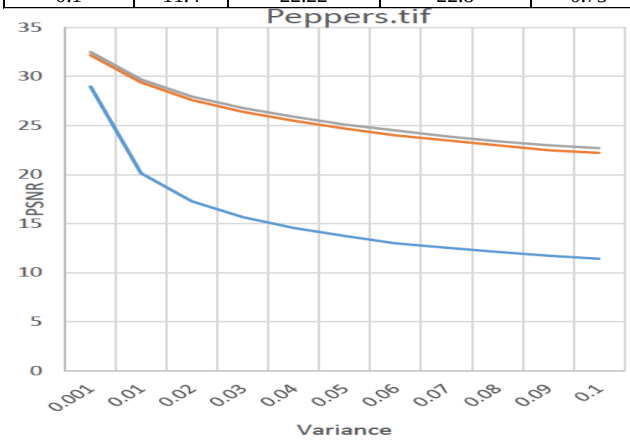

Fig. 6. PSNR comparison graph of Peppers.tif

Table 3: PSNR &SSIM for various noise levels for HR-067.tif

VARIANCE	NOISY IMAGE PSNR	MAIN DICTIONARY PSNR	MAIN +RESIDUAL DICTIONARY PSNR	MAIN +RESIDUAL DICTIONARY SSIM
0.001	30	31.6	32	0.9
0.01	20.7	28.6	29	0.89
0.02	17.9	26.5	27	0.88
0.04	15.13	24.2	24.7	0.85
0.06	13.6	22	22.5	0.82
0.08	12.5	21.4	21.8	0.79
0.01	11.78	20.5	20.9	0.77

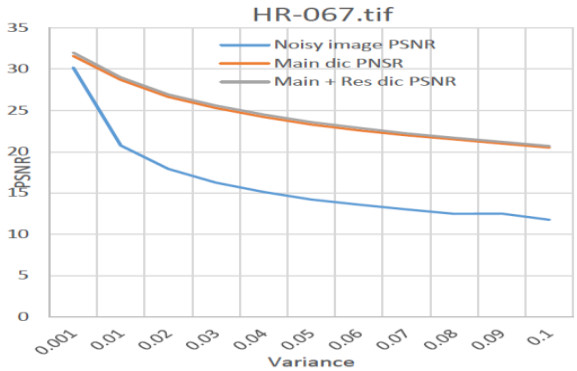

Fig. 7. PSNR comparison graph of HR-067.tif

V. Conclusion

This work presents an improved image denoising approach for creating noiseless images from noisy samples using two dictionaries. This work has presented a simple method for image denoising, leading to state-of-the-art performance, equivalent to and sometimes surpassing recently published leading alternatives. The proposed method is based on local operations and involves sparse decompositions of each image block under one fixed over-complete dictionary, and a simple average calculations.

Published By:
Blue Eyes Intelligence Engineering
and Sciences Publication (BEIESP)

The content of the dictionary is of prime importance for the denoising process we have shown that a dictionary trained for natural real images, as well as an adaptive dictionary trained on patches of the noisy image itself, both perform very well.

REFERENCES

[1] D. L. Donoho and I. M. Johnstone, "Ideal spatial adaptation by wavelet shrinkage," Biometrika, vol. 81, no. 3, pp. 425–455, Sep. 1994.
[2] D. L. Donoho, "De-noising by soft thresholding," IEEE Trans. Inf. Theory, vol. 41, no. 3, pp. 613–627, May 1995.
[3] D. L. Donoho, I. M. Johnstone, G. Kerkyacharian, and D. Picard, "Wavelet shrinkage—Asymptopia," J. Roy. Statist. Soc. B—Methodological,vol. 57, no. 2, pp. 301–337, 1995.
[4] D. L. Donoho and I. M. Johnstone, "Adapting to unknown smoothness via wavelet shrinkage," J. Amer. Statist. Assoc., vol. 90, no. 432, pp. 1200–1224, Dec. 1995.
[5] D. L. Donoho and I. M. Johnstone, "Minimax estimation via wavelet shrinkage," Ann. Statist., vol. 26, no. 3, pp. 879–921, Jun. 1998.
[6] E. P. Simoncelli and E. H. Adelson, "Noise removal via Bayesian wavelet coring," in Proc. Int. Conf. Image Processing, Lausanne Switzerland, Sep. 1996.
[7] Chambolle, R. A. DeVore, N.-Y. Lee, and B. J. Lucier, "Nonlinear wavelet image processing: Variational problems, compression, and noise removal through wavelet shrinkage," IEEE Trans. Image Process., vol. 7, no. 3, pp. 319–335, Mar. 1998.
[8] P. Moulin and J. Liu, "Analysis of multiresolution image denoising schemes using generalized Gaussian and complexity priors," IEEE Trans. Inf. Theory, vol. 45, no. 3, pp. 909–919, Apr. 1999.
[9] M. Jansen, Noise Reduction by Wavelet Thresholding. New York: Springer-Verlag, 2001.
[10] R. Coifman and D. L. Donoho, "Translation invariant de-noising," in In Wavelets and Statistics, Lecture Notes in Statistics. New York: Springer-Verlag, 1995, pp. 125–150, 1995. Image Denoising based on Sparse representation and Dual Dictionary
[11] E. J. Candes and D. L. Donoho, "Recovering edges in ill-posed inverse problems: Optimality of curvelet frames," Ann. Statist., vol. 30, no. 3, pp. 784–842, Jun. 2002.
[12] E. J. Candès and D. L. Donoho, "New tight frames of curvelets and the problem of approximating piecewise C images with piecewise C edges," Commun. Pure Appl. Math., vol. 57, pp. 219–266, Feb. 2004.
[13] M. N. Do and M. Vetterli, Contourlets, Beyond Wavelets, G. V. Welland, Ed. New York: Academic, 2003.
[14] M. N. Do and M. Vetterli, "Framing pyramids," IEEE Trans. Signal Process., vol. 51, pp. 2329–2342, Sep. 2003.
[15] D. L. Donoho, "Wedgelets: Nearly minimax estimation of edges," Ann.Statist., vol. 27, no. 3, pp. 859–897, Jun. 1998.
[16] S. Mallat and E. LePennec, "Sparse geometric image representation with bandelets," IEEE Trans. Image Process., vol. 14, no. 4, pp. 423–438, Apr. 2005.
[17] S. Mallat and E. LePennec, "Bandelet image approximation and compression,"SIAM J. Multiscale Model. Simul., 2005, to be published.
[18] W. T. Freeman and E. H. Adelson, "The design and use of steerable filters," IEEE Pattern Anal. Mach. Intell., vol. 13, no. 9, pp. 891–906, Sep. 1991.
[19] [19] E. P. Simoncelli, W. T. Freeman, E. H. Adelson, and D. H. Heeger, "Shiftable multi-scale transforms," IEEE Trans Inf. Theory, vol. 38, no. 2, pp. 587–607, Mar. 1992.
[20] S. Mallat and Z. Zhang, "Matching pursuit in a time-frequency dictionary,"IEEE Trans. Signal Process., vol. 41, no. 12, pp. 3397–3415,Dec. 1993.
[21] Y. C. Pati, R. Rezaiifar, and P. S. Krishnaprasad, "Orthogonal matching pursuit: Recursive function approximation with applications to wavelet decomposition," presented at the 27th Annu. Asilomar Conf. Signals,Systems, and Computers, 1993.
[22] S. S. Chen, D. L. Donoho, and M. A. Saunders, "Atomic decomposition by basis pursuit," SIAM Rev., vol. 43, no. 1, pp. 129–59, 2001.
[23] J. Yang, J. Wright, T. S. Huang, and Y. Ma," Image super-resolution as sparse representation of raw image patches", Proceedings of IEEE Conference on Computer Vision and Pattern Recognition, pp. 1-8, 2008.
[24] R. Zeyde, M. Elad, and M. Protter, On Single Image Scale-Up using Sparse-Representations, Curves & Surfaces, LNCS 6920, pp. 711–730, 2011.
[25] M. Aharon, M. Elad, and A. Bruckstein, K-SVD: An algorithm for designing overcomplete dictionaries for sparse representation, IEEE Transactions on Signal Processing, vol. 54, no. 11, pp. 4311–4322, Nov. 2006.
[26] Jian Zhang, Chen Zhao, Ruiqin Xiong, Siwei Ma, Debin Zhao," Image Super-Resolution via Dual-Dictionary Learning And Sparse Representation", IEEE Int. Symposium of Circuits and Systems (ISCAS) 2012

Aneesh G Nath, personal profile which contains their education details, their publications, research work, membership, achievements, with photo that will be maximum 200-400 words.

Sreeram G, personal profile which contains their education details, their publications, research work, membership, achievements, with photo that will be maximum 200-400 words.

Sharafudeen K, personal profile which contains their education details, their publications, research work, membership, achievements, with photo that will be maximum 200-400 words.

Published By:
Blue Eyes Intelligence Engineering and Sciences Publication (BEIESP)