International Journal of Engineering and Advanced Technology (IJEAT)
ISSN: 2249-8958 (Online), Volume-4 Issue-2, December 2014

Finite Element Investigation of Geometry Effect on Pressure Vessel under Combined Structural and Thermal Loads

Mutahir Ahmed, Rafi Ullah Khan, Saeed Badshah, Sakhi Jan

Abstract— ***Pressure vessels are commonly used for large industrial and commercial applications such as storage, filtration and softening purposes. Pressure vessels usually bear pressure and thermal loadings namely thermo-mechanical loadings and experiences expansion loads due to change in temperature. In this study, design and analysis are performed using commercial code to compare the stresses between different geometries. Structural design of pressure vessel is also optimized to accommodate thermal as well structural loads. Von-mises stress, hoop stress and deformation are plotted for all case studies.***

Index Terms— ***Stress distribution, stress concentration, Geometric non-linearity, pressure vessels.***

I. INTRODUCTION

Pressure vessels are commonly used in daily life for different purposes ranging from domestic use for storage of hot water and natural gas to industrial applications for the storage of various high pressure gases and liquids. Pressure vessels should be carefully designed to avoid failure which may cause loss of life and money. Depending upon the application, the design of pressure vessels may complex due to complex geometry, combined structural and thermal loads and aggressive environment. In such situations, analytical solutions will become complex and the designer often use approximate solutions for design. Various standards are also available for the design of pressure vessels such as ASME code VIII and API [1] codes, however they results in conservative designs. Also for non standard shapes and intersections and geometrical discontinuity, limit load and stress concentration formulae are not available [2][3]. Discontinuity always appears with changing section in any mechanical component like pressure vessel case shown in Figure 1. Finite Element Analysis (FEA) provides approximate solutions for complex problems and widely used for structural analysis. It involves descretization of the structure, application of loads, solution and post processing. Various commercial softwares like ANSYS, NASTRAN, and ABAQUS are available for FEA.

Manuscript published on 30 December 2014.
***** Correspondence Author (s)
Mutahir Ahmed National Engineering and Scientific Commission, Islamabad, Pakistan.
Rafi Ullah Khan, Department of Mechanical Engineering, International Islamic University, Islamabad, Pakistan.
Saeed Badshah, Department of Mechanical Engineering, International Islamic University, Islamabad, Pakistan.
Sakhi Jan, Department of Mechanical Engineering, International Islamic University, Islamabad, Pakistan.

Diamantoudis and Kermanidis [4] comparatively studied for design by analysis and design by formula of a cylinder to nozzle intersection using different finite element techniques. Liu et al [5] assessed limit pressures and corresponding maximum local membrane stress concentration factors for two orthogonally intersecting thin-walled cylindrical shells subjected to internal pressure. Brabin et al [6] used FEA to obtain the elastic stress distribution at cylinder-to cylinder junction in pressurized shell structures that have applications in space vehicle design. Little work has been done to investigate the effect of geometrical non-linearity in pressure vessels under combined thermal and structural loads. A.B. Smetankin (2006) [7] worked on the structural modeling and stress analysis of nozzle connections in ellipsoidal heads subjected to external loadings.

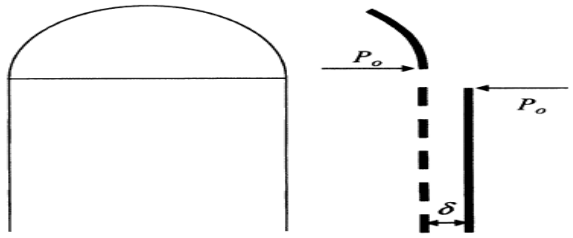

Figure: 1 Discontinuity at the hemispherical end

The features of the structural modeling of ellipsoidal-cylinder shell intersections, numerical procedure and SAIS special-purpose computer program are discussed. A parametric study of the effects of geometric parameters on the maximum effective stresses in the ellipsoid-cylinder intersections under loading was performed in. The objective of the present work is to investigate the effect of geometrical non-linearity on the stress distribution in pressure vessel under combined thermal and structural loads. Two different geometries of pressure vessels as shown in Figure 2, having linear and non-linear (circular) attached heads has been analyzed using commercial FEA software ANSYS.

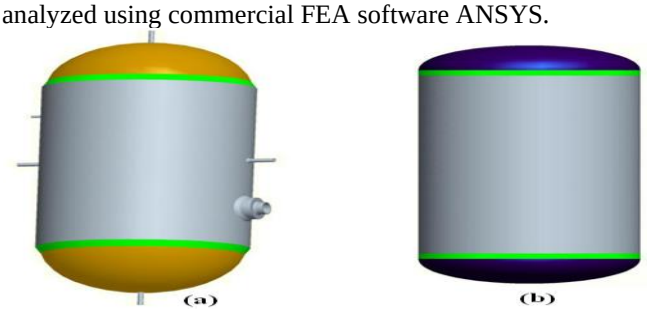

Figure: 2 Pressure Vessel head and cylindrical shell juncture

Published By:
Blue Eyes Intelligence Engineering and Sciences Publication (BEIESP)

At the juncture of these two parts, the continuity of the vessel still has to be preserved, and this will be achieved by local bending. This localized bending will cause additional stresses like discontinuity stresses which need special investigation.

II. FINITE ELEMENT ANALYSIS

Finite element analysis (FEA) has been carried out on cylindrical pressure vessels having geometric discontinuity at juncture of cylindrical portion and cap with various geometries and thicknesses. Figure 3(b) shows the initial geometry design of pressure vessel which seems to be stronger due to more material at base. This design is selected to compare the geometric discontinuity with uniform thickness of pressure vessel. After detailed analysis suggested geometry of the pressure vessel is shown in Figure 3(a) & Figure 4. Three-dimensional solid models were used for all the vessels mentioned in Table1. Symmetric conditions were invoked such that only a quarter model of the vessel was required with appropriate symmetry boundary conditions applied.

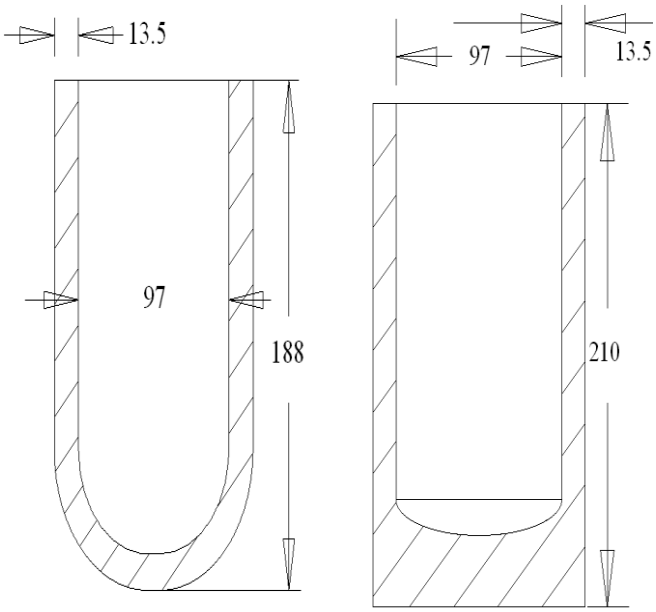

(a) **(b)**

Figure 3: Drawing sketch of pressure vessel

2.1 Pre-processing

Pressure vessel model with different thicknesses like 6, 8.5 10, 12, 13.5 mm are modeled in PRO-Engineer. The model of initial pressure vessel design shown in Figure 4 is exported from PRO-engineer as IGES format with solid as option and then imported into ANSYS mechanical APDL Environment. Whereas various cross section of pressure vessel with modified design are analyzed in ANSYS workbench to reduce computational time.

2.2 Solving the model

Model may be considered to be ready for analysis after creating mesh, applying material properties (Table 3), boundary conditions and loadings (Table 4).

a) 1st step: Transient thermal analysis was carried out for 5, 60 and 300 sec.

b) 2nd step: Static structural analysis by importing thermal loads at 5, 60 and 300 sec.

c) 3rd step: Various analysis were done with various thicknesses of pressure vessel

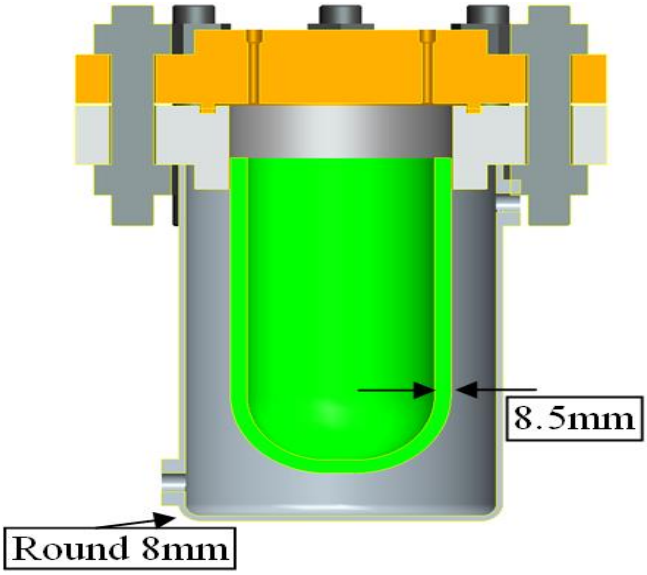

Figure 4: Optimized design

Table 1: Various cross sections and sizes of pressure vessel

Design	*Type*	*Inner Dia. (mm)*	*Outer Dia. (mm)*	*Height (mm)*
Initial	Ellipsoidal from inner surface and non-uniform through thickness	97mm	124mm	210mm
1st optimization	Ellipsoidal with uniform thickness	97mm	124mm	182mm
2nd optimization	Spherical end with uniform but variable thicknesses	97mm	109,114,117,121,124	175mm

2.3 Post-processing

After completing the analysis work, results of the model were investigated using post-processor and stress contours and geometry displacements were generated. The meshed model and loadings in initial pressure vessel design are shown in Figures 5 and 6.

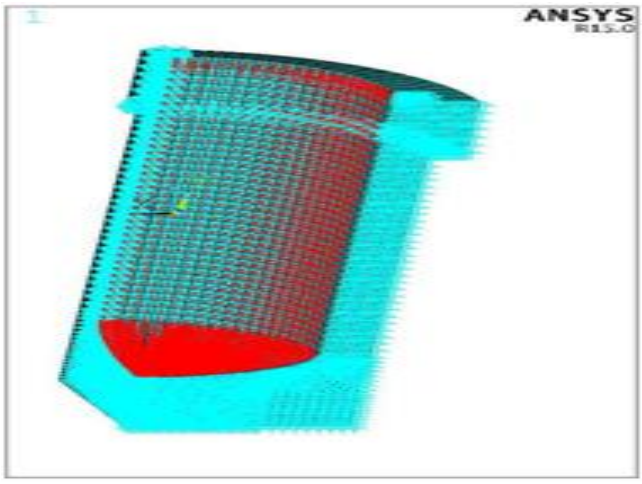

Figure 5: Loads & boundary conditions

Published By:
Blue Eyes Intelligence Engineering
and Sciences Publication (BEIESP)

The conservative local membrane stresses in cylindrical pressure vessels are dominant with nozzles, abrupt change in radius of curvature due to misalignment and angular distortion, and/or thickness of the shell. This induces additional bending stress which may alter the stress distribution at the regions of the discontinuity. In this paper only the cross-sectional discontinuity of the vessel is taking into account [5] [6].

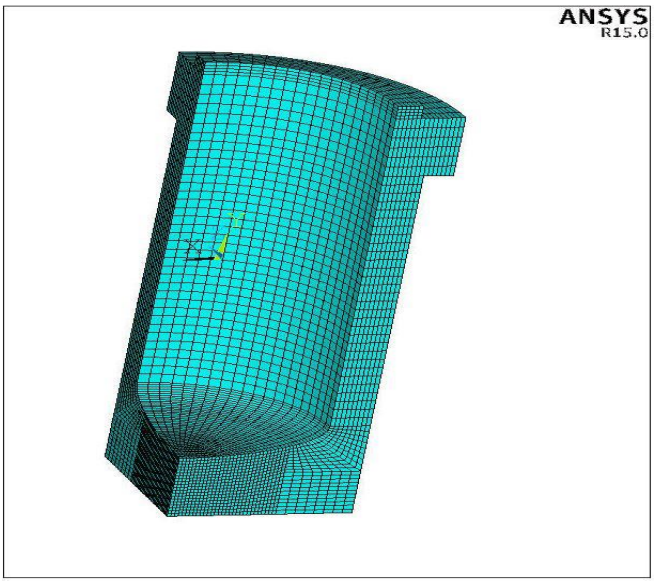

Figure 6: Meshed model with element "solid 185"

III. ANALYTICAL CALCULATIONS

Pressure vessels geometry mainly consists of spheres, cylinders, cones, ellipsoids and tori-spherical type structures. Ratio of mean radius and thickness of pressure vessel more than 10, referred to as membranes/thin walled cylinder, will cause membrane stresses. K. Magnucki (2002) [8] presented work on the problem of stress concentration in a cylindrical pressure vessel with ellipsoidal heads subject to internal pressure. At the line, where the ellipsoidal head is adjacent to the circular cylindrical shell, a shear force and bending moment occur, disturbing the membrane stress state in the vessel. Membrane stresses are average tension or compression stresses and acts tangentially to its surface and remain uniform through thickness.

$$\sigma_r = \frac{p_i r_i^2 - p_o r_o^2 + r_i^2 r_o^2 (p_o - p_i)/r^2}{r_o^2 - r_i^2} \quad (1)$$

$$\sigma_t = \frac{p_i r_i^2 - p_o r_o^2 - r_i^2 r_o^2 (p_o - p_i)/r^2}{r_o^2 - r_i^2} \quad (2)$$

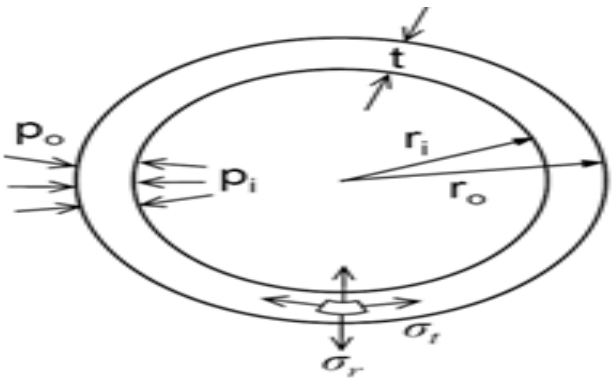

Figure 7: Pressure vessel cross section

Hoop stress from static analysis (only pressure load) shown in Figure 9, is 22.4 MPa, whereas from eq. 2 hoop stresses is 23 MPa. Thin wall vessels are not designed to offer resistance to bending [9][10]. Stress distribution in vessel is dependent on geometric discontinuities like, vessel heads, supports, attachments like nozzle, operating conditions. For thick walled vessel ($R_m/t<10$, where R_m is mean radius and t is thickness of pressure vessel), the radial stress cannot be ignored like in thin walled vessels. Radial and hoop stress can be calculated from eq. 1 & 2 for thick cylinders. There is different mathematical formulation from those used in finding "membrane stresses" in thin shells. Since ASME Code, Section VIII, Division [1], is basically for design by rules. A higher factor of safety is used to allow for the "unknown" stresses in the vessel. This higher safety factor, which allows for these unknown stresses, can impose a penalty on design but requires much less analysis [10]. Equation 3 simply calculates thermal stresses which are dominant on mechanical/structural stresses.

$$\sigma_{thermal} = E\,\alpha\,\Delta T = 748\text{MPa} \quad (3)$$

Where "E" is modulus of elasticity and "α" is coefficient of thermal expansion. If the ends of the cylinder are capped, must include longitudinal stress σ_l from equation 4.

$$\sigma_l = \frac{p_i r_i^2 - p_o r_o^2}{r_o^2 - r_i^2} \quad (4)$$

Therefore combined effect of thermal as well as structural load will be 771MPa. This direct method cannot be used for stress calculations. Hot oil is flowing across the pressure vessel; therefore heat transfer through convection should be incorporated.

Table 2: Calculation of heat transfer coefficient "h"

ρ Kg/m³	*Pr. No. $C_p\mu/k$*	*Mass flow rate Kg/h*	*Orifice area (m²)*
854	5.95	800	11e-3
947.8	9.34	800	11e-3

Velocity of oil (V) m/s	*Reynold No. [(ρVD)/ μ]*	*Nusselt No. (Nu)*	*"h" W/m².K*
2.3	90238	447.5	365
2.07	43507	329	310

For 20,000 < Re < 400,000 > Pr 0.02, eq. 5 is used to calculate Nusselt no. (Nu) calculations [11].

$$Nu = 0.3 + \frac{0.62 Re^{1/2} Pr^{1/3}}{\left[1 + \left(\frac{0.4}{Pr}\right)^{2/3}\right]^{1/4}} \left\{1 + \frac{Re}{282000}\right\}^{1/2} \quad (5)$$

Thermal analysis of pressure vessel with uniform thickness and various heat transfer coefficients shows clearly the effect of velocity of working fluid.

Published By:
Blue Eyes Intelligence Engineering
and Sciences Publication (BEIESP)

If there is no velocity, there will be no heat transfer coefficient; higher velocities will give higher heat transfer coefficient and higher thermal stresses [12]. It is clearly shown in Figure 8 and convective heat coefficient is calculated in Table 2.

Table 3: Material properties of pressure vessel

Material	ρ Kg/m^3	"h" K^{-1}	Specific heat J/Kg-K	Young's modulus, "E"GPa	Poisson's Ratio
SS 304	8000	17e-6	400	200	0.3
Temperature "°C"		**25**	**100**	**200**	**250**
Thermal conductivity W/m/K		14	15	17	18

Table 4: Thermal and structural loadings

Design pressure in Vessel	Design pressure in Jacket
5 MPa	0.5 MPa
Design temperature	**Working fluid**
250°C	Hydrogen

IV. DISCUSSION OF RESULTS

Structural analysis (FEA) was conducted for 03 cases of a pressure vessel containing hydrogen with internal pressure of 5 MPa and oil temperature of 250°C.

Case 1: Couple field analysis of initial pressure vessel design (non-spherical end)

Case 2: Couple field analysis of ellipsoidal end pressure vessel.

Case 3: Couple field analysis of spherical end pressure vessel with variable thicknesses.

Following are details of the meshed model using solid elements:

a. Number of elements = 24662
b. Number of nodes = 25946

The FEA with various cross-sectional geometries of pressure vessel, it is evident that geometric discontinuity is one of the important factors to be studied. According to analysis of case 01, Figure 10 clearly shows the contours of tangential stress levels in initial design of pressure vessel. This design seems to be stronger due to more material at base. Stress magnitude is higher to the levels of 258MPa and mostly concentrated on the cross-sectional transition point. According to case 02, Figure 11 shows abrupt change in geometry (ellipsoidal) ends of the pressure vessel causing stress concentrations. Also it is seen that the maximum stress at junction of cylinder and cap drops effectively by introducing uniform thickness [13]. Finally, analysis of case 03 for spherical end pressure vessel shown in Figure 13, hoop stress reduces to 30.5MPa, for 13.5mm thick pressure vessel.

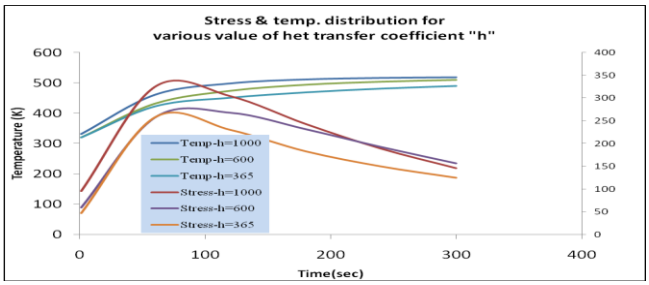

Figure 8: Stress variation with "h" variation

As from above discussion, thermal load is the major contributor in rising stress levels. From instant at which fluid-material interaction occurs, stress level is maximum (say 0-120 sec). Also stress reduces with the decrease in temperature difference between working fluid and material due to reduction in temperature difference which is the main cause of stress as shown in equation No. 3. Therefore load from thermal analysis at 5 sec is imported in couple field analysis as shown in Figure 12. Increase in vessel thickness is another effective way to reduce stress level, keeping in view that there should be enough thickness of pressure vessel to counter buckling and fatigue effects.

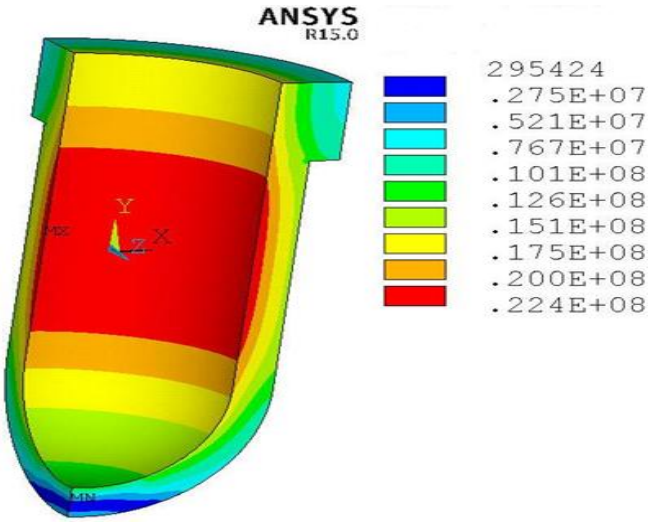

Figure 9: Stresses under 5MPa load (structural load only)

Figure 18 shows a comparison of stresses in initial design and optimized design of pressure vessel. It is clearly evident that by removing geometric discontinuities, stress levels can be reduced. Reduction of stress levels occurs with increase in cross-sectional thickness of pressure vessel [14]. Figure 19 shows the level of hoop stress and von-mises with various cross-sectional thicknesses.

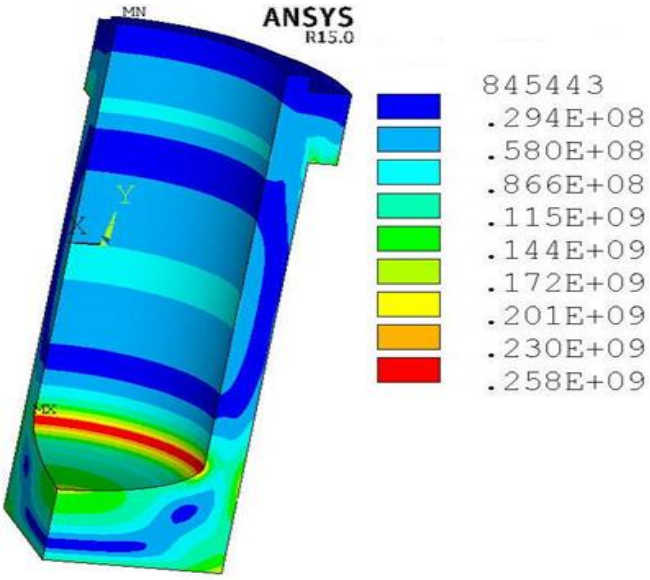

Figure 10: Stresses in Initial pressure vessel design due to coupled-field analysis

Published By:
Blue Eyes Intelligence Engineering
and Sciences Publication (BEIESP)

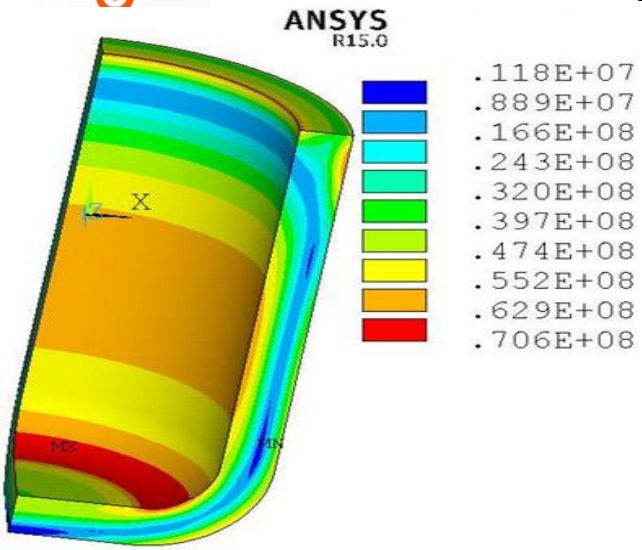

Figure 11: Ellipsoidal end with uniform vessel thickness

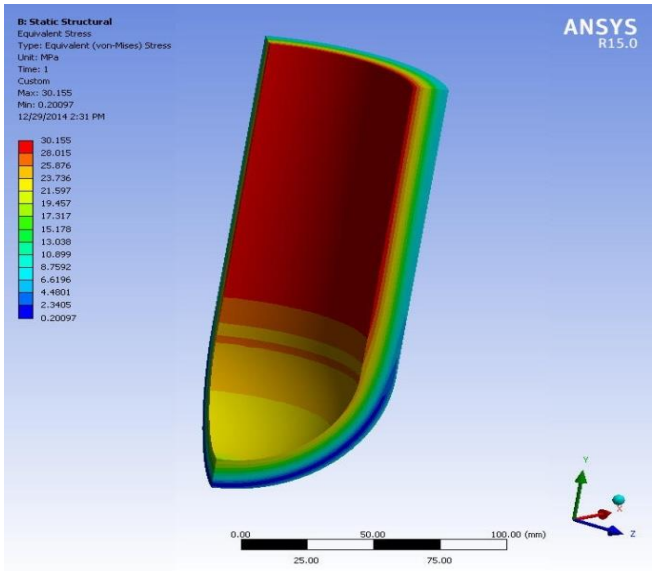

Figure 12: Von-mises due to couple field analysis of 13.5 mm thick pressure vessel after 5 sec of hot oil interaction

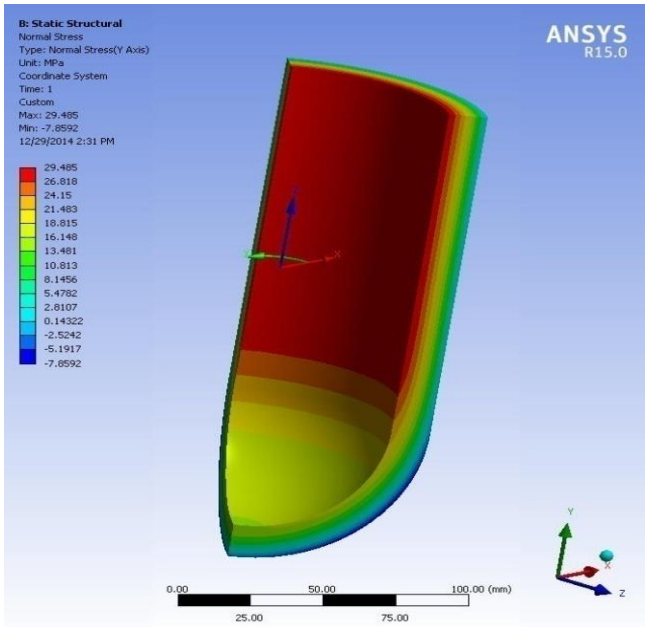

Figure 13: Hoop stress due to couple field analysis of 13.5mm thick pressure vessel after 5 sec of hot oil interaction

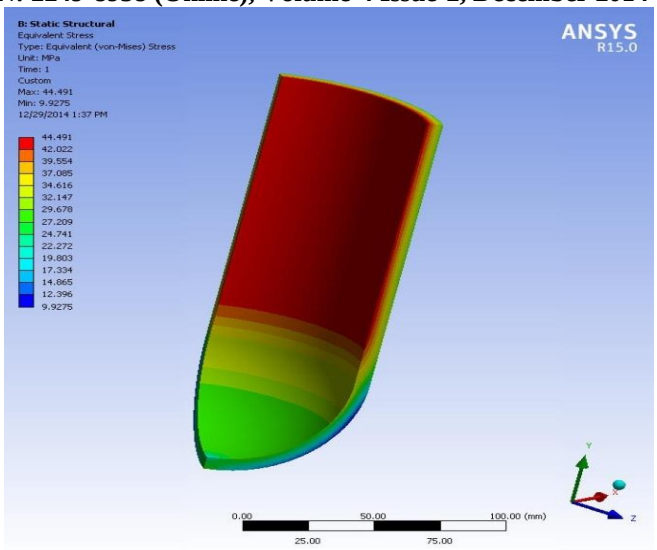

Figure 14: Von-mises stress due to couple field analysis of 6 mm thick pressure vessel after 5 sec of hot oil interaction

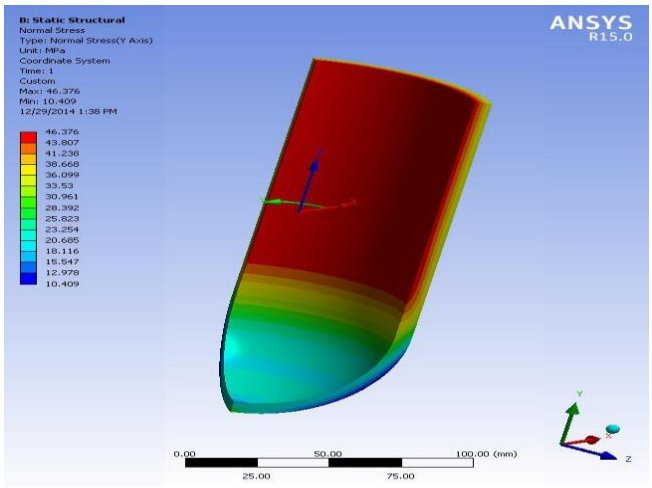

Figure 15: Hoop stress due to couple field analysis of 6mm thick pressure vessel after 5 sec of hot oil interaction

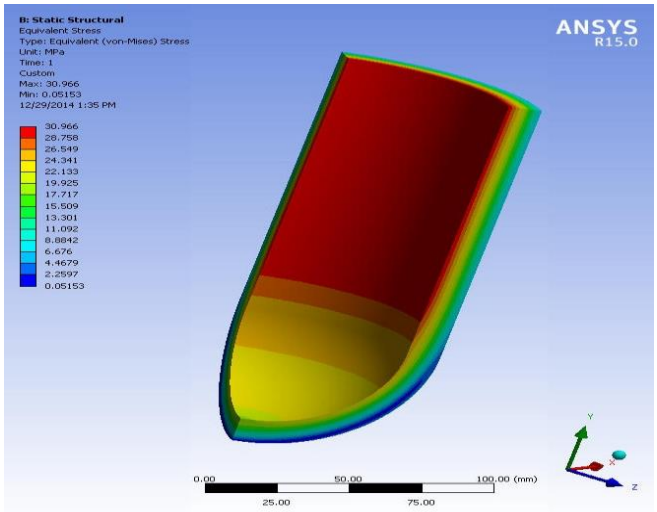

Figure 16: Von-mises stress due to couple field analysis of 8.5 mm thick pressure vessel after 5 sec of hot oil interaction

Published By:
Blue Eyes Intelligence Engineering
and Sciences Publication (BEIESP)

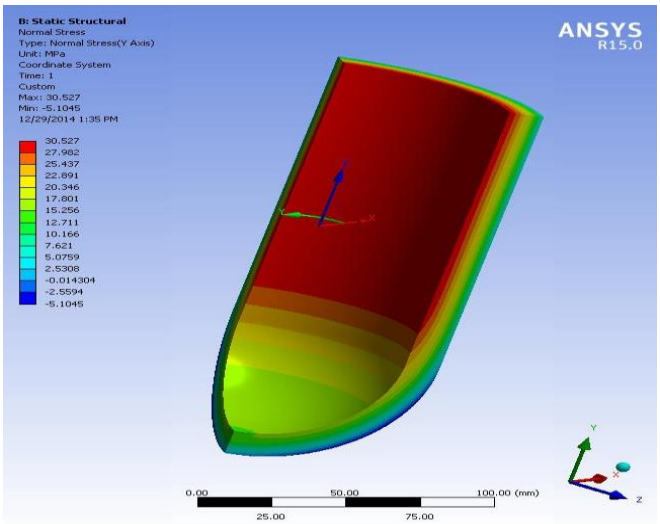

Figure 17: Hoop stress due to couple field analysis of 8.5 mm thick pressure vessel after 5 sec of hot oil interaction

Hyder [15] performed the optimization for the location and size of opening (hole) in a pressure vessel cylinder using ANSYS. Analysis was performed for three thick-walled cylinders with internal diameters 20, 25 and 30 cm having 30 cm height and wall thickness of 20 mm. It was observed that as the internal diameter of cylinder increases the Von Misses stress increases. Optimization of hole size was carried out by making holes having diameter of 4, 8, 10, 12, 14, 16 and 20 mm located at center in each of the three cylinders, and it is observed that initially Von Misses stress decreases and then become constant with hole size.

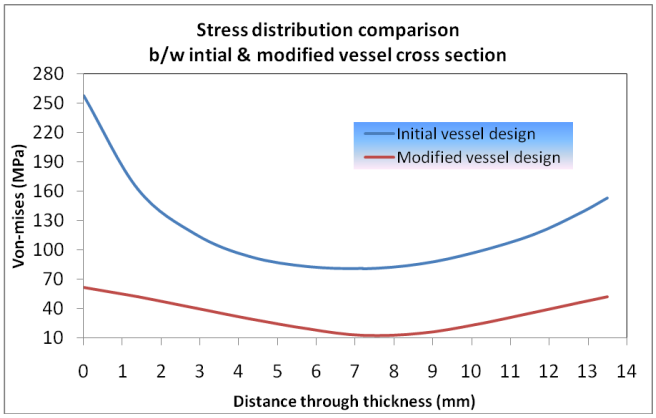

Figure 18: Stress variation through vessel thickness

Quider [16] presented work on stress concentration factor (SCF) analysis of a pressurized vessel–nozzle intersection with wall thinning damage. Among the significant observations was the systematic rise in the SCF value with an increase in the diameter ratio d/D, for a specified vessel diameter-thickness ratio D/T. It was also observed that for as specified d/D ratio, the SCF value increases as the D/T ratio is increased.

V. CONCLUSIONS

Stress Concentration is one of the important factors to be studied in the pressure vessels. Majority of the researchers have worked on thick cylinders and there is a scope in working for thin cylinders. Also the effect of end covers on the position and size of the openings needs to be studied. Comparison of pressure vessel with three different cross-sections clearly concludes that geometric discontinuity causes abrupt rise in stress levels due to concentrations as shown in Table 5. Pressure vessels are usually designed for both structural as well as thermal loads. As far as thermal load is concerned which is far ahead dominant on structural loadings, it is important to address the actual phenomenon of heat transfer through material for a realistic analysis. Cross-sectional geometry of the vessel plays critical role in life estimation. Another Case with reduced thickness of pressure vessel (13.5mm to 6mm) was analyzed which shows increase in stresses like 46MPa as shown in Figure 14 and 15. The effect of reduction in pressure vessel thickness, is undeniable but not on the cost of pressure vessel life. Hoop stress increases with decrease in thickness of pressure vessel as shown in Figure 19.

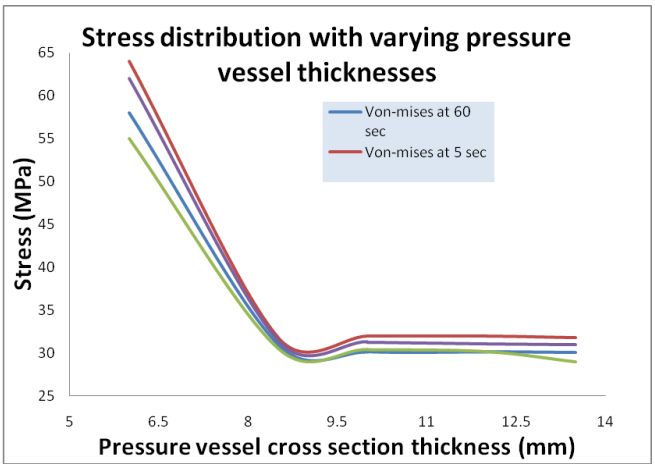

Figure 19: Stress variation with various pressure vessel thicknesses

There is a certain thickness of pressure vessel after which slope of the hoop stress graph become nearly zero as shown in Figure 19. Therefore for optimized design, 8.5mm thickness of vessel can be considered as safe. After reducing more thickness, abrupt rise in hoop as well as von-mises stress occurs.

Table 5: Stresses in various pressure vessel designs:

Stress (MPa)	*Non-spherical ends*	*Ellipsoidal ends*
Hoop	258	70.6
Von-mises	260	72

Spherical ends with Thermal load at 05 sec				
6mm	**8.5mm**	**10mm**	**12mm**	**13.5mm**
44	31	30	31	30.5
46	30.5	29.3	30.5	29

REFERENCES

[1] ASME boiler and pressure vessel code section VIII, division 2, 2001
[2] Shyam Gupta, " Optimize nozzle location for minimization of stress in pressure vessel", IJIRST- International Journal for Innovative Research in Science and Technology, Vol. 1, Issue 1, June 2014, ISSN(online)L:2349-6010
[3] Avinash Kharat, V.V.Kulkarni, "Stress concentration at openings in Pressure Vessels-A Review", International Journal of innovative research in science, engineering and technology. vol. 2, issue 3, March 2013.

Published By:
Blue Eyes Intelligence Engineering
and Sciences Publication (BEIESP)

[4] A. Th. Diamantoudis, Th. Kermanidis, Design by analysis versus design by formula of high strength steel pressure vessels: a comparative study, International Journal of Pressure Vessels and Piping 82 (2005) 43–50.
[5] You-Hong Liua,*, Bing-Sheng Zhangb, Ming-De Xuec, You-Quan Liu, Limit pressure and design criterion of cylindrical pressure vessels with nozzles, International Journal of Pressure Vessels and Piping 81 (2004) 619–624.
[6] T. Aseer Brabin a, T. Christopher b, B. Nageswara Rao, Finite element analysis of cylindrical pressure vessels having a misalignment in a circumferential joint, International Journal of Pressure Vessels and Piping 87 (2010) 197-201
[7] V.N. Skopinsky and A.B. Smetankin, "Modeling and Stress analysis of nozzle connections in ellipsoidal heads of pressure vessels under external loading", Int. J. of Applied Mechanics and Engineering, 2006, vol.11, No.4, PP-965-979.
[8] J. Btachut, K. Magnucki, "Strength, stability, & Optimization of pressure vessel: Review of selected problem", Applied Mechanical Reviews, November 2008, Vol. 61.
[9] NASA SP-8083, "Discontinuity stresses in metallic pressure vessels"
[10] DENNIS MOSS, "Pressure vessel design manual"
[11] Holman, J.P., Heat Transfer, McGraw-Hill, London.
[12] Basavraj R. Birajdar, Srinath E. Gudur, "Computation of thermo-mechanical stresses in pressure vessel using ANSYS", International Journal of advance research in science and engineering, IJARSE, Vol. No. 2, Issue No. 8, August 2013
[13] Mohammad Z. Kabir, "Finite element analysis of composite pressure vessels with a load sharing metallic liner", ELSEVIER Composite Structures 49 (2000) 247±255
[14] Javad Marzbanrad" Finite element analysis of composite high-pressure hydrogen storage vessels" J. Mater. Environ. Sci. 4 (1) (2013) 63-74 ISSN: 2028-2508 CODEN: JMESCN
[15] M. Javed Hyder, M. Asif, "Optimization of location & size of opening in pressure vessel cylinder using ANSYS", Engineering Failure Analysis 15, 2008, pp 1-19.
[16] M. Quider, "SCF analysis of a pressurized vessel-nozzle intersection with wall thinning damage", International Journal of Pressure Vessels and Piping, 2009, Vol.86, PP 541-549.

Mutahir Ahmed, I have been working in the field of finite element modeling and analysis of various mechanical and aerospace structures for the last eleven years and so. I have carried out involved analyses of various complex structures in the fields of solid mechanics and turbo machinery. During MSc in mechanical field with specialization in aerospace, I worked on "Design and simulation of flow though sub-sonic axial flow compressor". In project, aerodynamic design of a subsonic single stage axial flow compressor was studied and subsequently validated by developing a computational fluid dynamics (CFD) based simulation code. Initially, thermodynamics and fluid dynamics involved in the flow through a compressor were studied.

Published By:
Blue Eyes Intelligence Engineering
and Sciences Publication (BEIESP)