International Journal of Engineering and Advanced Technology (IJEAT)
ISSN: 2249-8958 (Online), Volume-3 Issue-4, April 2014

Advanced Paper Cutting Machine using ARM7

S.S. Lavhate, Saurabh R. Keskar, Vishal P.Unhale, Avinash Sangale

Abstract- The proposed system will be an intelligent automated length measurement device composed of the rotary encoder, proximity switches, motor and embedded design consisting microcontroller with digital circuitry etc. this device used as control panel of paper cutting machine, which is used to cut the various kind of paper products, plastic, thin film, leather, slice of nonferrous metal etc. This system can be applicable in paper cutting industry and proves how it can be a low cost solution in the production practice.

Key Points: Cutting, Rotary encoder, Safety, touch screen.

I. INTRODUCTION

Traditional hand lever cutting machine has drawbacks viz. it doesn't provide safety to operator. It is not user friendly as every time user has to adjust the paper to desired cut position and hold the paper before taking cut. It is very time consuming and tedious process to take a job with different cut size so such machine also accuracy job taken on this machine depends on operators skills.

To overcome problems advance paper cutting machine controller c be used. It is semiautomatic programmable unit equipped with very simple and user friendly control panel. It has got wide application area in books or notebook manufacturing industry, visiting cards or labels manufacturing industry etc.

II. LITERATURE SURVEY

Traditional hand lever paper cutting machine has drawbacks viz. it doesn't provide any safety to operator. It is not user friendly as every time operator has to do adjust the paper to desired cut position & hold the paper before taking the cut. It is very time consuming & tedious process to take a job with different cut sizes on such machine also accuracy of job taken on such machine depends on operator's skill.

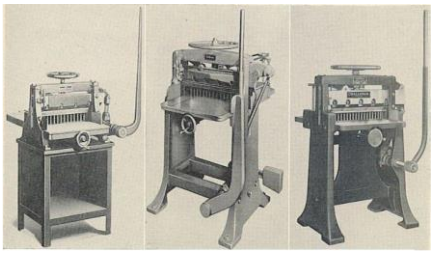

Fig.1 Hand Lever Paper Cutting Machine

Manuscript published on 30 April 2014.
* Correspondence Author (s)
S.S.Lavhate, Associative Professor, Department of ETC, P.R.E.C. Loni, Ahmednagar, India
Keskar Saurabh Rajendra, Department of ETC, P.R.E.C. Loni, Ahmednagar, India
Unhale Vishal Popat, Department of ETC, P.R.E.C. Loni, Ahmednagar, India
Sangle Avinash Ramchandra, Department of ETC, P.R.E.C. Loni, Ahmednagar, India

To overcome above problems intelligent paper cutting machine controller can be used. It is semiautomatic programmable unit equipped with very simple and user friendly control panel. It has got wide application area in books or notebook manufacturing industry, corrugated box manufacturing industry, visiting cards or labels manufacturing industry etc.

It has a 5" colour graphic display interface, memory for 64000 cut positions, automatic push out & air table control which provides easiness in cutting and handling bulky jobs. System provides production control by storing the operator's log of no. of cuts taken in a shift with date & time stamp.

III. OBJECTIVES OF THE PROJECT

1. Objective of this project is to design, fabricate and automate the paper cutting machine in such a way that the required length of paper of size a4 can be cut.
2. The paper cutting machines generally available in the market are generally manual and if automatic then it is very costly. Objective is to develop, the kind of paper cutting machine which is automatic and less costly.

IV. BLOCK DIAGRAM

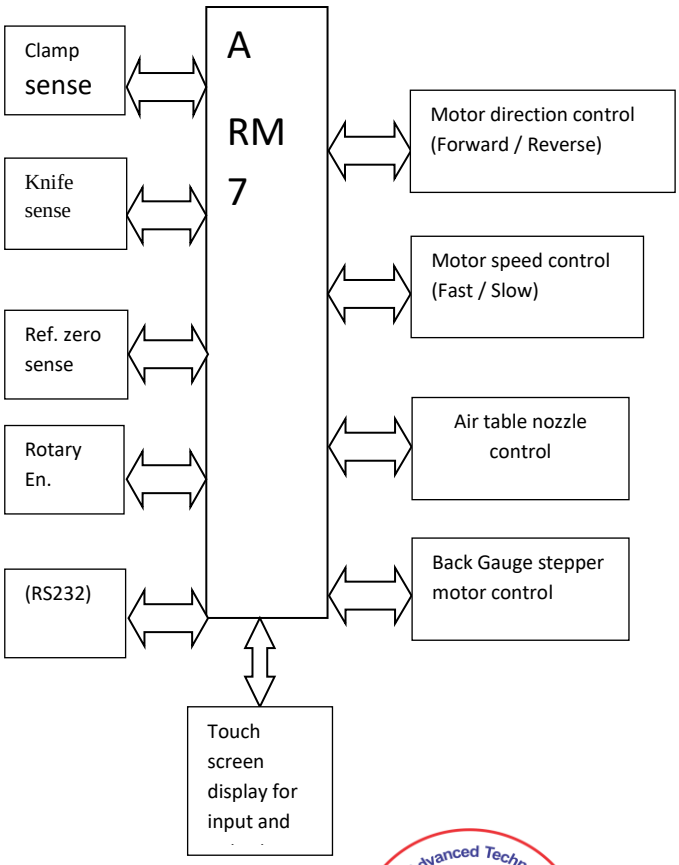

Published By:
Blue Eyes Intelligence Engineering and Sciences Publication (BEIESP)

V. BLOCK DIAGRAM DISCRIPTION

Controller: - ARM7 is selected as controller. This generation introduced the Thumb 16-bit instruction set providing improved code density compared to previous designs. The most widely used ARM7 designs implement the ARMv4T architecture, but some implement ARMv3 or ARMv5TEJ. All these designs use a Von Neumann architecture, thus the few versions comprising a cache do not separate data and instruction caches. Some ARM7 cores are obsolete. One historically significant model, the ARM7DI[1] is notable for having introduced JTAG based on-chip debugging; the preceding ARM6 cores did not support it. The "D" represented a JTAG TAP for debugging; the "I" denoted an Icebreaker debug module supporting hardware breakpoints and watch points, and letting the system be stalled for debugging. Subsequent cores included and enhanced this support. It is a versatile processor designed for mobile devices and other low power electronics. This processor architecture is capable of up to 130 MIPS on a typical 0.13 µm process. The ARM7TDMI processor core implements ARM architecture v4T. The processor supports both 32-bit and 16-bit instructions via the ARM and Thumb instruction sets

Rotary Encoder: A **rotary encoder** also called a shaft encoder is an electro-mechanical device that converts the angular position or motion of a shaft or axle to an analog or digital code. There are two main types: absolute and incremental (relative). The output of absolute encoders indicates the current position of the shaft, making them angle transducers. The output of incremental encoders provides information about the motion of the shaft, which is typically further processed elsewhere into information such as speed, distance, and position. Rotary encoders are used in many applications that require precise shaft unlimited rotation—including industrial controls, robotics, special purpose photographic lenses,[1] computer input devices (such as opt mechanical mice and trackballs), controlled stress rheometers, and rotating radar platforms.

In this project rotary encoder is used for measurement of accurate displacement of the paper.

Touch Screen:-A **touchscreen** electronic visual display that the user can control through simple or multi-touch gestures by touching the screen with one or more fingers. Some touchscreens can also detect objects such as a stylus or ordinary or specially coated gloves. The user can use the touch screen to react to what is displayed and to control how it is displayed.

In this project touch screen is used for giving inputs, selecting modes etc.

Stepper Motor:-Stepper motor is used for the back gauge shifting, which shifts paper with accurate distance. Rotary encoder is attached to the stepper motor to measure distance and give digital output.

DC motor:-DC motor is connected to knife through conveyor belt. DC motor controls knife movements. Motor speed is controlled by ARM.

RS-232: To provide remote programming facility. Optional Ethernet interface can be provided to increase the remote programming distance.

VI. PRINCIPLE OF DISPLACEMENT MEASUREMENT

Lead Screw:

Usually using mechanical means viz. racks and pinions or lead screws and rotary encoder, one can measure straight-line or linear motion. In our application we are using lead screw for translating turning motion into linear motion. It is often assumed that the pitch (threads per linear distance) is precisely known. This assumes the pitch is constant at every location along the lead-screw.

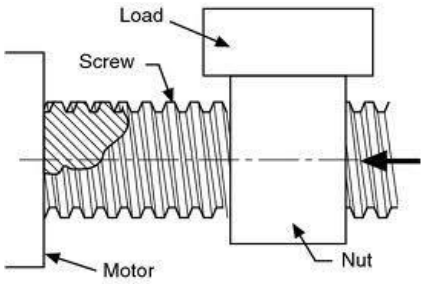

Fig.2 Lead Screw Motor Coupling

Calibrating the number of pulses per unit of measure involves selecting the proper transducer and may include a separate calibration step. The relationship between resolution, lead screw pitch, and rotary encoder's PPR is shown below.

$$Resolution = \frac{1}{PPR \times Lead\ Screw\ Pitch}$$

$$PPR = \frac{1}{Resolution \times Lead\ Screw\ Pitch}$$

Example:

Let lead screw pitch is 10 which means it moves the bed 1/10th inch for every revolution. That means Linear displacement = 0.1″per revolution. Assume desired system resolution is 0.000 1″ then required encoder PPR will be, 0.1/ 0.000 1 = 1000 counts per revolution.

VII. FUNCTIONAL OVERVIEW

Controller unit basically controls the position of the back gauge according set cut size. Unit cut size can accept cut size in millimetre unit or inch unit. Unit will have resolution of 0.01mm measurement.

System will have five modes of operation –

Setup Mode, Program Mode, Semi-Auto mode, Manual Mode, Teach Mode

1. Setup Mode – It is a cutting machine configuration mode. Here user can set the machine configuration parameters viz. lead screw pitch, rotary encoder PPR, min. cut size, max. Cut size, knife change alarm, push out size, motor brake limit, position tolerance etc.

Published By:
Blue Eyes Intelligence Engineering
and Sciences Publication (BEIESP)

2. Program mode – here user can create up to 200 programs each of which can have cut positions. Unit has built in calculator which can be accessed during programming to set the cut sizes. User can make program for label cutting easily- just by feeding total paper size & label cut size. Operator can change the program setting on-line or by remote programming through RS-232 or Ethernet. Unique remote programming facility saves operator's time & hence production cost.

3. Semi-auto mode – This mode uses the program made in program mode to execute the job with different cut sizes. This mode saves operator's time in taking jobs with variety of cut sizes.

4. Manual mode – Here firstly user sets the cut size using numeric keypad and then goes for execution Controller unit is featured with colour graphic interface where user can view the progress the process. It provides precise motor motion control with the help of incremental encoder feedback.

5. Teach Mode: This is most important mode of this system that makes it advance. In this mode of operation, run time user can create a program of variable cut sizes. In this mode user first selects empty program and it operates unit same as in manual mode only the difference is once cut is taken by the operator, the achieved position gets saved as a cut size inside the empty program selected.

VIII. PROPOSED MODULES:-

Controller: - ARM7
Rotary Encoder:-
External inputs: - RS-232
Stepper motor: - 15V
DC Motor: - 30V
Display Screen: - 5" Capacitive Touch Screen.

IX. ADVANTAGES:-

1. Reduction in cost as compare to conventional machines.
2. Most main advantage is that machine and record manual cut and repeat it.
3. Reduction of man power.
4. Fast cutting can be done in auto mode.
5. Gross error is reduced in great extent due to no direct human interaction.
6. Instructions can be given by PC using RS232.

X. CONCLUSION:-

This system presents a different approach to make traditional hand lever paper cutter machine intelligent. Controller unit's user friendly interface & Semi-automatic mode saves operator's time, increases productivity & reduces production cost. Also machine can learn new cuts by recording manual cutting.

REFERENCES

[1] Gheorghe Livinţ, VasilHorga, Marcel Răţoi and Mihai Albu Gheorghe Asachi Technical University of Iaşi Romania.
[2] Abdel Azzeh, Richard duke "CAN control system for Electric Vehicle", ENZCon 2005, the 12th Electronics New Zeland Conference. Manukau City, New Zealand, November 2005.
[3] Kumar, M. A.Verma, and A. Srividya, Response-Time "Modeling of Controller Area Network (CAN). Distributed Computing and Networking,

Published By:
Blue Eyes Intelligence Engineering
and Sciences Publication (BEIESP)