International Journal of Engineering and Advanced Technology (IJEAT)
ISSN: 2249-8958 (Online), Volume-3 Issue-4, April 2014

Comparison of the Performance of Microstrip Antenna at 2.4GHz Using Different Substrate Materials

Nandini Ammanagi, Rahul Khadilkar, Akash Harwani, Disha Budhlani, Disha Dembla

Abstract*— This paper discusses the performance of various dielectric substrates, having dielectric constants ranging from 2 to 5. These designs are basically rectangular micro strip patch antennas for wireless communication resonating at 2.4 GHz. They are simulated using the evaluator's version of the software IE3D and their performances are compared with respect to 'return loss v/s frequency' and 'vswr v/s frequency' parameters. The comparison is made for four dielectric substrates: FR4, RO-3003, PTFE(Teflon) and Polyguide. Analysis of each is done and compiled using MATLAB to show relative performance.

***Index Terms*— Antenna, Dielectric substrate, IE3D, Microstrip, Rectangular Patch.**

I. INTRODUCTION

In its most basic form, a micro strip patch antenna consists of a radiating patch on one side of a dielectric substrate which has a ground plane on the other side. A rectangular patch is used as the main radiator. There are several advantages of this type of patch antenna, such as being planar, small in size, simple in structure, low in cost, and easy to be fabricated. Thus, it is attractive for practical applications like Bluetooth, Wi-Fi, Microwave oven, GPS.

A. Antenna Structure

A microstrip patch antenna consists of a very thin metallic patch placed a small fraction of a wavelength above a conducting ground-plane. The patch and ground-plane are separated by a dielectric. The patch conductor is normally copper and can assume any shape, but simple geometries generally are used and this simplifies the analysis and performance prediction. The patches are usually photo etched on the dielectric substrate. There are numerous substrates that can be used for designing of microstrip antennas and their dielectric constants are normally in the range : $2.2 < \varepsilon_r < 12$. The substrate is usually non-magnetic. The ones that are most desirable for antenna performance are thick substrates with their dielectric constants at the lower end which enhances the fringing fields that account for radiation, but higher values may be used in special circumstances [1].

Due to its simple geometry, the rectangular patch is the most commonly used microstrip antenna, characterized by its length L, width W and thickness h, as shown in Fig 1.

B. Feeding Techniques

The simplest method of feeding the patch is by a coplanar microstrip line, photo etched on the substrate. Coaxial feeds are also widely used. The inner conductor of the coaxial-line (sometimes referred to as a probe) is connected to the radiating patch, while the outer conductor is connected to the ground-plane, as shown in Fig 1.1. The antenna used here for comparison is a probe-fed rectangular microstrip patch antenna designed to operate at a frequency of 2.4 GHz [3].

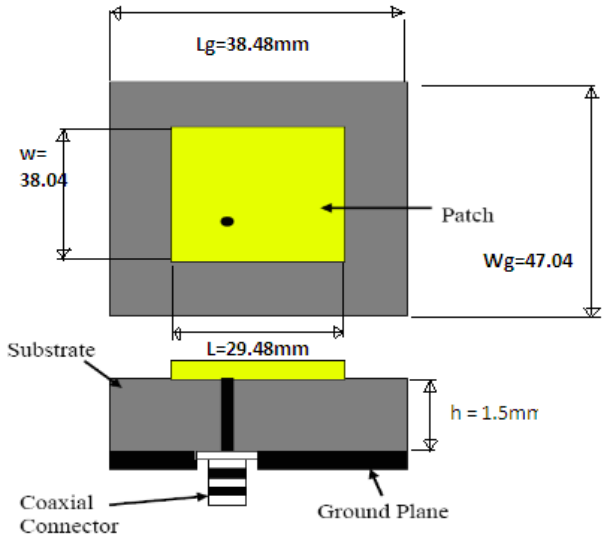

Fig.1 Structure of patch antenna

II. DESIGN CONSIDERATIONS

The designs in this paper are based on the transmission line model of a microstrip antenna. The following formulae were used and basic parameters to design the antenna were calculated for different substrate materials [2]. All symbols have their default definitions unless specified otherwise.

1. $$Width = \frac{c}{2 f_r}\sqrt{\frac{2}{\epsilon_r + 1}}$$

Manuscript published on 30 April 2014.
***** Correspondence Author (s)
Nandini Ammanagi*, Asst. Professor, Department of Electronics and Telecommunication, V.E.S. Institute of Technology, Mumbai, India.
Rahul Khadilkar, student, Department of Electronics and Telecommunication, V.E.S. Institute of Technology, Mumbai, India.
Akash Harwani, student, Department of Electronics and Telecommunication, V.E.S. Institute of Technology, Mumbai, India.
Disha Budhlani, student, Department of Electronics and Telecommunication, V.E.S. Institute of Technology, Mumbai, India.
Disha Dembla, student ,Department of Electronics and Telecommunication, V.E.S. Institute of Technology, Mumbai, India.

Published By:
Blue Eyes Intelligence Engineering and Sciences Publication (BEIESP)

2. $\epsilon_{reff} = \frac{\epsilon_r + 1}{2} + \frac{\epsilon_r - 1}{2}\left[1 + 12\frac{h}{w}\right]^{-1/2}$

3. $L_{eff} = \frac{c}{2 f_r \sqrt{\epsilon_{reff}}}$

4. $\Delta L = 0.412h \frac{[\epsilon_{reff} + 0.3]}{[\epsilon_{reff} - 0.258]} \frac{[\frac{w}{h} + 0.264]}{[\frac{w}{h} + 0.8]}$

5. $L = L_{eff} - 2\Delta L$

6. $L_g = 6h + L$

7. $W_g = 6h + W$

III. SUBSTRATE MATERIALS

Following table shows characteristics of different substrate materials:

TABLE I
SUBSTRATE MATERIAL CHARACTERISTICS.

Substrate	εr	Loss Tangent
FR4	4.2	0.01
RO-3003	3	0.0013
PTFE(Teflon)	2.1	0.00028
Polyguide	2.32	0.0002

IV. METHODOLOGY

The following represents the block diagram of the working of the designed antenna for each case:

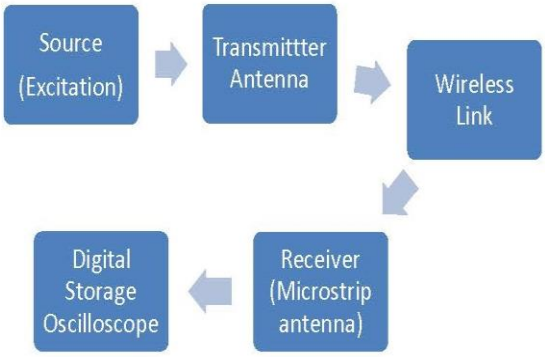

Fig. 2 Functional Block Diagram

The fig.3 indicates the structure of the study before we move on to the analysis of the four substrate materials.

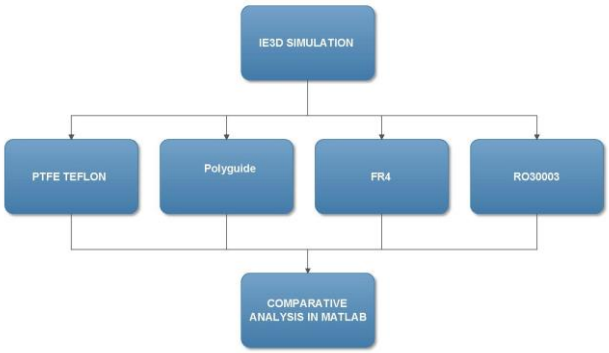

Fig. 3 Structure of study

V. ANALYSIS

Here we present the analysis of performance of various substrate materials using the different dielectric constants and compare the results.

The following graphs simulated on IE3D and combined in MATLAB will show us the comparative performance.

A. Return Loss v/s Frequency

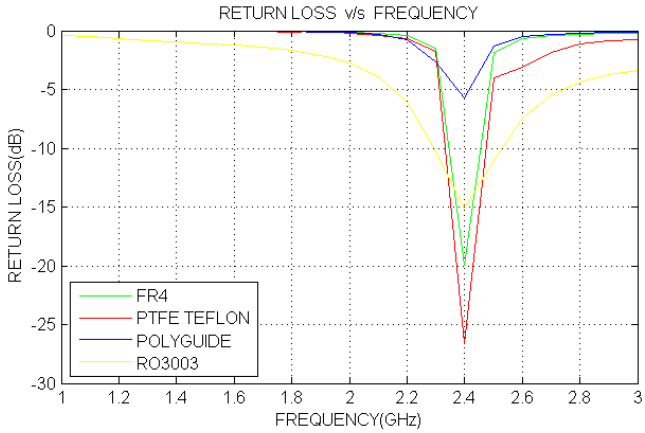

Fig. 4 Return Loss characteristics

B. VSWR v/s Frequency

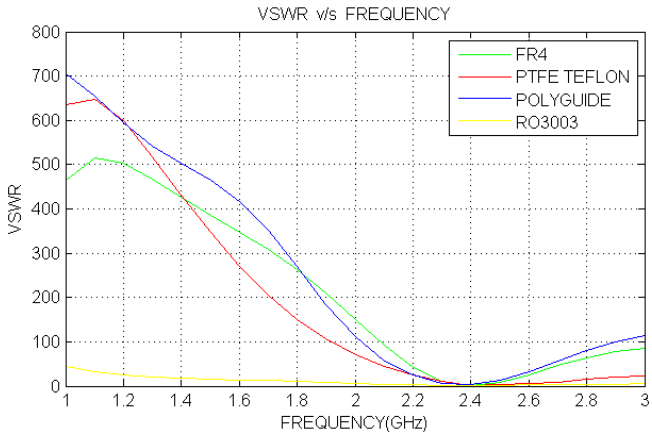

Fig. 5 VSWR Characteristics

C. Bandwidth.

This factor includes the bandwidth of the designed antenna (range of frequencies where S11 greater than 10dB). These will give two frequencies: f_h and f_l .

$$BW = \frac{f_h - f_l}{f_r}$$

TABLE II
BANDWIDTH OFFERED BY THE ANTENNAS*.

Substrate	Bandwidth (in %)
FR4	8.75
RO-3003	10.41
PTFE(Teflon)	11.25

*Polyguide not considered due to poor performance

Published By:
Blue Eyes Intelligence Engineering
and Sciences Publication (BEIESP)

VI. FINDINGS

The following table illustrates the parameters of the substrate showing optimum performance:

Very low return loss indicates that maximum amount of inputted power is converted into electromagnetic waves and very less amount of it is reflected back [4].

TABLE III FINDINGS.

Substrate	ε_r	Δt	S_{11}(dB)	SWR	BW(%)
Teflon	2.1	0.0003	-26.66	1.097	11.25

VII. CONCLUSIONS

As shown above, the graphs indicate the performance of the 4 different substrate materials: FR4, RO3003, PTFE(Teflon) and Polyguide which are used for the designing of microstrip patch antenna.

Thorough analysis of the above resultant graphs indicates that PTFE(Teflon) with dielectric constant 2.1 and loss tangent 0.00028 shows the best performance. All the antennas are resonating at 2.4 GHz and are at a matched impedance of $Z_0 = 50\Omega$. We expect the antenna performance to best the others as the return loss achieves a greater negative value, voltage standing wave ratio achieves a value closer to the ideal value of 1 and the bandwidth achieved being maximum. The return loss achieved for PTFE is of the minimum value of -26.66 dB and SWR value as 1.097 closest to the ideal value of 1. The reason for maximum bandwidth is due to the increase in size of the PTFE(Teflon) based antenna geometry as compared to the other substrate based geometry since bandwidth is directly proportional to antenna dimensions or antenna size[5]. PTFE (Teflon) has the lowest dielectric constant of 2.1 among the all the four substrates which increases the bandwidth since it is inversely proportional to dielectric constant or permittivity. Thus, summing up, PTFE is good dielectric substrate for microstrip patch antenna. Thus, it is suggested that PTFE can be given preference over other three considered substrates.

ACKNOWLEDGMENT

The authors would like to thank the Department of Electronics and Telecommunication - V.E.S. Institute of technology for their support in the making of this paper.

REFERENCES

[1] C. A. Balanis, “Antenna Theory-Analysis and Design,” 2nd ed., J. Peters, John Wiley and Sons, pp. 728-730.
[2] G. Kumar, K. P. Ray, “Broadband microstrip antennas”, Artech House, 2003.
[3] N. Agarwal, D.C.Dhubkarya, R. Mittal,“ Designing \& Testing of Rectangular Micro strip antenna operating at 2.0 GHz using IE3D” , Global Journal of Researches in Engineering, Volume 11 Issue 1, Version 1.0 February 2011, Journal Publisher: Global Journals Inc. (USA)
[4] K.Praveen Kumar, K.Sanjeeva Rao ,V.Mallikarjuna Rao, et al. “The effect of dielectric permittivity on radiation characteristics of co-axially feed rectangular patch antenna: Design & Analysis”, International Journal of Advanced Research in Computer and Communication Engineering Vol. 2, Issue 2, February 2013.
[5] A. Khan,R Nema. "Analysis of Five Different Dielectric SubstratesOn Microstrip Patch Antenna", International Journal of Computer Applications (0975 – 8887), Volume 55, No.18, October 2012.

Nandini Ammanagi: Asst. Professor, Department of Electronics and Telecommunication, V.E.S. Institute of Technology, Mumbai, India.

Rahul Khadilkar: Student, B.E. EXTC, Department of Electronics and Telecommunication, V.E.S. Institute of Technology, Mumbai, India.

Akash Harwani: Student, B.E. EXTC, Department of Electronics and Telecommunication, V.E.S. Institute of Technology, Mumbai, India.

Disha Budhlani: Student, B.E. EXTC, Department of Electronics and Telecommunication, V.E.S. Institute of Technology, Mumbai, India.

Disha Dembla: Student, B.E. EXTC, Department of Electronics and Telecommunication, V.E.S. Institute of Technology, Mumbai, India.

Published By:
Blue Eyes Intelligence Engineering
and Sciences Publication (BEIESP)