International Journal of Engineering and Advanced Technology (IJEAT)
ISSN: 2249-8958 (Online), Volume-3 Issue-3, February 2014

Performance Analysis of Double Pipe Heat Exchanger with Annular Twisted Tape Insert

Snehal S. Pachegaonkar, Santosh G. Taji, Narayan Sane

Abstract-The purpose of this paper is to analyse heat transfer and pressure drop characteristics of Double pipe heat exchanger with annular twisted tape insert. Experiment has been performed on three set-ups: Plain double pipe heat exchanger used as a reference and two different angled twisted tapes inserts. The effect of twist angle on heat transfer coefficient and pressure drop are determined. Experiment using plain pipe is carried out for comparison. The experimental result reveal that both heat transfer coefficient and pressure drop in the pipe with twisted tape, are higher than those in the plain pipe.

Index Terms- Double pipe heat exchanger, twisted tape, heat transfer coefficient, heat transfer enhancement, pressure drop.

I. INTRODUCTION

A large portion of energy being consumed in industry processes and energy resources are depleting at an alarming rate. Energy conservation is therefore, become an important issue. In many areas of the industries, using of high performance heat exchanger is one of the promising energy saving manners.

The high performance heat exchangers can be obtained by utilization of heat transfer enhancement techniques. Heat transfer enhancement is the process of improving the performance of the heat transfer system, by means of increasing heat transfer coefficient. Bergles gives a comprehensive survey of heat transfer enhancement. Heat transfer enhancement creates one or more combinations of following conditions that are favorable for the increase in heat transfer rate with an undesirable increase in friction: (a) interruption of boundary layer development and rising degree of turbulence, (b) increase in heat transfer area, (c) generating of swirling or secondary flows. As the heat exchanger gets older, the resistance to heat transfer rate increases due to fouling or scaling. Also in some industries there is need to increase heat transfer rate in the existing heat exchangers. Therefore to achieve desired heat transfer in an existing heat exchanger, several methods have been investigated in the recent years. These methods are classified as

- Passive techniques
- Active techniques

Passive techniques do not require any direct input of external power; rather they use it from the system itself which ultimately leads to an increase in pressure drop. They generally use surface or geometrical modifications to the flow channel by incorporating inserts or additional devices. They promote higher heat transfer coefficients by disturbing or altering the existing flow behaviour.

Insertion of twisted tape is one of the effective methods to increase heat transfer coefficient with relatively small pressure drop losses.

Manuscript published on 28 February 2014.
* Correspondence Author (s)
Ms Snehal S. Pachegaonkar, Lecturer, Department of Mechanical Engineering, Nutan Maharashtra Institute of Engineering and Technilogy, Talegaon Dabhade, Pune, Maharashtra, India.
Prof. Santosh G. Taji, Professor, Department of Mechanical Engineering, PES's Modern College of Engineering, Shivajinagar, Pune, Maharashtra, India.
Prof. Narayan Sane, Retired Professor, Department of Mechanical Engineering, Walchand College of Engineering, Sangli Maharashtra, India.

II. LITURATURE SURVEY

In a review paper by Liebenberg et al it is shown that a lot of work has been done in heat transfer enhancement on the inner wall of tubes. However, in the case of water heating with refrigerants flowing in an inner tube and water through the annulus, heat transfer enhancement on the outside wall is important. The heat transfer from the refrigerant to the water through the tube is influenced by three components, namely: the thermal convection resistance of the condensing refrigerant on the inside of the inner tube ($1/h_iA_i$), the conduction resistance of the tube wall ($\ln(r_o/r_i)/(2\pi kL)$ and the convection resistance ($1/h_oA_o$) of the water in the annulus. The tube wall is thin and has a high thermal conductivity (k) as it is generally manufactured from copper or stainless steel. The result is that the wall's thermal resistance is negligibly small in comparison with the two convection resistance terms. The heat transfer coefficient of condensing refrigerant (h_i) is usually relatively large in comparison with the convection coefficient (h_o) of the water in the annulus. Therefore, the thermal resistance is the highest on the annulus side of the wall and that is the reason why heat transfer enhancement on the outside wall of the inner tube can make an important contribution to deliver higher hot-water temperatures.

Most of the methods of enhanced heat transfer use the same mechanism to enhance heat transfer, and that is to force the flow in the annulus to rotate. 'Bergles1 has found that devices that induce swirl flow and turbulence in the flowing fluid are particularly attractive enhancement techniques for forced convective systems. Another method that makes use of this principle was recently patented by Meyer and Coetzee2. An angled spiralling tape is used in the annulus to induce swirl. This method of heat transfer enhancement was specifically developed for hot-water heating in heat pumps, although many more applications exist.

The purpose of this paper is to determine the heat transfer and pressure drop characteristics of single phase water in the annulus of the angled twisted tape heat exchanger experimentally.

III. EXPERIMENTAL METHOD

The double-pipe heat exchanger used in experimentation is shown in Figure.1 describes the setup of double-pipe heat exchanger. Water from the tank is first heated and flows in the inner pipe and is then cooled by cooling-water passes.

Published By:
Blue Eyes Intelligence Engineering and Sciences Publication (BEIESP)

It is a double pipe heat exchanger consisting of a test section, rotameters, overhead water tank for supplying water & gyser for hot water, pump & the control system. The test section is a smooth M.S. tube with dimensions of 1500mm length, Inner tube-16.5mm ID, and 21.5mm OD; Outer M.S. pipe-42mm ID, and 48.5mm OD. Two calibrated rotameters are used to measure the flow of cold water and hot water. The water, at room temperature is drawn from an overhead tank using gravity flow. Similarly a rotameter is provided to control the flow rate of hot water from the inlet hot water tank. Hot water flow rate is kept constant at 2LPM and 4LPM. Two pressure tapings- One just before the test section and the other just after the test section are attached to the micromanometer for pressure drop measurement. Four thermocouples measure the inlet & outlet temperature of hot water & cold water. Fig 3. shows photograph of twisted tape inserted in annular core.

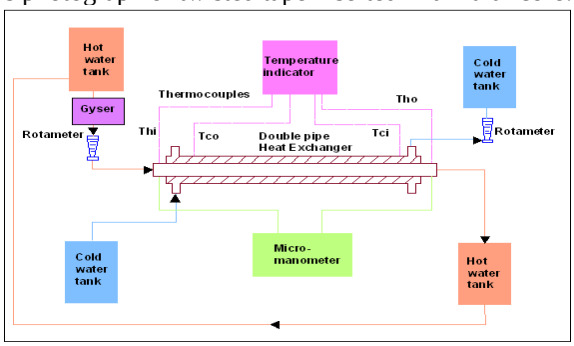

Figure1. Experimental set-up

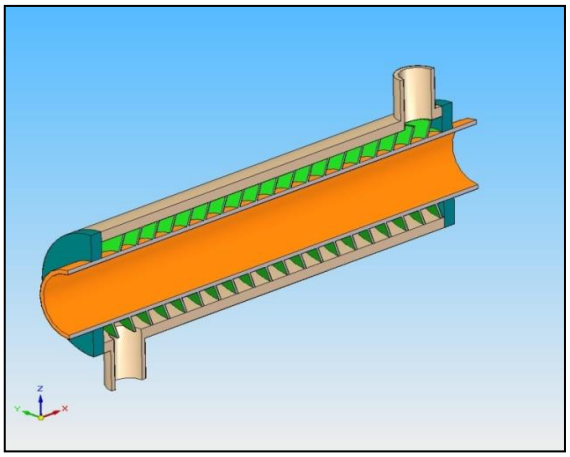

Figure2. Sectional view of test section

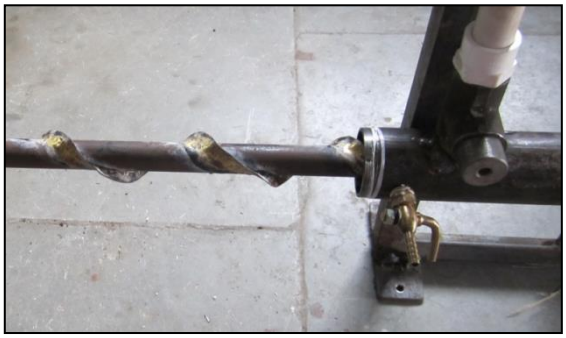

Figure3. Annular twisted tape inserts in central core

Experimental procedure:

1. All the rotameters & RTD are calibrated first.
2. Standardization of the set-up:

Before starting the experimental study on friction & heat transfer in heat exchanger using inserts, standardization of the experimental setup is done by obtaining the friction factor & heat transfer results for the smooth tube & comparing them with the standard equations available.

3. for friction factor determination: Pressure drop is measured for each flow rate with the help of manometer at room temperature.
4. for heat transfer coefficient calculation:

a) The water is heated by using Geyser about 50^0C and allowed to pass through the tube side of heat exchanger in parallel then in counter current direction at a desired flow rate.

b) Cold water at about 26°C is allowed to pass through the annulus side of heat exchanger at different flow rates.

c) The water inlet and outlet temperatures for both hot water & cold water are recorded only after temperature of both the fluids attains a constant value.

d) The procedure was repeated for different cold water flow rates. Two rotameters are used to measure the flow rate of hot and cold water.

Fabrication of twisted tapes

The M.S strip of length 1500mm, width 10mm and thickness 1.8mm were taken. First marking is done on the outer surface of inner pipe on milling machine. Then tape is wound on inner pipe and joined by brazing process. Two tapes with varying twist ratios (y=6.7, y=10.7) and twist angle (45^0 and 60^0) were fabricated giving a total length of 1.5m, which is sufficient enough for the double pipe heat exchanger, used for the experiment.

Types of inserts used

For experimentation, three types of twisted tape inserts made from M.S strips of thickness 1.4 mm were used.

1. Heat Exchanger without Twisted Tape
2. Heat Exchanger with twisted tape of 45^0 Twist Angle
3. Heat Exchanger with twisted tape of 60^0 Twist Angle

The present work deals with finding the friction factor and the heat transfer coefficient for the various types of twisted tapes with twist ratios (y/w=6.7,10.7) and comparing those results with that of plane pipe and finally finding the heat transfer enhancement in comparison to a smooth tube on constant flow rate basis as well as constant pumping power basis. Hot water at room temperature was allowed to flow through the outer pipe while cold water flowed through the annulus side in the parallel and counter current direction.

Table-1: Specification of heat exchanger

Inner pipe (ID)	16.5mm
Inner pipe (OD)	21.5mm
Outer pipe (ID)	42mm
Outer pipe (OD)	48.5mm
Material	M.S

Table-2: Specification of twisted tape

Width (w)	10mm
Pitch (y)	67,107,mm
Twist Ratio (y/w)	6.7, 10.7
Tape thickness (δ)	1.4mm
Heat tranfer lengths	1.5m
Material	M.S

Published By:
Blue Eyes Intelligence Engineering
and Sciences Publication (BEIESP)

IV. DATA REDUCTION

For fluid flows in a concentric tube heat exchanger, the heat transfer rate of the hot fluid (air) in the inner tube can be expressed as:

$$Q_h = m_h \times Cp_h \times (Th_i - Th_o)$$

Where, m_h is mass flow rate of hot water, Cp_h is the specific heat of water, Th_i and Th_o are inlet outlet hot water temperatures, viz.

While the heat transfer of the cold fluid (water) for the outer tube is

$$Q_c = m_c \times Cp_c \times (Tc_o - Tc_i)$$

Where, m_c is mass flow rate of hot water, Cp_c is the specific heat of water, Tc_o and Tc_i are inlet outlet hot water temperatures, viz

The average value of heat transfer rate, supplied and absorbed by both fluids, is taken for internal heat transfer coefficient calculation.

$$Q_{avg} = \frac{Q_h + Q_c}{2}$$

For fluid flow in a double pipe heat exchanger, the heat transfer coefficient (h) is calculated from

$$Q_{avg} = U_o A_o \Delta T_{LMTD}$$

$$Q_{avg} = U_i A_i \Delta T_{LMTD}$$

Where,

$$A_i = \Pi D_i L$$

$$A_o = \Pi D_o L$$

The annulus side heat transfer coefficient is estimated by using the correlation of Dittus-Boelter. The mean value of the Nusselt number is calculated based on the mean wall temperature *Tw* and the local mean bulk fluid temperature.

$$Nu_o = \frac{h_o D_o}{K_o} = 0.023 \, \mathrm{Re}_o^{0.8} \, \mathrm{Pr}_o^{0.3}$$

$$Nu_i = \frac{h_i D_i}{K_i} = 0.023 \, \mathrm{Re}_i^{0.8} \, \mathrm{Pr}_i^{0.3}$$

Then,

$$h_o = \frac{k_o Nu_o}{D_o}$$

$$h_i = \frac{k_i Nu_i}{D_i}$$

The local thermal conductivity (k) of the fluid is calculated from the fluid properties at the local mean fluid temperature. The Reynolds number is based on the different flow rate at the inlet of test section.

$$\mathrm{Re} = \frac{\rho V D}{\mu}$$

Where, μ is the dynamic viscosity of the working fluid.

Friction factor can be written as follows:

$$f = \frac{\Delta P}{\left(\frac{L}{D}\right)\left(\rho \frac{V^2}{2}\right)}$$

Pressure drop coefficient determined from

$$CP = \frac{\Delta P}{\left(\frac{1}{2\rho v^2}\right)}$$

Overall coefficient of heat transfer for

$$Uo_{th} = \frac{1}{\frac{1}{h_o} + \frac{r_o}{r_i} \times \frac{1}{h_i} + \frac{r_o}{k_{MS}} \ln\left(\frac{r_o}{r_i}\right)}$$

$$Ui_{th} = \frac{1}{\frac{1}{h_i} + \frac{r_i}{r_o} \times \frac{1}{h_o} + \frac{r_i}{k_{MS}} \ln\left(\frac{r_o}{r_i}\right)}$$

V. RESULTS AND DISCUSSION

In figure 4 the heat transfer results for two experimental set-ups are plotted against the Reynolds number. The Nusselt number result for plain double pipe heat exchanger is also taken for comparison.

For plain double pipe heat exchanger result shows linear tendency, since the Nusselt number is directly proportional to Reynolds number. The results for heat exchanger with twisted tape has parabolic tendency. In figure 8 the heat transfer result for three set-ups is plotted against the Reynolds number. The Nusselt number for plain double pipe is also shown for comparison. An average increase in Nusselt number is noted for double pipe heat exchanger with twisted tape of twist angle 45^0 than plain double pipe heat exchanger and twisted tape of twist angle 60^0 for counter flow.

From the results obtained it is concluded that the best performance with twisted tape inserted into annulus of double pipe heat exchanger is obtained at twist angle 45^0 due to more swirl and turbulence induced by tape insert.

In Figure 5 the enhancement factor is plotted against Reynolds number of all experiment conducted. The enhancement factor was calculated as the ratio of the measured nusselt number for twisted tape insert to the Nusselt number for plain double pipe heat exchanger. The enhancement factor increased with increase in the Reynolds number. The highest increase in enhancement factor was obtained for 45^0 twisted tape insert and for counter flow.

In figure 6 the pressure drop for the three experimental set-ups with twisted tape is given. Pressure drop and theoretical estimation for plain double pipe heat exchanger also included in results. As Reynolds number increases pressure drop values for three experimental set-ups slightly decreases and then stay constant. The highest increase in pressure drop resulted for 45^0 twisted tape compared to 60^0 twisted tape.

From the experimental results it is concluded that the double pipe heat exchanger with 45^0 twisted tape insert produced optimum performance. The highest increase in Nusselt number over plain double pipe is achieved. Unfortunately the highest increase in pressure drop was also obtained. From the enhancement factor and pressure drop factor results, it can be determined that a higher increase in enhancement factor was achieved related to increase in pressure drop factor.

Published By:
Blue Eyes Intelligence Engineering
and Sciences Publication (BEIESP)

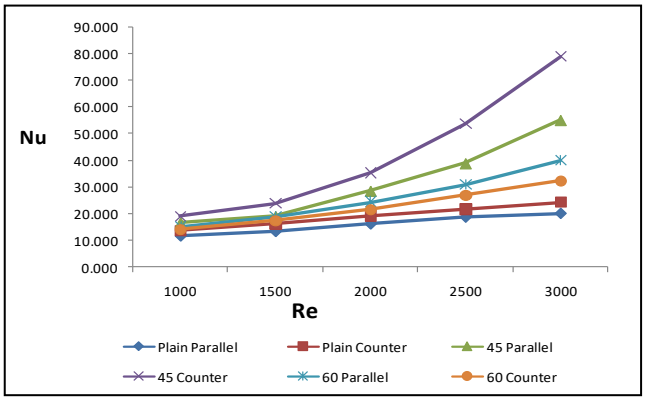

Figure 4. Nusselt number comparison for parallel and counter flow

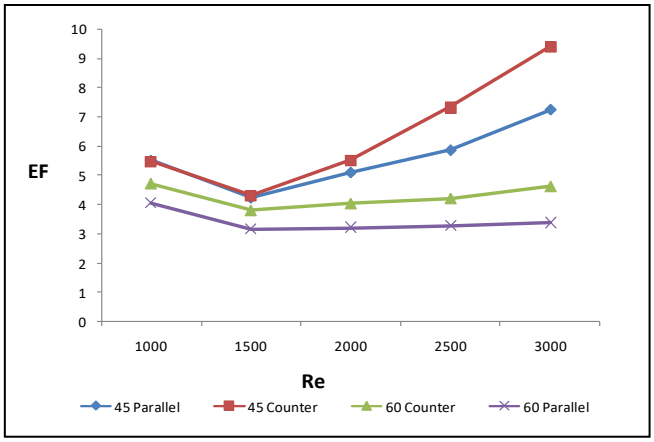

Fig. 5 Enhancement factor comparison for parallel flow and counter flow along twisted tape.

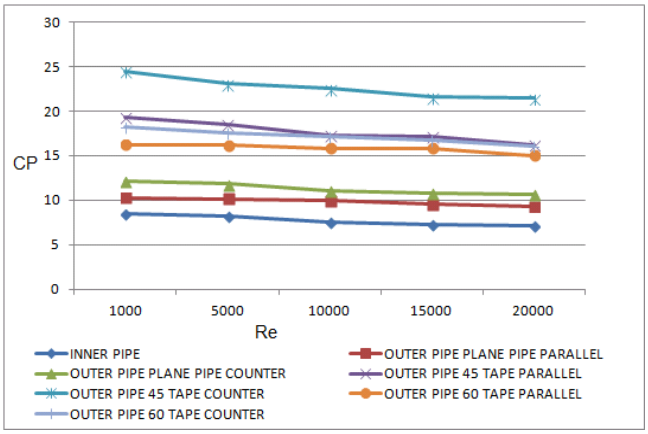

Figure6. Pressure Drop coefficient comparison for parallel and counter flow

VI. CONCLUSION

Experimental investigation of enhancement efficiency, heat transfer characteristics of circular tube fitted with twisted tape inserts of different twist ratios has been investigated. It is observed that the swirl flow helps decrease the boundary layer thickness of the hot water flow and increase residence time of water in the outer tube. The secondary fluid motion is generated by the tape twist, and improves the convection heat transfer.

The Heat Exchanger with annular twist tape of angle 45^0 resulted in highest increase in Nusselt number over Plain double pipe Heat Exchanger and Heat Exchanger with annular twisted tape of angle 60^0. As a penalty this Heat Exchanger also had the highest increase in pressure drop. However, enhancement obtained is higher than the increase in pressure drop. Thus it is concluded that Heat Exchanger with twisted tape of twist angle 45^0 inserted into annulus produced optimum performance.

VII. NOMENCLATURE

Ai =Cross sectional area of inner pipe (m^2)
Cp_i =Heat capacity of the fluid in the inner pipe, (J/KgK)
Cp_o =Heat capacity of the fluid in the outer pipe, (J/KgK)
d_i =Inner diameter of inner pipe, (m)
D_i =Inner diameter of outer pipe, (m)
d_o =Outer diameter of inner pipe, (m)
D_o =Outer diameter of Outer pipe, (m)
h_i =Convective heat-transfer coefficient of fluid in inner pipe, (W/m^2K)
h_o =Convective heat-transfer coefficient of fluid in outer pipe, (W/m^2K)
k =Thermal conductivity of inner pipe material, (W/mK)
L =Total pipe length, (m)
m_i =Mass flow rate of water in inner pipe, (kg/s)
m_o = Mass flow rate of water in outer pipe, (kg/s)
Nu_i =Nusselt number of fluid in inner pipe
Nu_i =Nusselt number of fluid in outer pipe
Pr_i =Prandtl number of fluid in inner pipe
Pr_o =Prandtl number of fluid in outer pipe
Re_i =Reynolds number of fluid in inner pipe
Re_o =Reynolds number of fluid in outer pipe
Th_i =Inlet temperature of hot water, (^0C)
Th_o =Outlet temperature of hot water, (^0C)
Tc_i =Inlet temperature of cold water, (^0C)
Th_o =Outlet temperature of cold water, (^0C)
V_i =Velocity of the fluid in the inner pipe, (m/s)
V_o =Velocity of the fluid in the outer pipe, (m/s)
Q =Heat transfer rate, (m^3/s)
U =Overall heat-transfer coefficient, (W/m^2K)

Greek Symbols

ρi =Density of the fluid in the inner pipe, (Kg/m^3)
ρ_o =Density of the fluid in the outer pipe, (Kg/m^3)
μ_i =Viscosity of the fluid in the inner pipe, (Ns/m^2)
μ_o =Viscosity of the fluid in the inner pipe, (Ns/m^2)

REFERENCES

[1] W. Date,U. N. Gaitonde(1990)"Development of Correlations for Predicting Characteristics of Laminar Flow in a Tube Fitted with Regularly Spaced Twisted-Tape Elements"
[2] Ventsislav zimparov(2003),"prediction factors and heat transfer coefficients for turbulent flow in corrugated tubes combined with twisted-tape insert." Part 1: friction factors
[3] Ventsislav zimparov(2003),"prediction factors and
[4] heat transfer coefficients for turbulent flow in corrugated tubes combined with twisted-tape insert." Part 2: friction factors.
[5] A. W. Date,"prediction of fully-developed flow in a tube containing a twisted- tape."
[6] Experimental studies on heat transfer augmenatation Using modified reduced width twisted tapes (rwtt) as Inserts for tube side flow of liquids gaurav johar & virendra hasda Watcharin Noothong1, Smith Eiamsa-ard2 and Pongjet Promvonge "Effect of Twisted-tape Inserts on Heat Transfer in a Tube"
[7] S. Eiamsa-ard, P. Promvonge, "Enhancement of heat transfer in a tube with regularly-spaced helical tape swirl generators", Solar Energy, Vol. 78, pp. 483–494, 2005.

Published By:
Blue Eyes Intelligence Engineering
and Sciences Publication (BEIESP)

[8] P. Sivashanmugam, S. Suresh, "Experimental studies on heat transfer and friction factor characteristics of laminar flow through a circular tube fitted with helical screw-tape inserts",Applied Thermal Engineering, vol.26, pp. 1990–1997, 2006.
[9] S.K. Agarwal, M. Raja Rao, "Heat transfer augmentation for the flow of a viscous liquid in circular tubes using twisted tape inserts", Int. J. Heat Mass Transfer, Vol. 39,pp. 3547–3557, 1996.
[10] Incropera FP and DeWitt Bergmann Lavine. Introduction to Heat and Mass Transfer, 6th edition, WSE Wiley
[11] High-flux processes through enhanced heat transfer, Arthur E. Bergles, Rensselaer Polytechnic Institute, Troy, NY , University of Maryland, College Park, MD, Massachusetts Institute of Technology, Cambridge, MA
[12] Bergles, A. E. (1985), "Techniques to Augment Heat Transfer ," Handbook of Heat Transfer Applications, 2nd edition, Chapter 1 McGraw-Hill, New York.

Snehal S. Pachegaonkar Qualification: B. E. Mech, Walchand College of Engineering, Sangli (2008); M. E. Heat Power (Appeared), PES'Modern College of Engineering, Pune.
Email: snehal.wce@gmail.com
Ph.: +91 8805277277
4.8 years of experience in teaching. Presently working as an Assistant professor in Department of Mechanical Engineering in NMIET, Pune.

Santosh G. Taji, Ph.D. Scholar, Qualification: B. E. Mech; M. E. Mech.
Email:santosh_taji@yahoo.com
Ph.: +91 9970288348.
Mr. Santosh Taji is a life member of Indian Society of Technical Teachers. His major field of interest is thermal and heat transfer. He has published 07 papers in national conferences and 03 papers in international conferences so far. Presently pursuing PhD under the guidance of Prof. Dr. G.V. Parishwad and Dr. N. K. Sane and is a bonafied student of Govt. College of Engineering, Pune, India. Presently working in Department of Mechanical Engineering, PES Modern College of Engineering, Pune (India)

Recent Papers Published:
1. Mixed convection heat transfer from horizontal rectangular fin array" *Proceedings of the 37th National Conference on Fluid Mechanics and Fluid Power, Govt.COEP, Pune, India, (2009).*
2. Experimental study of mixed convection for narrow band of Richardson number. *Proceedings of the 38th National Conference on Fluid Mechanics and Fluid Power, MANIT, Bhopal, India, (2011).*

Design and development of laminar flow meter and its testing for lower flow rates. *Proceedings of the 38th National Conference on Fluid Mechanics and Fluid Power, MANIT, Bhopal, India, (2011).*

Narayan K. Sane , Qualification: Ph. D. Heat Transfer, I. I. T. Mumbai, (India) 1973.
Research Fellow: The Technical University of Delft, Netherlands.
Presently he is working as adjunct Professor in PES Modern College of Engineering, Pune. He is interested in the area of Thermal Engg. and Heat Transfer. He has Published 12 papers in International Journals; 20 in International conferences; 10 in national journal and 50 in national conferences so far. Dr. Sane is a life member ISTE, ISHMT and former member of JSME, ASHRAE.
Recent Papers Published in International Journals are:
1. S. D. Suryawanshi, N. K. Sane, "Natural convection Heat Transfer from Horizontal Rectangular Inverted Notched Fin Arrays*", Journal of Heat Transfer, ASME, Aug. 2009.*
2. S. V. Dingare, N. K. Sane and R. R. Kulkarni, Computational analysis of effect of positioning pins on natural convection heat transfer in horizontal rectangular plate fin pin fin array, The *Int. Review of Mech. Engg., Praise Worthy Prize,* Vol. 5. n. 3, March, (2011).
3. J. P. Shete, N. K. Sane and S. Pavitran, Computational analysis of mixed convection over heated, vertical rectangular fin array, at Richardson number of unity, The *Int. Review of Mech. Engg., Praise Worthy Prize,* Vol. 5. n. 5, *July,* (2011).

Published By:
Blue Eyes Intelligence Engineering and Sciences Publication (BEIESP)