International Journal of Engineering and Advanced Technology (IJEAT)
ISSN: 2249-8958 (Online), Volume-3 Issue-3, February 2014

Conceptualization and Simulation of an Error Detection and Correction Code for Baseband Data Transmission

A. El Abbassi, A. El Amrani

Abstract*— *The purpose of channel coding is to protect emitted information against perturbations (noise) in the transmission channel, which may alter the contents of the information. This consists of adding redundancies to the signal in order to detect and eventually correct reception errors. In this study, we present a detection and correction code dedicated to baseband transmission. Along this line, we implant a code in a microcontroller circuit both at the emission and reception ends. A coded message is then sent via a simulated chain of transmission and received with an accumulated error. The error is detected and automatically corrected.

Index Terms*— *Channel code, redundancy, microcontroller.

I. INTRODUCTION

The fundamentals laws of information theory are powerful tools for control and data protection against noise and perturbations altering the channel [1]-[2]. The general principle of error detection is to add supplementary bits of data in addition to the message data known as control bits [3]-[5]. The nature of these control bits depends on that of the message data. In order to protect against transmission errors [7], we used a code belonging to the category of line, systematic, and cyclical codes [6]. Cyclical codes are well adapted to the detection and correction of error combinations in comparison with others in the literature [8]-[9]. Polynomial theory and algebraic equations are particularly appropriate for the study of these codes [10]. Not only do these contain base principles, but also provide a means of code construction and error discussion. The length of the emitted information package is 30 bits. The choice of this length is not arbitrary, but it was rather meticulously selected so as to exploit the redundancy [11] introduced into the message. In short, characters are emitted from a PC computer asynchronicly, whereby the message is decoupled into blocks of three characters. Following the elimination of the START and STOP bits of each character, we were able to insert the 6th degree polynomial detector and error corrector in line with the information package. However, we increase the Debit by exploiting the redundancy.

Manuscript published on 28 February 2014.
***** Correspondence Author (s)
A. El Abbassi, Assistant Professor and Researcher at University My Ismail, Faculty of Science and Technology, Department of Physic, Laboratory of Physical Measurement and Instrumentation, Errachidia, Morocco.
A. El Amrani, Assistant Professor and Researcher at University My Ismail, Faculty of Science and Technology, Department of Physic, LPSMS, Errachidia , Morocco.

II. MODELLING

A. Code Generating Polynomial (Polynomial Code Generator)

The code we built C(30,24) consists of words of code of length n=30 bits, of which m=24 bits is useful information and k=n-m=6 bits is the control. The code generating polynomial (Polynomial Code Generator) is defined on the basis of the Galois body and its coefficients and is given by the equation (1).

$$g(x) = x^6 + x^4 + x^3 + x^2 + x + 1 = (1+x^2)(1+x+x^4) \quad (1)$$

Where + designates the addition modulo 2 (XOR)

B. Properties of the Generating Polynomial.

The effectiveness of a code with regard to error detection and correction depends not only on the control bits, but also on the intelligent conception of the generating polynomial. Here, we point out several essential properties of the generating polynomial:

1) The generating polynomial evenly divides into x30+1. In fact, it may be easily verified the equation :

$$x^{30} + 1 = g(x).q(x) \quad (2)$$

Where,

$$q(x) = x^{24} + x^{22} + x^{21} + x^{19} + x^{18} + x^{17} + x^{14} + x^{13} + x^{12} + x^{11} + x^{10} + x^8 + x^5 + x + 1 \quad (3)$$

Therefore this generating polynomial in fact engenders a cyclical code

2) The generating polynomial is a 6th degree polynomial. It is primitive (that is to say it evenly divides into x30+1 without dividing xL + 1 when (L < 30) and contains the factor (1+x2)). It follows then that this code detects all odd-number errors, all doubling errors and all error packets of length less than or equal to 6. It may also be verified that many even-number errors of order greater that 2 possess non-zero syndromes and are consequently detectable.

3) The code directly corrects all simple errors:

There are 31 different possible simple error scenarios which consist of a zero error in each word of code. The necessary condition for correcting such errors has already been satisfied, as the number of syndromes is equal to 26=64>31. In addition, it is easy to verify that all 31 syndromes (words of 6 bits), which result from the 31 binary divisions of word errors of the form E(x) =xi (error in the (i+1)th position) by the generating polynomial, are distinct, allowing for the correction of all simple errors (following the principle of maximum accuracy)

Published By:
Blue Eyes Intelligence Engineering and Sciences Publication (BEIESP)

In addition to simple errors, all configurations of errors which alter the last 6 bits of each word of code are automatically corrected after elimination of the control bits at the level of the receiver.

C. Synthesis information in emission

In order to form the 24 information bit blocs utile firstly and 6 zeros secondly, we have implemented the algorithms in C language program on microcontroller chip. Therefore, we have resolved the redundancy problem, and concepting the emission reception system. At the input emission system the program regrouped three bytes, eliminating start, stop and an intermediary parity. Finally we added six zeros in their places. The figure 1 and figure 2 shows the procedure of the information frame formed.

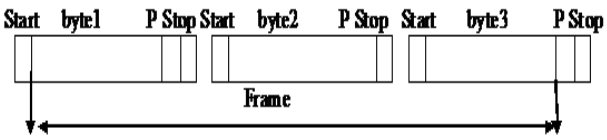

Fig. 1: A party of message formed by program

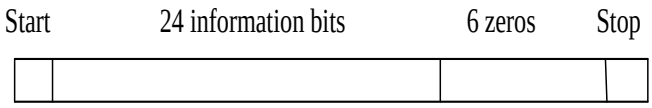

Fig. 2: Bloc to be protected by channel coding

The truth table in figure 3 shows all simple errors, which are directly correctable, and their syndromes.

Syndromes	Errors
111101	0 0 0 0 0 0 0 0 0 0 0 0 0 0 0 0 0 0 0 0 0 0 0 0 0 0 0 0 0 0 0 0 0 0 0 0 1
000111	0 0 0 0 0 0 0 0 0 0 0 0 0 0 0 0 0 0 0 0 0 0 0 0 0 0 0 0 0 0 0 0 0 0 1 0
001110	0 0 0 0 0 0 0 0 0 0 0 0 0 0 0 0 0 0 0 0 0 0 0 0 0 0 0 0 0 0 0 0 0 1 0 0
011100	0 0 0 0 0 0 0 0 0 0 0 0 0 0 0 0 0 0 0 0 0 0 0 0 0 0 0 0 0 0 0 0 1 0 0 0
111000	0 0 0 0 0 0 0 0 0 0 0 0 0 0 0 0 0 0 0 0 0 0 0 0 0 0 0 0 0 0 0 1 0 0 0 0
001101	0 0 0 0 0 0 0 0 0 0 0 0 0 0 0 0 0 0 0 0 0 0 0 0 0 0 0 0 0 0 1 0 0 0 0 0
011010	0 0 0 0 0 0 0 0 0 0 0 0 0 0 0 0 0 0 0 0 0 0 0 0 0 0 0 0 0 1 0 0 0 0 0 0
110100	0 0 0 0 0 0 0 0 0 0 0 0 0 0 0 0 0 0 0 0 0 0 0 0 0 0 0 0 1 0 0 0 0 0 0 0
010101	0 0 0 0 0 0 0 0 0 0 0 0 0 0 0 0 0 0 0 0 0 0 0 0 0 0 0 1 0 0 0 0 0 0 0 0
101010	0 0 0 0 0 0 0 0 0 0 0 0 0 0 0 0 0 0 0 0 0 0 0 0 0 1 0 0 0 0 0 0 0 0 0 0
101001	0 0 0 0 0 0 0 0 0 0 0 0 0 0 0 0 0 0 0 0 0 0 0 0 1 0 0 0 0 0 0 0 0 0 0 0
101111	0 0 0 0 0 0 0 0 0 0 0 0 0 0 0 0 0 0 0 0 0 0 0 1 0 0 0 0 0 0 0 0 0 0 0 0
100011	0 0 0 0 0 0 0 0 0 0 0 0 0 0 0 0 0 0 0 0 0 0 1 0 0 0 0 0 0 0 0 0 0 0 0 0
111011	0 0 0 0 0 0 0 0 0 0 0 0 0 0 0 0 0 0 0 0 0 1 0 0 0 0 0 0 0 0 0 0 0 0 0 0
001011	0 0 0 0 0 0 0 0 0 0 0 0 0 0 0 0 0 0 0 0 1 0 0 0 0 0 0 0 0 0 0 0 0 0 0 0
	0 0 0 0 0 0
010110	0 0 0 0 0 0 0 0 0 0 0 0 0 0 0 0 0 1 0 0 0 0 0 0 0 0 0 0 0 0 0 0 0 0 0 0
101100	0 0 0 0 0 0 0 0 0 0 0 0 0 0 0 0 0 1 0 0 0 0 0 0 0 0 0 0 0 0 0 0 0 0 0 0
100101	0 0 0 0 0 0 0 0 0 0 0 0 0 0 0 0 0 1 0 0 0 0 0 0 0 0 0 0 0 0 0 0 0 0 0 0
110111	0 0 0 0 0 0 0 0 0 0 0 0 0 0 0 0 0 1 0 0 0 0 0 0 0 0 0 0 0 0 0 0 0 0 0 0
010011	0 0 0 0 0 0 0 0 0 0 0 0 0 0 0 0 0 1 0 0 0 0 0 0 0 0 0 0 0 0 0 0 0 0 0 0
100110	0 0 0 0 0 0 0 0 0 0 0 0 0 0 0 0 0 1 0 0 0 0 0 0 0 0 0 0 0 0 0 0 0 0 0 0
110001	0 0 0 0 0 0 0 0 0 0 0 0 0 0 0 0 0 1 0 0 0 0 0 0 0 0 0 0 0 0 0 0 0 0 0 0
011111	0 0 0 0 0 0 0 0 0 0 0 0 0 0 0 0 0 1 0 0 0 0 0 0 0 0 0 0 0 0 0 0 0 0 0 0
111110	0 0 0 0 0 0 0 0 0 0 0 0 0 0 0 0 0 1 0 0 0 0 0 0 0 0 0 0 0 0 0 0 0 0 0 0
000001	0 0 0 0 0 0 0 0 0 0 0 0 0 0 0 0 0 1 0 0 0 0 0 0 0 0 0 0 0 0 0 0 0 0 0 0
000010	0 0 0 0 0 0 0 0 0 0 0 0 0 0 0 0 0 1 0 0 0 0 0 0 0 0 0 0 0 0 0 0 0 0 0 0
000100	0 0 0 0 0 0 0 0 0 0 0 0 0 0 0 0 0 1 0 0 0 0 0 0 0 0 0 0 0 0 0 0 0 0 0 0
001000	0 0 0 0 0 0 0 0 0 0 0 0 0 0 0 0 0 1 0 0 0 0 0 0 0 0 0 0 0 0 0 0 0 0 0 0
010000	0 0 0 0 0 0 0 0 0 0 0 0 0 0 0 0 0 1 0 0 0 0 0 0 0 0 0 0 0 0 0 0 0 0 0 0
100000	0 0 0 0 0 0 0 0 0 0 0 0 0 0 0 0 0 1 0 0 0 0 0 0 0 0 0 0 0 0 0 0 0 0 0 0

Fig. 3: Simple's error and associated syndromes.

III. CONCEPTION OF THE CODER

A. Coding Algorithm

The source delivers data in the form of octets consisting of eight bits of useful information, one start bit (zero) and one or two stop bits (one).

The separable cyclical coding technique consists of:
Multiplying the polynomial i(x) associated with the useful information by x6, which returns to add 6 zeros to the front end of each word of code.

Dividing x6i(x) by the generating polynomial g(x).
Expediting the word of code in the following form:

$$C(x) = x^6.i(x) + r(x) = a(x).g(x) \quad (4)$$

Where r(x) signifies the remainder of dividing i(x) by g(x) and a(x) represents a certain binary polynomial.
This translates onto the following organigram (Fig. 4):

Published By:
Blue Eyes Intelligence Engineering
and Sciences Publication (BEIESP)

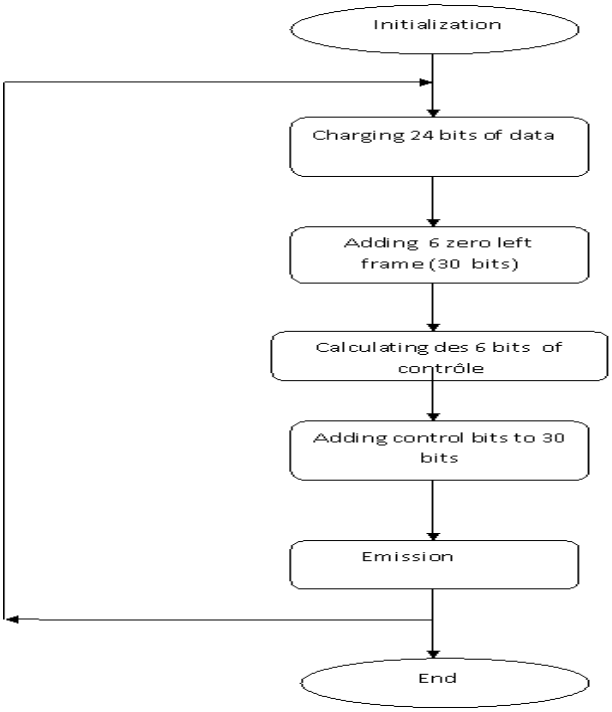

Fig. 4: Organigram explaining the algorithm of Information coding in emission data.

B. Simulation of the chain of transmission with error detection and correction coding(*using isis proteus*)

The message, written in hexadecimal D91F70 via a keyboard piloted by a microcontroller, is coded by our error detection and correction polynomial and displayed on a LCD display of 2x16 characters before being transmitted. The message to be sent after coding is 3647DC20 (figure 5). A robustness C language program traduce the algorithm coding in emission is implemented in microcontroller chip. After emission data along the line transmission, the Debit increase as we transform asynchronous data to synchronous data. In fact, the redundancy is strongly reduced. We have successfully beneficed on to implement generator polynomial in their places.

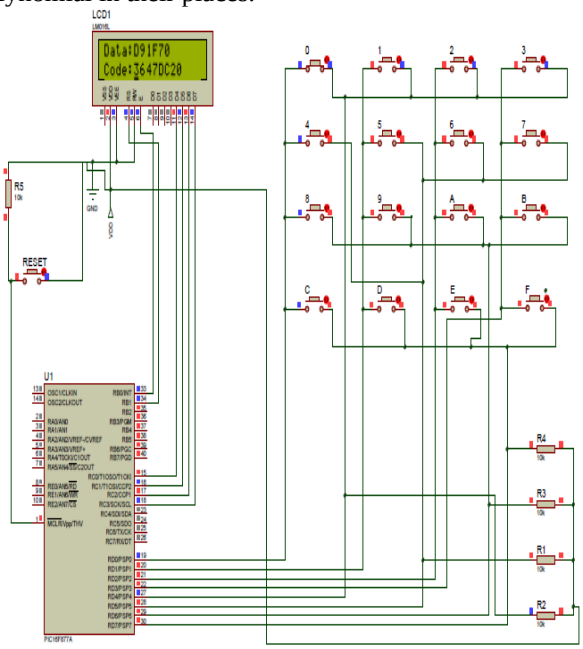

Fig. 5: Emission system of coded message.

IV. ERROR DETECTOR AND CORRECTOR DECODER

A. Error detection

The transmission errors which transform a word of code C of C(30, 24) to another word of code C*, are characterized by error words E of length 30 such that:
Where + is the sum modulo 2.
E may be any one of 230 words of length 30. The possibilities are as follows:

1) E=C0=0 (zero word), where if C=C*: the transmission is correct
2) E≠C0 and E belongs to the code (E), where C≠ C*, but C*..: there is a non-detectable error.

E does not belong to ζ. C≠ C*, the error is detectable.
The non-belonging an error word to the code ζ is a necessary and sufficient condition for detection [7].
If E does not belong to ζ, the polynomial E(x) associated with E is not divisible by g(x). It suffices on the receiving end to divide C*(x) by g(x). The existence of a remainder signifies an error in transmission. Some appropriate logic circuits render the operation automatic.

B. Error correction

The essential decoding operation is the division modulo 2 of the polynomial associated with the word received by the generating polynomial. The error identifier delivers the corresponding error word as a function of the calculated syndrome using the table in figure 3. The syndrome corresponds to the final remainder of the division of the received word by the generating polynomial. The correction properly named, consists of a simple Xor Chip circuit that permits the addition of the error to the received word. The decoding algorithm on the receiving end is given by figure 6.

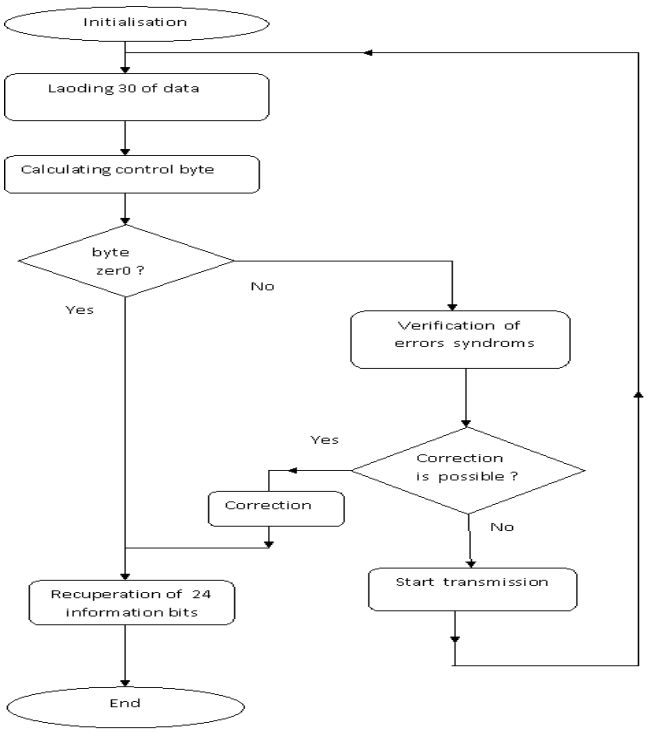

Fig. 6: Organigram explaining the algorithm of Information Decoding in reception data.

Published By:
Blue Eyes Intelligence Engineering
and Sciences Publication (BEIESP)

The received message is 3747DC20. One notes that the error is detected in the second character position (i.e. the character 6 has been transformed into the character 7). Following detection of the error, the message is corrected and displayed on an LCD display at the receiving end which gives the result 3647DC20: a replica of the original message (Figure. 7)

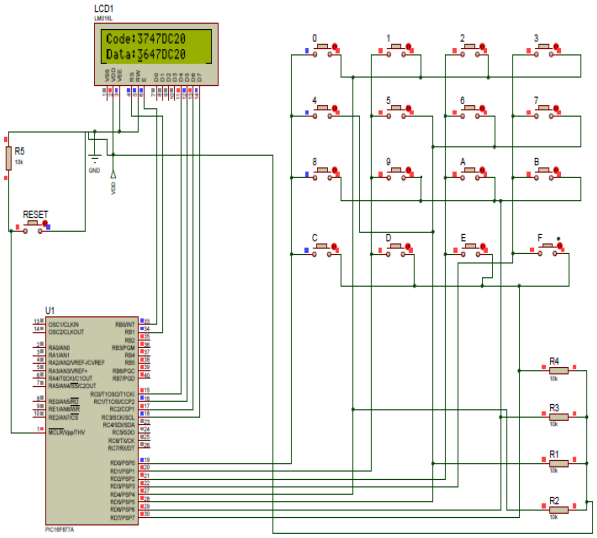

Fig. 7: Reception system of coded message.

V. CONCLUSION AND FUTURE WORK

The protection of digital data transmitted through a baseband channel is of great importance. In fact, we use a small and perfect sequence of generator polynomial. The use of a long sequence as turbo codes and concatenated codes decreases the debit [12]-[15]. Following an in-depth examination of coding theory, our study is principally concerned with the mathematical construction of a generating polynomial that generates a cyclic code of good detection and correction capacity and with the investigation of asymptotic limits of these performances. Thus, our objective is oriented towards the implantation of this generating polynomial into a microcontroller. On a related note, the simulation of baseband data transmission of an errored message by our system demonstrates the robustness of our code. Indeed, the error is detected by the decoder is corrected automatically and then displayed on an LCD display.

REFERENCES

[1] F. A. B. Edoukou. "Codes correcteurs d'erreurs définies à partir des variétés algébriques'', PhD Thesis, Université de la Méditerranée, Marseille, France, 2007.
[2] A. Spataru, "Fondements de la théorie de la transmission de l'Information'', Ed. Presses Polytechniques Romandes, 1987.
[3] Shu Lin, Daniel J. Castello, Jr. "Error control coding: Fundamentals and Applications'', Prentice-Hall Serie in Computer Applications in Electrical Engineering, 1983.
[4] F. Montero, A. Dandache, A. M'Sir and B. Leply, "A fast CRC implementation on FPGA using piplined architecture for the polynomial division" 8th ICECS, St Julian, Malta, 2001.
[5] Pierre Ccillag, "Introduction aux codes correcteurs'', Edition Marketing, 1990.
[6] V. Capellini, "Data compression and Error control Techniques with Applications'', Edition Academic press, Ed.Academic Press, 1985.
[7] A. J. Viterbi "Error bounds for convolutional codes and asymptotically optimum decoding algorithm", IEEE Trans. On Inf. Theory, IT-13, 260-269, April 1967.
[8] E. R. Berlkamp, R. E. Peile and S. P. Pope, "The Application of Error Control to Communication", IEEE commun. Mag., vol. 25, pp. 44-57, 1987.
[9] M. K. Simon and J. G. Smith, " Alternate Symbol inversion for improved symbol synchronization in convolutionally coded system", IEEE Trans. Commun., COM-28, 1980.
[10] J. G. WADE, "Codage et Traitement du Signal, L'exemple des systèmes Vidéo Numériques'', Ed. Masson, 1991.
[11] G. Ungerboeck, and I. Csajka, " On improving data link performance by increasing the channel alphabet and introducing sequence coding", IEEE Int. Symp. On Inf. Theory, Ronneby, Sweeden, 1976.
[12] D. Divsalar and F. Pollara, "On the design of Turbo codes", JPL TDA Progress Report 42-123, Pasadena, California, pp. 99-121, 1995.
[13] G. D. Forney, "Concatenated Codes", MA: MIT Press, Cambridge, 1966.
[14] C. Berrou, A. Glavieux, R. Pyndiah, "Turbo-codes : Principes et Applications", GRETSI'95, Juan-les-pins, France, 1995.
[15] S. A. Barbulescu, R. Chang and S. Yaghmour, "Turbo codec-QPSK modem for INTELSAT digital Services ", The 2nd Int. Symp. On Turbo Codes, Brest, France, pp. 487-490, 2000.

A. El Abbassi received the B.S. degree in applied sciences from College of Ibn Khaldoun -El jadida, Morocco in 1988, the M.S. degree in high frequency and telecommunications from Faculty of Sciences of El Jadida, in 1997, and the Ph.D Transistors MOS: Modeling and characterization from Faculty of Sciences of El Jadida, in 2002. His research interests are the microelectronics and transmission systems.

A. El Amrani received the B.S. degree in applied sciences from College of El Mansour Dahbi, Morocco in 1997, the M.S. degree in Circuit, systems, micro and nano technologies for high frequency communications and optics from Faculty of Sciences and Technology of Limoges, France, in 2005, and the Ph.D. in high frequency electronics and optoelectronics from XLIM Research institute of Physics, MINACOM Department, Limoges, France in 2008. His research interests are the photoelectronic devices and systems.

Published By:
Blue Eyes Intelligence Engineering
and Sciences Publication (BEIESP)