International Journal of Engineering and Advanced Technology (IJEAT)
ISSN: 2249-8958 (Online), Volume-3 Issue-3, February 2014

Review on Combine Effect of Exhaust Gas Recirculation (EGR) and Inlet Air Pressure on Performance and Emission of Diesel Engine

Patel Vibha, Hardik B.Ramani

Abstract— ***Concern of environmental pollution and energy crisis all over the world have caused the research attention on reduction of diesel engine exhaust emissions and saving of energy simultaneously. Better fuel economy and higher power with lower maintenance cost has increased the popularity of diesel engine vehicles. Diesel engines are used for bulk movement of goods, powering stationary/mobile equipment, and to generate electricity more economically than any other device in this size range. As we know that the diesel engine are known for their high NOx formation and Exhaust Gas Recirculation (EGR) is being used widely to reduce and control the oxides of nitrogen (NOx) emission from diesel engines. EGR controls the NOx because it lowers oxygen concentration and flame temperature of the working fluid in the combustion chamber.However, the use of EGR leads to a trade-off in terms of soot emissions moreover it exhausted more unburned hydrocarbons (20–30%) compared to conventional engines and it also affect the volumetric efficiency and BSFC of engine performance. The increased in inlet air pressure results in better scavenging and reduced exhaust temperature in the engine, better mechanical efficiency and improved volumetric efficiency. Therefore, by using EGR with pressurized inlet air have different effect on both engine emission such as CO, UHC and NOx and on the engine performance such as BSFC, torque, thermal and volumetric efficiency.***

Keywords: Exhaust gas recirculation, Diesel engine, Inlet air pressure, Emission.

I. INTRODUCTION

Diesel engines are among the most effective engines in the world. Known as strong, economical and robust, they are also recognized for their traditional smoke and high level of nitrous oxides, NOx emissions. The diesel cycle was developed by the German engineer, Rudolf Christian Karl Diesel, considered the first engineer who applied the thermodynamic theory to develop combustion engines. Continuous research and development turned the diesel engine highly efficient. Its application includes propulsion units for ships, train and load vehicles such as buses and trucks besides; it is used as power source in auxiliary machinery, such as emergency diesel generators, pumps and compressors. At the same time, a drawback of diesel engines is that they are harmful to human health and the environment due to pollutant emissions. A Comparison between Otto engines, largely applied to passenger cars and diesel engines, in general terms, shows a diesel engine characterized by low specific fuel consumption and low CO and UHCs (unburned hydrocarbons) emissions. On the other hand, NOx emissions are huge in the diesel cycle [3].

Hence, in order to meet the environmental legislations, it is highly desirable to reduce the amount of NOx in the exhaust gas. In most of the global car markets, record diesel car sales have been observed in recent years [1]. The exhorting anticipation of additional improvements in diesel fuel and diesel vehicle sales in future have forced diesel engine manufacturers to upgrade the technology in terms of power, fuel economy and emissions. Diesel emissions are categorized as carcinogenic [2]. Therefore Diesel manufacturers and researchers have been investigating a variety of techniques in the hope of reducing diesel emissions and comply with exhaust emission legislation as far as reasonably practicable. For reducing vehicular emissions, several baseline technologies are being used. These technologies can be classified into two different categories, according to their emission-control techniques. The first prevents emission formation in the engine cylinder through the use of improved combustion technologies, such as high-pressure injection, low compression ratio bowls, and exhaust gas recirculation (EGR). The second uses purifying devices, such as diesel particulate filters (DPFs), selective catalytic reduction (SCR), and lean NOx traps (LNTs).

Instead of using after-treatment systems to comply with exhaust emission legislation, it is also possible to avoid the formation of emissions during the combustion. The raw emissions are reduced and thus no after-treatment is needed. It is common practice nowadays, to use EGR to reduce the formation of NOx emissions.Exhaust Gas Recirculation (EGR) System Exhaust Gas Recirculation (EGR) is an effective pretreatment technique, which is being used widely to reduce and control the oxides of nitrogen (NOx) emission from diesel engines. The exhaust gas mainly consist of carbon dioxide, nitrogen etc. and the mixture has higher specific heat compared to atmospheric air. EGR controls the NOx because it lowers oxygen concentration and flame temperature of the working fluid in the combustion chamber. Re-circulated exhaust gas displaces fresh air entering the combustion chamber with carbon dioxide and water vapor present in engine exhaust. As a consequence of this air displacement, lower amount of oxygen in the intake mixture is available for combustion.

Reduced oxygen available for combustion lowers the effective air–fuel ratio. This effective reduction in air–fuel ratio affects exhaust emissions substantially. In addition, mixing of exhaust gases with intake air increases specific heat of intake mixture, which results in the reduction of flame temperature.

Manuscript published on 28 February 2014.
* Correspondence Author (s)
Patel Vibha, M.Tech (Thermal Engineering pursuing), Jodhpur National University/JNU/,Jodhpur, India.
Prof. Hardik. B. Ramani, Mechanical Dept., OM College of Engineering, Junagadh, India.

Thus combination of lower oxygen quantity in the intake air and reduced flame temperature reduces rate of NOx formation reactions [4, 5]. The EGR (%) is defined as the mass percent of the recirculated exhaust (MEGR) in the total intake mixture (Mi).

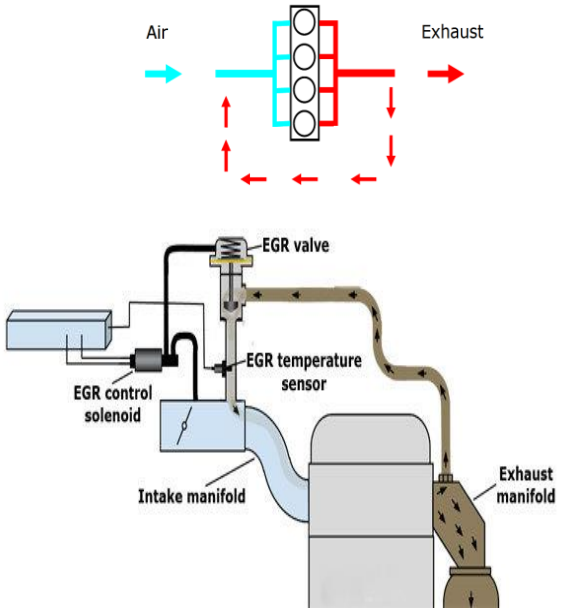

Figure- 3.2: Exhaust Gas Recirculation

A. LITERATURE REVIEW

Jaffar Hussain et al have been carried out an experiment to investigate the effect of EGR on performance and emissions in a three cylinders, air cooled and constant speed direct injection diesel engine. They mainly focus on different EGR rate. They were measured the emission of hydrocarbons (HC), NOx, carbon monoxide (CO), exhaust gas temperature, and smoke opacity and also calculated the performance parameter such as thermal efficiency and brake specific fuel consumption (BSFC). They concluded that thermal efficiency is slightly decreased and BSFC is increased with EGR compared to without EGR. Exhaust gas temperature is decreased with EGR, but NOx emission decreases significantly. They observed that 15% EGR rate is found to be effective to reduce NOx emission substantially without deteriorating engine performance in terms of thermal efficiency, BSFC, and emissions. EGR can be applied to diesel engine without sacrificing its efficiency and fuel economy and NOx reduction can thus be achieved. The increase in CO, HC, and PM emissions can be reduced by using exhaust after-treatment techniques, such as diesel oxidation catalysts (DOCs) and soot traps [18] and its impact on reducing NOx emissions from bio diesel fuel combustion. The application of EGR was found to be an effective method of reducing NOx emissions from biodiesel fuel. An experimental study was conducted by Maiboom et al. (2008) on a 2.0 l HSDI automotive diesel engine under low load and part load conditions in order to distinguish and quantify some effects of EGR on combustion and NOx/PM emissions. At low load conditions, use of high EGR rates at constant boost pressure is a way to drastically reduce NOx and PM emissions but with an increase BSFC and in other emissions (CO and hydrocarbon), whereas EGR at constant air/fuel ratio may drastically reduce NOx emissions without important penalty on BSFC and soot emissions but is limited by the turbo charging system.

Wagner et al. tried to achieve lower emission of NOx and soot using highly diluted intake mixture. At very high EGR rate (around 44%), PM emission decreased sharply with a continuous drop in NOx emission but this high EGR rate significantly affect the fuel economy [12]. Sasaki et al. conducted experiments using EGR on direct injection gasoline engine and reported that an appropriate volume of EGR improves fuel economy and HC emissions. This phenomenon was presumably due to the intake temperature increase by EGR, which improved the flame propagation in the relatively lean region of the air–fuel mixture, which is non-uniformly distributed [5]. Buomsik Shin et al in their experiment, hydrogen were added into the intake manifold of a diesel engine to investigate its effect on NOx emissions and thermal efficiency under low-temperature and heavy-EGR conditions. They obtained Lower NOx emissions by supplying hydrogen at a constant EGR ratio. The percentage NOx reduction due to the hydrogen was greater at higher EGR ratios. At a 31% EGR ratio, the specific NOx was lowered by 25% when the hydrogen equivalent to 10% of the total fuel's lower heating value was supplied, compared with pure diesel combustion. They also observed the brake thermal efficiency, calculated from the torque and fuel flow rate measurements, improved slightly due to the hydrogen supply, even at low intake gas temperatures and heavy-EGR conditions [9].

Nidal H. Abu-Hamdeh in his experiment were designed spiral fin exhaust pipes to study the effect of cooling the recirculated exhaust gases (EGR) of Diesel engines on the chemical composition of the exhaust gases and the reduction in the percentages of pollutant emissions. He found that O2 and CO2 concentration in exhaust gases decreased but CO percentage in the exhaust gases increased because of using the heat exchanger pipes. The exhaust NOx was decreased and particulate matter concentrations were increased as a result of increasing the cooled EGR ratios [10].

Rizalman Mamat et al conducted an experiment on Ultra Low Sulphur Diesel (ULSD) and finds effect ofAir Inlet Pressure drop on Performance and emission. They concluded that increase of pressure drop resulted to increase BSFC and reduce the engine efficiency at low load and part load. The exhaust emission of NOx is increase as pressure drop increase [16]. Mustafa Canakci have been conducted an experiment to study the effects of boost pressure on the performance and exhaust emissions of a DI-HCCI gasoline engine. He finds that Brake Thermal Efficiency increases with increase of Fuel consumption. CO, HC increases with increase of Inlet Pressure while NOx reduces [15].

B. EXPERIMENTAL SETUP

A single-cylinder, 4-stroke, direct injection water-cooled diesel engine of 5 hp rated power is considered to study the combine effect of EGR and varying inlet air pressure on the performance and emissions of engine. The engine is coupled with a rope brake dynamometer through a load cell. It is integrated with a data acquisition system to store the data for the offline analysis. A pipe arrangement was established for recirculation of exhaust gas from engine. Two manually operated valves are provided in the exhaust gas circuit to get the desired mass flow rate of exhaust gas.

Published By:
Blue Eyes Intelligence Engineering
and Sciences Publication (BEIESP)

Asbestos insulation was provided on the exhaust pipe line therefore not allowing the recirculated exhaust gases to cool down. The schematic diagram and experimental set up of diesel engine is shown in Figure 1.

The specifications of stationary 5 hp direct injection diesel engine used to conduct experiments are given in Table 4.1. In this experimental work, a two stage reciprocating air compressor was used to pressurize the inlet air. An air tank connected with pressure gauge was provided in suction pipe to dampen the fluctuations of the pulsating inlet air. Air at the inlet was monitor using compressor, air tank, pressure gauge and valve arrangement. An orifice plate connected with U-tube manometer was installed in the suction circuit to measure the flow rate of inlet air. Temperature sensor was used to measure the exhaust gas temperature. Concentration of NOx, CO, CO2 and HC measurement were done by using gas analyzer.

C. *Figures*

1. Two stage reciprocating air compressor, 2. Compressor motor, 3. Pressure gauge, 4. Compressor discharge valve, 5. Orifice plate connected with U-tube manometer, 6. Surge tank, 7. U-tube manometer, 8. Diesel engine, 9. Rope brake dynamometer, 10. EGR regulating valve, 11. Fuel tank, 12. Burette for the fuel flow measurement.

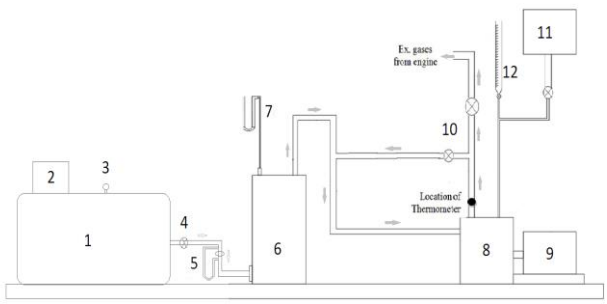

Figure- 1: Schematic line diagram of Engine setup.

II. EQUATIONS FOR CALCULATION

1) **Torque** (T) = W × Re

Where, W = Weight acting on engine in Newton,
= Load (kg) x Gravity (9.81 m/s^2)
Re = Effective radius of drum.
= Radius of drum (m) + Thickness of Belt (m)
= 0.135 + 0.006 = 0.141 m

2) **Brake Power (kW)** $= \dfrac{2\pi NT}{60 \times 1000}$

Where, N = Speed of engine in RPM,
T = Torque in Nm.

3) **Friction Power (kW)** is calculated with the help of William line's method by plotting graph fuel consumption (g/s) vs. brake power (kW).

Indicated power (kW) = Brake power (kW) + Friction power (kW)

4) **Mechanical Efficiency**:

$$\eta m\ (\%) = \frac{\text{Brake Power (kW)}}{\text{Indicated Power (kW)}} \times 100$$

5) **Fuel consumption** (FC):

$$= \frac{10 \times 3600 \times \text{Density of Diesel } (0.8226\ \text{gm/cc})}{tf \times 1000}$$

Where, t_f = time required for 10 cc fuel in second.

6) **Brake Specific Fuel Consumption (BSFC):**

$$= \frac{\text{Fuel Consumption}}{\text{Brake Power}} \text{ kg/kWh}$$

7) **Brake Specific Energy Conservation (BSEC):**

= Brake Specific Fuel Consumption x Calorific Value of Fuel

8) **Brake thermal efficiency** (%):

$$\eta_{bth}\ (\%) = \frac{\text{Brake Power (kW)} \times 3600}{\text{mass of fuel (kg/hr)} \times \text{Calorific Value (kJ/kg)}} \times 100$$

9) **Indicated thermal Efficiency** (%):

$$\eta_{ind}\ (\%) = \frac{\text{Indicated Power (kW)}}{\text{Mass of fuel (kg/hr)} \times \text{Calorific Value (kJ/kg)}} \times 100$$

10) **Air head across orifice** (H):

$$= \frac{hw}{100}\left(\frac{\rho water}{\rho air} - 1\right) \text{meter}$$

Where, hw= head of water in cm,
ρ_{water}= density of water (1000 kg/m^3),
ρ_{air} = density of air in kg/m^3 ($\rho_{air} = \dfrac{P}{RT}$),

Where, P = Pressure in Pascal,
R = Characteristic gas constant (287 J/kgK),
T = Ambient temperature in K.

11) **Mass of air flow(ma):**

$$= Cd \times \frac{Ao \times Ap}{\sqrt{(Ap2 - Ao2)}} \sqrt{(2 \times g \times H)} \times 3600 \times \rho_{air} \text{ kg/hr}$$

Where, Cd=Coefficient of Discharge of Orifice, (0.62)
Ao= Area of orifice, (0.0002 m^2)
Ap= Area of Pipe, (0.0008 m^2)
g = gravity, 9.81 m/s^2,
H= Head of air in meter.

A. *Advantages of EGR :*

- Reduced NOx.
- Improved engine life through reduced cylindertemperatures (particularly exhaust valve life).

B. *Disadvantages of EGR :*

- Unaffected thermal efficiency higher load [9].
- Reduced volumetric efficiency.

These drawbacks can be reduced by pressurized inlet air. The use of pressurized inlet air may have different effect on thermal efficiency, exhaust emission, brake power, in-cylinder release rate and fuel consumption. The increased in inlet air pressure results in better scav reduced exhaust temperature in the engine, better mechanical efficiency and improved volumetric efficiency. The pressurized air increases the power output of the engine. It does not increase the fuel consumption, per brake kW hour. Therefore byEGR with pressurized inlet air have different effect on both engine emission such as CO, UHC and NOx and on the engine performance such as BSFC, torque, thermal and volumetric efficiency. T find out after the experiment.

III. CONCLUSION

An experimental setup was developed to measure the combine effect of increasing inlet air pressure and EGR system on engine performance and emission like brake thermal efficiency, brake specific fuel consumption, NOx, CO, CO2 and HC. From the result following conclusion has been derived.

Published By:
Blue Eyes Intelligence Engineering
and Sciences Publication (BEIESP)

It was found from the experiment that combined effect of increasing inlet air pressure attachment and EGR system provided better result on engine performance. BSFC decreases and brake thermal efficiency increases by increasing inlet air pressure with EGR system than individual EGR system.

Combined effect of increasing inlet air pressure attachment and EGR system is also more beneficial way to reduce significantly NOx emission than individual EGR system because NOx is reduced as the combustion temperature decreases.

The increase in CO, HC, and CO2 emissions can be reduced by using exhaust after-treatment techniques, such as diesel oxidation catalysts (DOCs) and soot traps.

ACKNOWLEDGMENT

It is indeed a pleasure for me to express my sincere gratitude to those who have always helped me for this paper. First I thanks to almighty god who gave strength, courage and sense to complete this paper. I am humbly expressing thanks to my respected guide Prof. Hardik B.Ramani for his valuable time and constant help given to me. He provided me this opportunity to work in this inspiring project. With his enthusiasm, inspiration, and great efforts to explain things clearly and simply, he helped to make this work fun. Throughout he provided encouragement, sound advice, good teaching, good company, and lots of good ideas. I have learned many things from him such as the way of thinking and the way of conducting speech. Finally, I am thankful to allthefacultymembersofMechanical EngineeringDepartment (JNU) and my parents, all my friends who have directly or indirectly helped me during this work.

REFERENCES

1) AnnualDieselReport <http://www.ricardo.com/pages/dieselreport.asp>.
2) K.M. Stewart, Health effects of diesel exhaust. Report from American Lung Association of Pennsylvania, 2001.
3) Y.A. Levendis, I. Pavlatos, R. Abrams, Control of diesel soot, hydrocarbon and NOx emissions with a particulate trap and EGR.
4) N. Ladommatos, R. Balian, R. Horrocks, L. Cooper, The effect of exhaust gas recirculation on combustion and NOx emissions in a high-speed direct injection diesel engine.
5) S. Sasaki, D. Sawada, T. Ueda, H. Sami, Effect of EGR on direct injection gasoline engine. Abu-Hamdeh, Effect of cooling the recirculated exhaust gases on diesel engine emissions.
6) Zelenka P, Aufinger H, Reczek W, Catellieri W. Cooled EGR—a key technology for future efficient HD Diesels. Desantes JM, Galindo J, Guardiola C, Dolz V. Air mass flow estimation in turbo charged diesel engine from in cylinder pressure measurement.
7) Kreso AM, Johnson JH, Gratz LD, Bagley ST, Leddy DG. A study of the effects of exhaust gas recirculation on heavy-duty Diesel engine emissions.
8) J. Kusaka, T. Okamoto, Y. Daisho, R. Kihara, T. Saito, Combustion and exhaust gas emission characteristics of a diesel engine dual-fueled with natural gas.
9) G.H. Abd-Alla, Using exhaust gas recirculation in internal combustion engines.
10) Nidal H. Abu-Hamdeh, Effect of cooling the recirculated exhaust gases on diesel engine emissions.
11) Ming Zheng, Graham T. Reader, J. Gary Hawley, Diesel engine exhaust gas recirculation.
12) Avinash Kumar Agrawal, Shrawan Kumar Singh2, Shailendra Sinha And Mritunjay Kumar Shukla, Effect of EGR on the exhaust gas temperature and exhaust opacity in compression ignition engines.
13) Colban, W.F., P.C. Miles, and S. Oh, Effect of Intake Pressure on Performance and Emissions in an Automotive Diesel Engine .Operating in Low Temperature Combustion Regimes.
14) M.M.Z. Shahadat, M.N. Nabi, M.S. Akhter, M.S.H.K. Tushar, Combined Effect of EGR and Inlet Air Preheating on EnginePerformance in Diesel Engine.
15) Mustafa Canakci, An experimental study for the effects of boost pressure on the performance and exhaust emissions of a DIHCCI gasoline engine.
16) Rizalman Mamat, Nik Rosli Abdullah, Hongming Xu, Miroslaw L. Wyszynski, Athanasios Tsolakis, Effect of Air Intake Pressure Drop on Performance and Emissions of a Diesel Engine Operating with Biodiesel and Ultra Low Sulphur Diesel (ULSD).
17) Simon Reifarth, EGR-Systems for Diesel Engines.
18) Jaffar Hussain , K. Palaniradja, N. Alagumurthi, R. Manimaran, Effect of Exhaust Gas Recirculation (EGR) on Performance and Emission characteristics of a Three Cylinder Direct Injection Compression Ignition Engine

Published By:
Blue Eyes Intelligence Engineering and Sciences Publication (BEIESP)