International Journal of Engineering and Advanced Technology (IJEAT)
ISSN: 2249-8958 (Online), Volume-3 Issue-3, February 2014

Stability Analysis and Limit Cycle Behavior in DC-DC Boost Converter

Athira P Ashok, Bincy M Mathew, Jiku Thomas

***Abstract*— This paper deals with stability analysis and limit cycle behaviors in DC–DC boost converters with a proportional integral (PI) voltage compensator, which is a popular design solution for increasing output voltage in power electronics. The circuit principle is explained with the help of state space averaging. The transfer function of the system is found by the small signal ac modeling of boost converter. The stability of the converter is found by Routh Stability Criterion. The limit cycle behavior is given by the stability analysis.**

***Index Terms*— Stability, Limit cycle behavior, Boost converter.**

I. INTRODUCTION

The elementary DC–DC converters are extensively used in power supplies for electronic circuits and in the control of the flow of energy between DC and DC systems, and in any industrial application where there is a need of stabilizing the output voltage to a desired value. Due to the existence of the switch nonlinearity, these converters can exhibit a great variety of complex behaviors both on the fast time-scale and on the slow one. In practice, as one type of slow-scale dynamical behaviors, limit cycle behavior always occurs in the form of the sub-harmonics oscillation, whose frequency is much lower than switching one. Apparently, if happens, this behavior will drastically degrade the performance of the circuit systems such as transfer efficiency, device stress and EMI so that it is always desirable to avoid its occurrence in actual engineering applications. Thus, investigation of limit cycle behavior in switching converters has become a subject of much on-going research[1].

In this paper, a simple averaged model is used to study the DC–DC boost converters with proportional-integral (PI) compensator. Based on the averaged model, two types of limit cycle behaviors are identified with the help of Routh stability criterion, and accordingly their inherent mechanisms are exposed completely.

II. SYSTEM DESCRIPTION AND MODELING

A. Circuit Principle

A typical boost DC–DC converter with PI voltage compensator is shown in Fig. 1. According to the states of the switches, the system can be considered as a variable structure that toggles its topology.

That is, the diode D and the controlled switch S are turned on and off in a complementary fashion, i.e., one is on while other is off, and vice versa. Hence, only three switch states are possible during a switching cycle.

Assuming that the components in the circuit are ideal and no parasitic effects are considered, the dynamics of each configuration is governed by

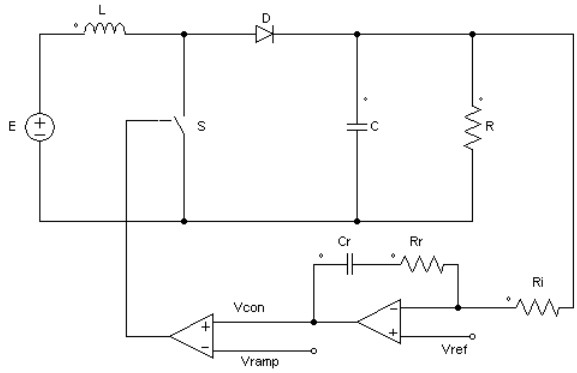

Fig. 1. Boost DC-DC Converter with PI Voltage Compensator.

Configuration 1: S on and D off

$$X(t)=\begin{bmatrix} v(t) \\ i(t) \end{bmatrix}, \quad u(t)=[E]$$

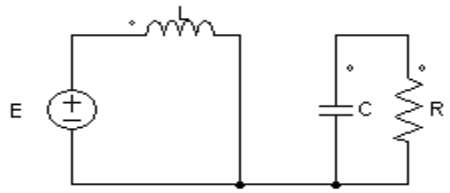

$$E - L\frac{di(t)}{dt} = 0 \Rightarrow E = L\frac{di(t)}{dt}$$

$$C\frac{dv(t)}{dt} = \frac{-v(t)}{R}$$

$$\frac{di(t)}{dt} = \frac{E}{L} \tag{1}$$

$$\frac{dv(t)}{dt} = \frac{-v(t)}{RC} \tag{2}$$

$$\dot{X}(t) = AX(t) + Bu(t) \tag{3}$$

Manuscript published on 28 February 2014.
***** Correspondence Author (s)
Athira P Ashok*, Department of Electrical and Electronics, Karunya University, Coimbatore, India.
Bincy M Mathew, Department of Electrical and Electronics, Karunya University, Coimbatore, India.
Jiku Thomas, Department of Electrical and Electronics, Karunya University, Coimbatore, India.

Published By:
Blue Eyes Intelligence Engineering and Sciences Publication (BEIESP)

$$\begin{pmatrix} \frac{dv(t)}{dt} \\ \frac{di(t)}{dt} \end{pmatrix} = \begin{pmatrix} \frac{-1}{RC} & 0 \\ 0 & 0 \end{pmatrix} \begin{pmatrix} v(t) \\ i(t) \end{pmatrix} + \begin{pmatrix} 0 \\ \frac{1}{L} \end{pmatrix} (E)$$

(4)

Configuration 2: S off and D on

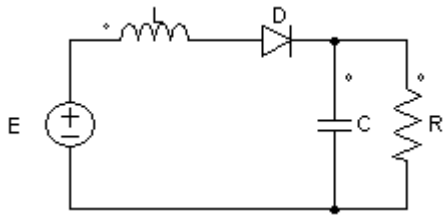

$$E - L\frac{di(t)}{dt} = v(t) \Rightarrow L\frac{di(t)}{dt} = E - v(t)$$

$$\frac{di(t)}{dt} = \frac{E}{L} - \frac{v(t)}{L} \qquad (5)$$

$$i(t) = C\frac{dv(t)}{dt} + \frac{v(t)}{R} \Rightarrow C\frac{dv(t)}{dt} = i(t) - \frac{v(t)}{R}$$

$$\frac{dv(t)}{dt} = \frac{1}{C}i(t) - \frac{1}{RC}v(t) \qquad (6)$$

$$\begin{pmatrix} \frac{dv(t)}{dt} \\ \frac{di(t)}{dt} \end{pmatrix} = \begin{pmatrix} \frac{-1}{RC} & \frac{1}{C} \\ \frac{-1}{L} & 0 \end{pmatrix} \begin{pmatrix} v(t) \\ i(t) \end{pmatrix} + \begin{pmatrix} 0 \\ \frac{1}{L} \end{pmatrix} (E) \qquad (7)$$

Configuration 3: S off and D off

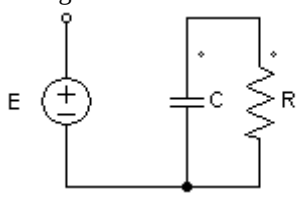

$$C\frac{dv(t)}{dt} = -\frac{v(t)}{R} \Rightarrow \frac{dv(t)}{dt} = -\frac{v(t)}{RC}$$

$$\begin{pmatrix} \frac{dv(t)}{dt} \\ \frac{di(t)}{dt} \end{pmatrix} = \begin{pmatrix} \frac{-1}{RC} & 0 \\ 0 & 0 \end{pmatrix} \begin{pmatrix} v(t) \\ i(t) \end{pmatrix} + \begin{pmatrix} 0 \\ 0 \end{pmatrix} (E)$$

(8)

where x(t) is the state vector $[v(t)\ i(t)]^T$, and E is the input voltage.

The state of controlled switch S is determined by comparing, at each instant, a control voltage $v_{con}(t)$ and a T –period ramp voltage $v_{ramp}(t)$. The expression for $v_{con}(t)$ is

$$v_{con}(t) = k_p(V_{ref} - v(t)) + k_I \int_0^t (V_{ref} - v(\tau)d\tau \qquad (9)$$

Where V_{ref} is the reference voltage, $k_P = R_f / R_i$ is the proportional coefficient, and $k_I = 1/(R_iC_f)$ is the integral coefficient.

The saw-tooth ramp $v_{ramp}(t)$ is

$$v_{ramp}(t) = V_L + (V_U - V_L)\frac{t \bmod T_S}{T_S} \qquad (10)$$

where V_U and V_L are the upper and lower voltage limits of the ramp $v_{ramp}(t)$, and T_s is the switching period.

When $v_{con}(t) > v_{ramp}(t)$, the controlled switch S is closed and the converter operates under configuration 1. When $v_{con}(t) < v_{ramp}(t)$, S is open and the converter operates under configuration 2. If the S is open within a certain cycle, then the current through the inductor drops to zero before S changes its state, i.e., the converter operates under configuration 3.

B. Small Signal ac Modelling

The small signal ac modelling equations is used to find the transfer function of the converter. In what follows, we will derive an small signal ac modelling equations.

Configuration 1: S on and D off

$$E - L\frac{di(t)}{dt} \Rightarrow E = L\frac{di(t)}{dt}$$

$$C\frac{dv(t)}{dt} = \frac{-v(t)}{R}, \quad i_g(t) = i(t)$$

Configuration 2: S off and D on

$$E - L\frac{di(t)}{dt} = v(t) \Rightarrow L\frac{di(t)}{dt} = E - v(t)$$

$$i(t) = C\frac{dv(t)}{dt} + \frac{v(t)}{R} \Rightarrow C\frac{dv(t)}{dt} = i(t) - \frac{v(t)}{R}$$

$$i_g(t) = i(t)$$

Averaging the inductor waveform,

$$L\frac{d \prec i(t) \succ}{dt} = d(t) \prec E \succ_{T_S} + d'(t)\left[\prec E \succ_{T_S} - \prec v(t) \succ_{T_S}\right]$$

$$= \prec E(t) \succ_{T_S} - d'(t) \prec v(t) \succ_{T_S} \qquad (11)$$

Averaging the capacitor waveform,

$$C\frac{d \prec v(t) \succ}{dt} = d(t) \prec -\frac{v(t)}{R} \succ_{T_S} + d'(t)\left[\prec i(t) \succ_{T_S} - \prec \frac{v(t)}{R} \succ_{T_S}\right]$$

$$= -\prec \frac{v(t)}{R} \succ_{T_S} + d'(t) \prec i(t) \succ_{T_S} \qquad (12)$$

Linearization and Perturbation:

$$\prec i(t) \succ_{T_S} = I + \hat{i}(t), \quad \prec v(t) \succ_{T_S} = V + \hat{v}(t)$$

$$\prec E(t) \succ_{T_S} = E + \hat{E}(t), \quad \prec i_g(t) \succ_{T_S} = I_g + \hat{i}(t)$$

$$d(t) = D + \hat{d}(t), \quad d'(t) = D' - \hat{d}(t)$$

From eqn (11), we get,

$$L\frac{d\left[I + \hat{i}(t)\right]}{dt} = E + \hat{E}(t) - \left[D' - \hat{d}(t)\right]\left[V + \hat{v}(t)\right]$$

$$L\frac{d\hat{i}(t)}{dt} = \hat{E}(t) - D'\hat{v}(t) + \hat{d}(t)V \qquad (13)$$

From eqn (12), we get,

$$C\frac{d\left[V + \hat{v}(t)\right]}{dt} = -\frac{\left[V + \hat{v}(t)\right]}{R} + \left[D' - \hat{d}(t)\right]\left[I + \hat{i}(t)\right]$$

$$C\frac{d\hat{v}(t)}{dt} = -\frac{\hat{v}(t)}{R} + D'\hat{i}(t) - \hat{d}(t)I \qquad (14)$$

Published By:
Blue Eyes Intelligence Engineering
and Sciences Publication (BEIESP)

C. Transfer Function

The small signal ac model equations of the boost converter is:

$$L\frac{d\hat{i}(t)}{dt} = \hat{E}(t) - D'\hat{v}(t) + \hat{d}(t)V$$

$$C\frac{d\hat{v}(t)}{dt} = -\frac{\hat{v}(t)}{R} + D'\hat{i}(t) - \hat{d}(t)I$$

Taking Laplace Transform on both sides.

$$LS\hat{i}(S) = \hat{E}(S) - D'\hat{v}(S) + \hat{d}(S)V \quad (15)$$

$$CS\hat{v}(S) = -\frac{\hat{v}(S)}{R} + D'\hat{i}(S) - \hat{d}(S)I \quad (16)$$

From eqn(15),

$$\hat{i}(S) = \frac{1}{LS}\left[\hat{E}(S) - D'\hat{v}(S) + \hat{d}(S)V\right] \quad (17)$$

Sub. Eqn(17) in eqn(16)

$$CS\hat{v}(S) = D'\frac{1}{LS}\left[\hat{E}(S) - D'\hat{v}(S) + \hat{d}(S)V\right] - \hat{d}(S)I - \frac{\hat{v}(S)}{R}$$

$$\left[CS + \frac{D'^2}{LS} + \frac{1}{R}\right]\hat{v}(S) = \frac{D'}{LS}\hat{E}(S) + \frac{D'}{LS}\hat{d}(S)V - \hat{d}(S)I$$

$$\left[\frac{S^2LC + D'^2 + \frac{LS}{R}}{LS}\right]\hat{v}(S) = \frac{D'}{LS}\hat{E}(S) + \left[\frac{D'V}{LS} - I\right]\hat{d}(S)$$

$$= \frac{D'}{LS}\hat{E}(S) + \frac{D'V}{LS}\left[1 - \frac{ILS}{D'V}\right]\hat{d}(S)$$

$$\hat{v}(S)\left[S^2LC + D'^2 + \frac{LS}{R}\right] = D'\hat{E}(S) + D'V\left[1 - \frac{ILS}{D'V}\right]\hat{d}(S)$$

$$\hat{v}(S) = \frac{D'}{\left[S^2LC + D'^2 + \frac{LS}{R}\right]}\hat{E}(S) + \frac{D'V\left[1 - \frac{ILS}{D'V}\right]\hat{d}(S)}{\left[S^2LC + D'^2 + \frac{LS}{R}\right]}$$

$$= \frac{\frac{D'}{D'^2}\hat{E}(S)}{\left[1 + \frac{S^2LC}{D'^2} + \frac{LS}{RD'^2}\right]} + \frac{\frac{D'}{D'^2}V\left[1 - \frac{ILS}{D'V}\right]\hat{d}(S)}{\left[1 + \frac{S^2LC}{D'^2} + \frac{LS}{RD'^2}\right]}$$

$$\hat{v}(S) = \frac{\frac{1}{D'}\hat{E}(S)}{\left[1 + \frac{S^2LC}{D'^2} + \frac{LS}{RD'^2}\right]} + \frac{\frac{V}{D'^2}\left[1 - \frac{ILS}{D'V}\right]\hat{d}(S)}{\left[1 + \frac{S^2LC}{D'^2} + \frac{LS}{RD'^2}\right]} \quad (18)$$

The control-to-output transfer function Gv(s) is

$$G_v(S) = \frac{\hat{v}(S)}{\hat{d}(S)}\Big|\hat{E}(S) = 0$$

For boost converter,

$$V = \frac{E}{D'}$$

$$G_V(S) = \frac{\frac{V}{D'^2}\left[1 - \frac{ILS}{D'V}\right]\hat{d}(S)}{\left[1 + \frac{S^2LC}{D'^2} + \frac{LS}{RD'^2}\right]} \Rightarrow \frac{\frac{E}{D'^2}\left[1 - \frac{ILS}{D'V}\right]}{\left[1 + \frac{S^2LC}{D'^2} + \frac{LS}{RD'^2}\right]}$$

$$G_V(S) = \frac{k_V\left(1 - \frac{S}{Z_V}\right)}{\frac{S^2}{\omega_0^2} + \frac{S}{Q\omega_0} + 1} \quad (19)$$

Where

$$k_v = \frac{E}{D'^2} = \frac{E}{(1-D)^2}$$

$$Z_V = \frac{D'V}{LI} = \frac{D'R}{L} = \frac{(1-D)R}{L}$$

$$\omega_0^2 = \frac{D'^2}{LC} \Rightarrow \omega_0 = \frac{D'}{\sqrt{LC}} = \frac{1-D}{\sqrt{LC}}$$

$$\frac{1}{Q\omega_0} = \frac{L}{RD'^2} \Rightarrow Q = \frac{RD'^2}{LD'}\sqrt{LC} = RD'\sqrt{\frac{C}{L}} \Rightarrow R(1-D)\sqrt{\frac{C}{L}}$$

The transfer function of the pulse-width modulator Gd(s) is

$$G_d(S) = \frac{\hat{d}(S)}{\hat{v}_{con}(S)}$$

$$\hat{d}(S) = \frac{1}{V_M}\hat{v}_{con}$$

$$\therefore G_d(S) = \frac{\hat{d}(S)}{\hat{v}_{con}(S)} = \frac{1}{V_M} \quad (20)$$

where VM = VU − VL.

The transfer function of the PI controller Gc (s) is given by

$$G_c(S) = \frac{\hat{v}_{con}(S)}{\hat{v}_e(S)} = k_p + k_I\frac{1}{S} \quad (21)$$

Using eqns. (19)-(21), the closed-loop transfer function of the controlled system can be written as

$$G(S) = \frac{\hat{v}(s)}{\hat{v}_r(s)} = \frac{G_v(s)G_d(s)G_c(s)}{1 + G_v(s)G_d(s)G_c(s)}$$

$$G(s) = \frac{\left[\frac{k_v}{V_M S}\left(1 - \frac{S}{Z_V}\right)\left(Sk_p + k_I\right)\right]}{\left(\frac{S^2}{\omega_0^2} + \frac{S}{Q\omega_0} + 1\right) + \left(k_v - \frac{Sk_v}{Z_v}\right)\frac{1}{V_M}\left(k_p + \frac{k_I}{S}\right)}$$

$$G(S) = \frac{\frac{k_v}{V_M}\left(1 - \frac{S}{Z_V}\right)\left(Sk_p + k_I\right)}{\frac{S^3}{\omega_0} + S^2\left[\frac{1}{Q\omega_0} - \frac{k_v k_p}{Z_v V_M}\right] + S\left[\frac{k_v}{V_M}\left(k_p - \frac{k_I}{Z_v}\right) + 1\right] + \frac{k_v k_I}{V_M}} \quad (22)$$

III. ANALYSIS OF STABILITY AND LIMIT CYCLE BEHAVIORS

In actual applications, it is generally desirable to avoid the occurrence of the limit cycle behaviors. Thus, how to predict the critical condition of limit cycle is very crucial for the design of the DC–DC converters. From Eq. (22), we have the characteristic equation of the closed-loop transfer function

$$N(S) = a_0 s^3 + a_1 s^2 + a_2 s + a_3$$

Published By:
Blue Eyes Intelligence Engineering
and Sciences Publication (BEIESP)

Where $a_0 = \frac{1}{\omega_0^2}$, $a_1 = \frac{1}{Q\omega_0} - \frac{k_v k_p}{V_M Z_V}$, $a_2 = \frac{k_v}{V_M}\left(k_p - \frac{k_I}{Z_v}\right) + 1$ and $a_3 = \frac{k_v k_I}{Z_V}$.

The Routh array is

$$\begin{array}{lll} s^3 & a_0 & a_2 \\ s^2 & a_1 & a_3 \\ s^1 & a_2 - \frac{a_0 a_3}{a_1} & 0 \\ s^0 & a_3 & \end{array}$$

According to Routh stability criterion, if there is no change of sign in the elements of the first column of the Routh array, then the system is stable. For any values of these parameters, $a_0 > 0$ and $a_3 > 0$ are satisfied forever. Hence, if the following condition is satisfied, limit cycle will occur.

$$\begin{cases} a_1 = 0 \\ a_1 a_2 - a_0 a_3 > 0 \end{cases} \quad \text{or}$$

$$\begin{cases} a_1 = 0 \\ a_1 a_2 - a_0 a_3 = 0 \end{cases} \quad \text{or}$$

$$\begin{cases} a_1 > 0 \\ a_1 a_2 - a_0 a_3 = 0 \end{cases}$$

Since a0 and a3 are always greater than zero, the inequality $a_1 a_2 - a_0 a_3 < 0$ holds as a1 = 0. Consequently, limit cycle will appear if the following expressions are satisfied.

$$\begin{cases} a_1 > 0 \\ a_1 a_2 - a_0 a_3 > 0 \end{cases}$$

IV. CONCLUSION

According to Routh stability criterion, there is no change of sign in the elements of the first column of the Routh array. It shows that the boost converter is stable. Based on the transfer function, the limit cycle behaviors are identified with the aid of the Routh stability criterion. The limit cycle will appear if the following expressions are satisfied.

$$\begin{cases} a_1 > 0 \\ a_1 a_2 - a_0 a_3 > 0 \end{cases}$$

REFERENCES

[1] H. Zhanga, Xiao-Ping Yangb, Xi-Kui Maa, BoHea" Analysis of limit cycle behavior in DC–DC boost converters" - Nonlinear Analysis: Real World Applications 13, 2012, pp. 2049–2062.

[2] T. Kousaka, T. Ueta, Y. Ma, H. Kawakami, "Bifurcation analysis of a piecewise smooth system with non-linear characteristics," International Journal of Circuit Theory and Applications 33, 2005 pp. 263–279.

[3] E. Toribio, A. El Aroudi, G. Olivar, L. Benadero, "Numerical and experimental study of the region of period-one operation of a PWM boost converter," IEEE Transactions on Power Electronics 15 (2000) 1163–1171.

[4] M. Li, D. Dai, X.K. Ma, "Slow-scale and fast-scale instabilities in voltage-mode controlled full-bridge inverter," Circuits Systems and Signal Processing 27, 2008, pp. 811–831.

Ms. Athira P Ashok was born in Kerala. She received the B.Tech Degree in Electrical and Electronics Engineering from MG University in 2012 and now pursuing M.Tech in Power Electronics and Drives at Karunya University.

Ms. Bincy M Mathew was born in Kerala. She received the B.Tech Degree in Electrical and Electronics Engineering from Kerala University in 2012 and now pursuing M.Tech in Power Electronics at Karunya University.

Mr. Jiku Thomas was born in Kolkata. She received the B.Tech Degree in Electrical and Electronics Engineering from Kerala University in 2012 and now pursuing M.Tech in Power Electronics at Karunya University.

Published By:
Blue Eyes Intelligence Engineering and Sciences Publication (BEIESP)