International Journal of Engineering and Advanced Technology (IJEAT)
ISSN: 2249-8958 (Online), Volume-3 Issue-3, February 2014

Mathematical Modelling and Simulation of Zero-Voltage-Switching Synchronous Buck Converter with a Coupled Inductor

Sudhin Govind, Athulya P Prem, Fuhad Ahamed, Prima Vincent

Abstract— ***the paper presents mathematical modelling and simulation of a synchronous buck converter having soft-switching capability. In order to realize soft switching, based on a basic buck converter, the proposed converter added a small inductor, a diode, and an inductor coupled with the main inductor. The requirements for converters that are more compact, lighter, cost minimization and with an improved performance can be achieved by adopting a high-frequency operation. Because of soft switching, the proposed converter can obtain a high efficiency under heavy load conditions. Moreover, a high efficiency is also achieved under light load conditions, which is significantly different from other soft-switching buck converters. The detailed theoretical analyses of steady-state operation modes are presented, and the detailed modelling methods and some simulation results are also given. The switching waveforms are measured to validate the proposed topology.***

Keywords- Synchronous Buck converter, zero-voltage switching (ZVS), small signal modelling and PSIM software.

I. INTRODUCTION

Nowadays, there are a lot of requirements for dc–dc converters. The constant demand for smaller and lighter power DC- DC converters is pushing the switching frequencies well into Mega Hertz range. Such high frequency switching is possible by resonant topologies. In contrast to the sharp-edged switching waveforms of PWM converters, these resonant converter topologies feature smooth wave-forms resulting in reduced switching losses and less interference [1], [2], [3]. Buck converters, as the basic kind of dc–dc converters, have been used in many areas, such as consumer electronics, appliances, general industries, and aerospace. With technological developments, the demand for small size, lightweight, and high reliability for dc–dc converter increases sharply. High switching frequency can be used to reduce sizes and weights of converters. However, if converters work under hard-switching conditions, switching losses will increase as switching frequency increases, and the total efficiencies will drop. Soft- switching technologies are the best methods to reduce switching losses, and improve efficiencies and reliabilities. Thus, the sizes of heat sinks can be reduced. The total sizes and weights of converters will also be reduced [4]. Zero-voltage transition (ZVT) and zero-current transition (ZCT) are two techniques which incorporate a soft-switching function into conventional pulse width modulation (PWM) converters [7]–[12] in order to reduce switching losses.

Manuscript published on 28 February 2014.
***** Correspondence Author (s)
Sudhin Govind, Karunya University, Coimbatore, India.
Athulya P Prem, Karunya University, Coimbatore, India.
Fuhad Ahamed, Karunya University, Coimbatore, India.
Prima Vincent, Karunya University, Coimbatore, India.

In ZVT and ZCT BDCs, to avoid complexity, using the same auxiliary elements which provide soft commutation in both modes of operation of BDC is desirable. There are many methods to realize soft switching, and the most common is using additional quasi-resonant circuits. By adding auxiliary switches, inductors, and capacitors, zero-current-switching (ZCS) conditions or zero-voltage- switching (ZVS) conditions can be easily achieved in quasi- resonant converters. However, high voltage stresses and high current stresses for power switches are also generated [5]. It is not beneficial to select the proper rank of power switches, because there are more conduction losses when using higher voltage power switches. In addition, in some converters, auxiliary switches work under hard-switching conditions, or work two times in a switching cycle. Thus, additional power losses will be generated. Due to auxiliary switches, the control method is more complicated than that of conventional pulse width modulation converters, and additional measuring circuits of voltage and current are needed [6].

Additionally, coupled inductors can also be utilized to achieve ZVS conditions. By adding an auxiliary winding with the main inductor, another power flow channel is supplied to achieve soft-switching conditions. In [13], only a diode and an auxiliary winding are added to achieve ZVS conditions. It can resolve the reverse recovery problem of the body diode of the synchronous MOSFET switch. In [14], an auxiliary winding coupled with the main inductor, a small inductor, and two large capacitors are added to achieve ZVS. Its current ripple can be zero. In another ZVS converter [16], by adding a small inductor, a diode, and an auxiliary winding coupled with the main inductor, the current of the small inductor is bipolar; that is critical for ZVS. Its principle for ZVS is similar to that of interleaved structures [15]. Moreover, both interleaved structures and coupled inductors are also used to yield better results in soft-switching topologies. In order to overcome these problems, a ZVS synchronous buck converter with a coupled inductor is proposed. An auxiliary circuit branch is adopted to achieve ZVS turn-on of two power switches and solve the reverse recovery problem of the body diode of the synchronous switch. Moreover, the continuous current mode is still maintained. The operating principles, small signal modelling of the circuit and simulation results are given.

II. CIRCUIT OPERATION

In the synchronous buck converter topology, a power MOSFET replaces the traditional buck converter output-stage commutating diode. This improvement reduces the typical 0.5-V-to-1-V diode drop to about 0.3 V or less, resulting in typical circuit efficiency improvements of around 5% and higher.

Published By:
Blue Eyes Intelligence Engineering and Sciences Publication (BEIESP)

The basic synchronous buck converter circuit includes a pair of MOSFETs, an output filter, and a controller that provides the synchronous switching function. Figure 1 shows the simplified schematic diagram of a typical synchronous buck converter.

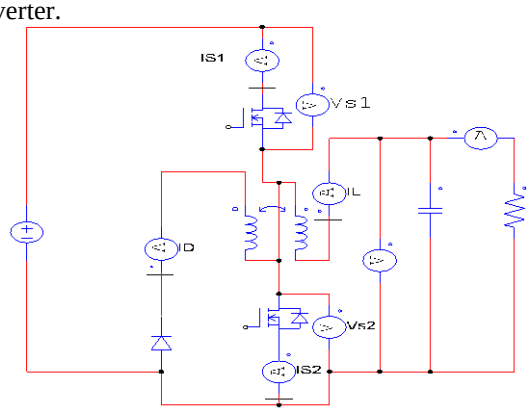

Fig . 1 Typical synchronous buck converter

Mode 1 [t0-t1]: At t0, the upper switch S1 is turned off. Then, the coupled inductor current i_L starts to charge C1 and discharge C2. Therefore, the voltage V_{S1} across S1 increases toward V_{in}, and the voltage V_{S2} across S2 decreases toward zero.

Mode 2 [t1-t3]: At t1, the voltage V_{S2} across the switch S2 is zero, and the body diode D2 starts to conduct. Then, the gate pulse for the switch S2 is applied. Since the current has already flown through D2 before S2 is turned on, the zero-voltage turn- on of S2 is achieved. The voltageV_1 across the magnetizing inductance is -Vo.

Mode 3 [t3-t4]: At t3, the synchronous switch S2 is turned off. Then, the coupled inductor current i_L and the diode current i_{Da} start to charge C2 and discharge C1. Therefore, the voltage V_{S1} across S1 decreases toward zero voltage, and the voltage V_{S2} across S2 increases toward V_{in}.

Mode 4 [t4-t6]: At t4, the voltage V_{S1} is zero, and the body diode D1 starts to conduct. Then, the gate pulse is applied to S1. Since the current has already flown through D1 before S1 is turned on, the zero-voltage turn-on of S1 is achieved. At t5, the switch current i_{S1} changes its direction. Therefore, the gate pulse should be applied to S1 before t5. Since the upper switch S1 is turned on, the voltage V_1 across the magnetizing inductance Lm is V_{in} −Vo

Mode 5 [t6-t7]: At t6, the current i_{Da} is zero. Since V_1 is V_{in} −Vo during the time interval t4 −t7, the current im increases linearly from I_{m2}. At t7, the current im arrives at its maximum value I_{m1}. In this mode, the auxiliary branch current i_{Da} is zero. Then, the inductor current i_L is equal to the magnetizing current i_m.

III. SMALL SIGNAL MODELLING

. In this section, small signal modelling of the proposed circuit is presented. Circuit is divided into subcircuits according to the switching conditions. And current and voltage equations are found using Kirchoff's laws.

Mode 1:

When S1 is ON

$$V_g = L.\frac{di_L}{dt}$$

$$I_g = C.\frac{dV_C}{dt} + \frac{V_t}{R}$$

Mode 2:

When S2 is ON

$$V_t = L.\frac{di_L}{dt}$$

$$I_L = C.\frac{dV_C}{dt} + \frac{V_t}{R}$$

Adding perturbances, we get

$$L.\frac{di_L}{dt} = d(t).[V_t - V_g] + d^{'}(t)[V_t]$$

$$C.\frac{dV_C}{dt} = d(t)[I_g - \frac{V_t}{R}] + d^{'}(t)[I_L - \frac{V_t}{R}]$$

Expanding and taking linear terms we get,

$$L.\frac{d\hat{i}_L(t)}{dt} = D\hat{V}(t) - D\hat{V}_g(t) + \hat{d}(t)V_t - \hat{d}(t)V_g + D^{'}V_t + D^{'}\hat{V}(t) - \hat{d}(t)V_t$$

$$C.\frac{d\hat{V}_C(t)}{dt} = D\hat{I}_g(t) - D\frac{\hat{V}(t)}{R} + \hat{d}(t)I_g - \hat{d}(t)\frac{V_t}{R} + D^{'}\hat{i}_L(t) - D^{'}\frac{\hat{V}(t)}{R} - \hat{d}(t)I_L + \hat{d}(t)\frac{V_t}{R}$$

Simplifying we get the final equations as:

$$L.\frac{d\hat{i}_L(t)}{dt} = \hat{V}(t) - D\hat{V}_g(t) - \hat{d}(t)V_g + D^{'}V_t$$

$$C.\frac{d\hat{V}_C(t)}{dt} = -\frac{\hat{V}(t)}{R} + D\hat{I}_g(t) + \hat{d}(t)[I_g - I_L]$$

seperated circuits:

Input side:

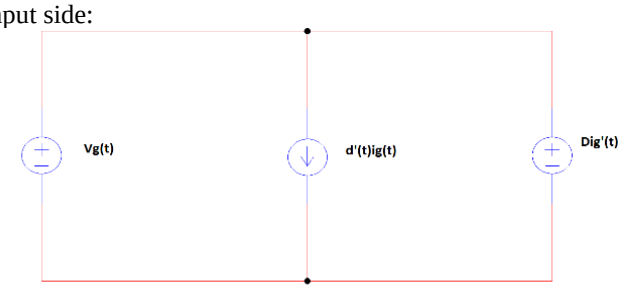

L- side:

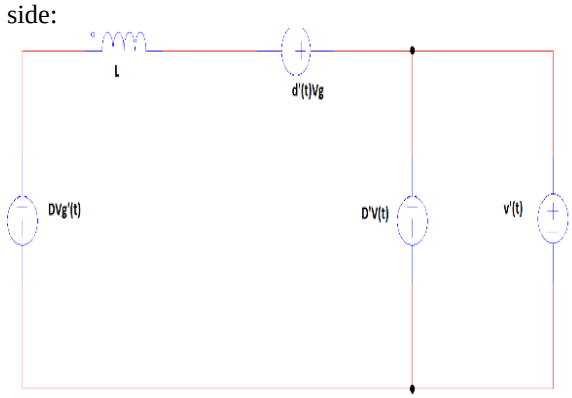

C-side:

Published By:
Blue Eyes Intelligence Engineering and Sciences Publication (BEIESP)

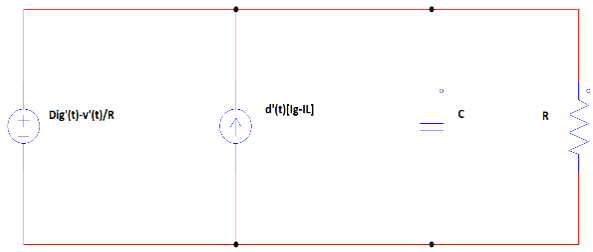

Combing these three, we get

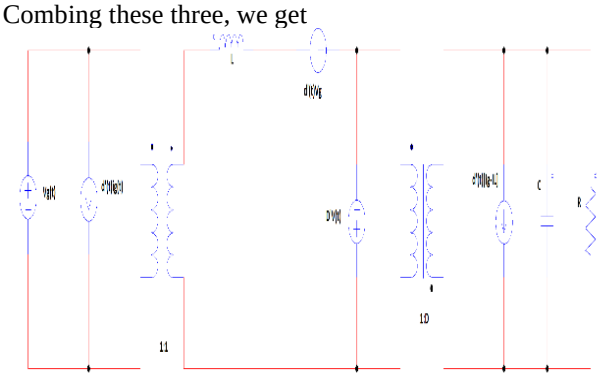

III. SIMULATION RESULTS

The figure below shows the simulation diagram of the proposed converter. The simulation is carried out in PSIM environment.

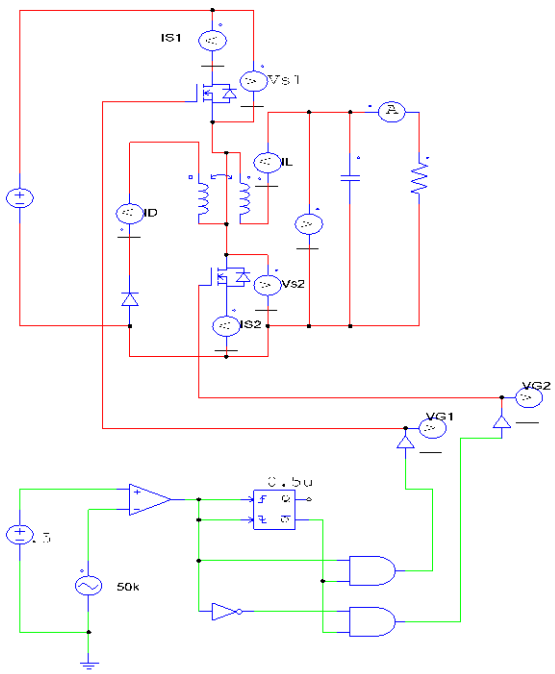

Fig. 2 Simulation diagram of the proposed converter

The parameters of the simulation circuit is given in TAB. 1

TABLE 1 SIMULATION PARAMETERS

Parameter	Specifications
Input voltage	10V
Switches	MOSFET
Snubber capacitance	1u
Load	10ohm

After simulating the converter in PSIM environment the results are obtained as shown below:

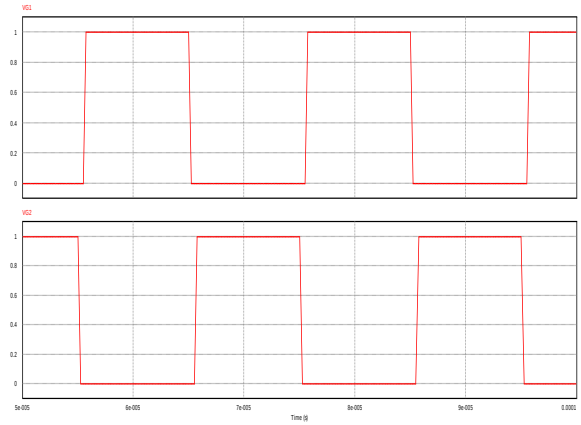

Fig. 3 Gating pulses for the switches S1 and S2

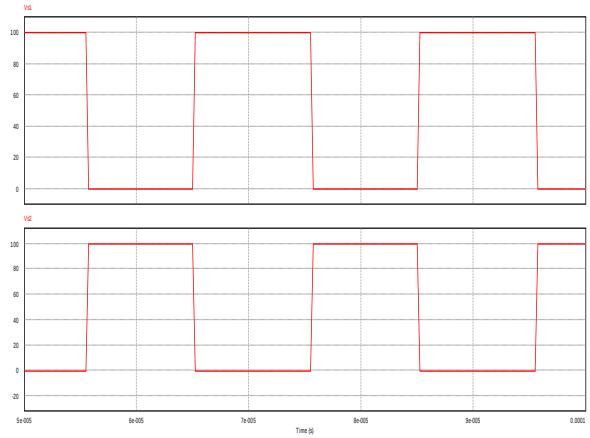

Fig. 4 Voltage waveform across the switches S1 and S2

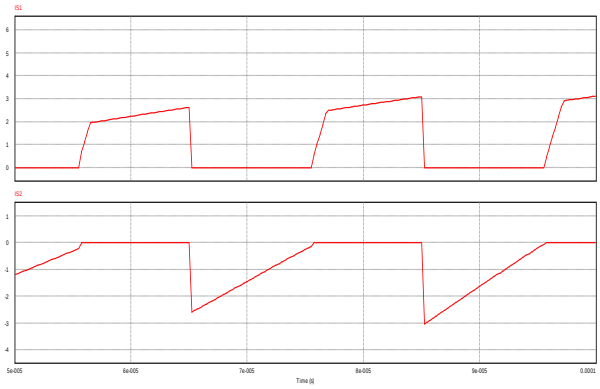

Fig. 5 Current waveform through the switches

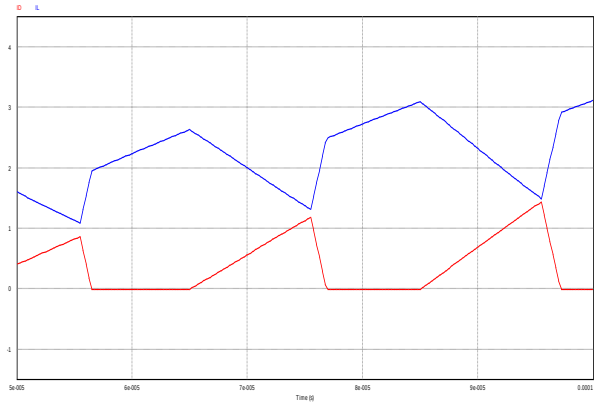

Fig. 6 Diode current and inductor current waveforms

Published By:
Blue Eyes Intelligence Engineering
and Sciences Publication (BEIESP)

IV. CONCLUSION

Small signal modelling and simulation of a ZVS synchronous buck converter with a coupled inductor has been done. The proposed converter can achieve a ZVS turn-on of two power switches while maintaining CCM. Since no additional magnetic or active component is required to obtain the ZVS feature, the proposed converter present a simple structure and lower cost compared to other soft-switching converters. Simulation results verify the theoretical analysis.

REFERENCES

[1] Hyun-Lark Do. "Zero-Voltage-Switching Synchronous Buck Converter with a Coupled Inductor" IEEE Transactions on Industrial Electronics, Vol. 58, No. 8, August 2011

[2] Y.-M. Liu and L.-K. Chang, "Single-stage soft-switching ac–dc converter with input-current shaping for universal line applications," IEEE Trans. Ind. Electron., vol. 56, no. 2, pp. 467–479, Feb. 2009.

[3] Y. Tsuruta, Y. Ito, and A. Kawamura, "Snubber-assisted zero-voltage and zero-current transition bilateral buck and boost chopper for EV drive application and test evaluation at 25 kW," IEEE Trans. Ind. Electron., vol. 56, no. 1, pp. 4–11, Jan. 2009.

[4] Lei Jiang, Chunting Chris Mi, Siqi Li, Chengliang Yin, and Jinchuan Li "An Improved Soft-Switching Buck Converter With Coupled Inductor" IEEE Transactions On Power Electronics, Vol. 28, No. 11, November 2013

[5] H. Bodur and A. F. Bakan, "An improved ZCT-PWM DC–DC converter for high-power and frequency applications," IEEE Trans. Ind. Electron., vol. 51, no. 1, pp. 89–95, Feb. 2004.

[6] M.Jabbariand H.Farzaneh fard,"New resonant step-down/up converters," IEEE Trans. Power Electron., vol. 25, no. 1, pp. 249–256, Jan. 2010.

[7] G. Hua, E. X. Yang, Y. Jiang, and F. C. Lee, "Novel zero-current-transition PWM converters," IEEE Trans. Power Electron., vol. 9, no. 6, pp. 601– 606, Nov. 1994.

[8] G. Hua, C.-S. Leu, Y. Jiang, and F. C. Y. Lee, "Novel zero-voltage-transition PWM converters," IEEE Trans. Power Electron., vol. 9, no. 2, pp. 213–219, Mar. 1994.

[9] Y. Tsuruta, Y. Ito, and A. Kawamura, "Snubber-assisted zero-voltage and zero-current transition bilateral buck and boost chopper for EV drive application and test evaluation at 25 kW," IEEE Trans. Ind. Electron., vol. 56, no. 1, pp. 4–11, Jan. 2009.

[10] M. Mahdavi and H. Farzanehfard, "Zero-current-transition bridgeless PFC without extra voltage and current stress," IEEE Trans. Ind. Electron., vol. 56, no. 7, pp. 2540–2547, Jul. 2009.

[11] E. Adib and H. Farzanehfard, "Family of zero-current transition PWM converters," IEEE Trans. Ind. Electron., vol. 55, no. 8, pp. 3055–3063, Aug. 2008.

[12] E. Adib and H. Farzanehfard, "Zero-voltage-transition PWM converters with synchronous rectifier," IEEE Trans. Power Electron., vol. 25, no. 1, pp. 105–110, Jan. 2010.

[13] H.-L. Do, "Zero-voltage-switching synchronous buck converter with a coupled inductor," IEEE Trans. Ind. Electron., vol. 58, no. 8, pp. 3440– 3447, Aug. 2011.

[14] H.-L.Do, "Non isolated bidirectional zero-voltage-switching DC–DC converter," IEEE Trans. Power Electron., vol. 26, no. 9, pp. 2563–2569, Sep. 2011.

[15] J. Zhang, J.-S. Lai, R.-Y. Kim, and W. Yu, "High-power density design of a soft-switching high-power bidirectional dc–dc converter," IEEE Trans. Power Electron., vol. 22, no. 4, pp. 1145–1153, Jul. 2007.

[16] Y. Zhang and P. C. Sen, "A new soft-switching technique for buck, boost, and buck–boost converters," IEEE Trans. Ind. Appl., vol. 39, no. 6, pp. 1775–1782, Nov./Dec. 2003.

Published By:
Blue Eyes Intelligence Engineering and Sciences Publication (BEIESP)