International Journal of Engineering and Advanced Technology (IJEAT)
ISSN: 2249-8958 (Online), Volume-2 Issue-6, August 2013

# Automatic Wheelchair using Gesture Recognition

**Rakhi A. Kalantri, D.K. Chitre**

***Abstract*— The needs of many individuals with disabilities can be satisfied with traditional manual or powered wheelchairs, a segment of the disabled community finds it difficult or impossible to use wheelchairs. There is extensive research on computer-controlled chairs where sensors and intelligent control algorithms have been used to minimize the level of human intervention. This project describes a wheelchair for physically disabled people. Our goal is to design and develop a system that allows the user to robustly interact with the wheelchair at different levels of the control and sensing. A dependent-user recognition using Head movements and infrared sensor integrated with wheelchair. A wheelchair can be driven using acceleration sensor and Head Movements with the possibility of avoiding obstacles.**

***Our project Automatic wheelchair basically works on the principle of acceleration, one acceleration sensor, provides two axis, acceleration sensors whose output varies according to acceleration applied to it, by applying simple formula we calculate the amount of tilt & output of tilt will decide to move in which direction. Sensor gives x-axis & y-axis o/p independently which is fed to ADC & then µC & depending on the pulse width it decides to move or not. On chair Obstacle sensors will be installed. Total 4 sensors will be installed for detection of wall/obstacle in the forward, backward, left & right direction. We are trying to build a controlled wheelchair; the system will understand and obeys natural language motion commands such as "Take a right." Various technologies are used for developing such a system.***

***Index Terms*—AT89C51 microcontroller MAX232 for protocol conversion, acceleration sensor L293D driver IC, 12v DC power supply, Serial cable, Kiel uv3 for Embedded 'C' programming**

## I. INTRODUCTION

The aim of this project is to use wheelchair automatically for moving forward, backward, Left & Right. The overall framework of this project is to restore autonomy to severely Disabled people by helping them use independently a power wheelchair. A wheelchair is an electric wheelchair fitted with acceleration sensors, obstacle sensor and computer to help less able drivers achieve some independent mobility. By just tilting acceleration sensor wheelchair can be moved in four directions. The obstacle sensor can help the rider control the wheelchair by taking over some of the responsibility for steering and avoiding objects until he or she is able to handle the job. The amount of work that the rider chooses to do and how much control is taken by the chair is decided by the rider and his or her care.

Obstacle in the way can be determined by wheelchair and wheelchair will stop automatically. The wheelchair can also integrate with Head movements and computers; the pilot can use the same controls to drive the wheelchair and operate anothe assistive device, so handicap person who cannot make use of his hands can drive chair by

Head movements. Taking advantage of technological evolution,in order to increase the quality of life for handicap people and facilitate their integration into the working world.In order to guide a wheelchair various situation can be distinguished. If the user is capable of controlling his heads, the ideal solution is the use of a sensor. Our project handicap wheelchair basically works on the principle of acceleration, one acceleration sensor, provides two axes, acceleration sensors whose output is analogs, varies according to acceleration applied to it, by applying simple formula we calculate the amount of tilt & output of tilt will decide to move in which direction.

**Background**

Improving life style of the physically challenged people to a great extent. In recent times there have been a wide range of assistive and guidance systems available in Wheelchair to make their life less complicated. In recent times there have been various control systems developing specialized for people with various disorders and disabilities. The systems that are developed are highly competitive in replacing the old traditional systems. There are many assistive systems using visual aids like Smart Wheelchair systems, Using Joystick and much more. There are even systems based on voice recognition too. The basic assisting using voice control is to detect basic commands using joystick or tactile screen. These applications are quite popular among people with limited upper body motility. There are certain drawbacks in these systems. They cannot be used by people of higher disability because they require fine and accurate control which is most of the time not possible. This paper reports the preliminary work in developing a wheelchair system that involves the movement of Head in directing the wheel chair. The system enables the patient to have command over the Wheelchair its direction of movement and will also sense the user about the obstacles in the path to avoid collision. This wheelchair helps the user to move in environments with ramps and doorways of little space. This work is based on previous research in wheelchairs must be highly interactive to enable the system to work most efficiently.

**Application of Automatic Wheelchair:**

- Hositals
- Health care centers
- Old age home
- Physically handicapped individuals
- In industries as robot to carry goods.
- Automatic gaming toys.
- Communication
- Control of Mechanical systems
- Sports
- Feedback in Computer Based Learning environment

**Manuscript published on 30 August 2013.**
***** Correspondence Author (s)
**Rakhi A. Kalantri***, Lecturer, Department of CSE, Fr.C.R.I.T. Vashi, Mumbai (Maharastra), India
**D.K. Chitre**, Assoc. Professor, Department of CSE, Terna Engineering, Collge, Nerul, Mumbai (Maharastra), India

**Objectives of Automated Wheelchair**

Automated wheelchairs that are equipped with sensors & data processing unit are termed as Smart Wheelchair. Our goal is to design and develop a system that allows the user to robustly interact with the wheelchair at different levels of the control and sensing [6].

## II. ADVANTAGES & DISADVANTAGES

**Advantages:**

Power wheelchairs, also referred to as electric wheelchairs, are a common aid to daily living for people who are disabled or elderly. Power wheelchairs provide many advantages for wheelchair-bound people. Many people who require a wheelchair find a power wheelchair offers more benefits than a bulky manual wheelchair.

1. Increased mobility, For disabled people who cannot use their arms to power a manual wheelchair, or for people who do not have the upper body strength to self-propel a manual wheelchair, power wheelchairs offer the ability to be mobile with the use of a joystick or mouthpiece, such as the sip and puff control described by Wheelchair.ca or a tongue-controlled wheelchair.
2. Increased Maneuverability, Power wheelchairs use casters that swivel a full 180 degrees to provide more maneuverability, especially in small areas, according to the Electric Wheelchairs Center. Maneuverability is one of the key problems associated with wheelchair use. Power wheelchairs allow a disabled individual to get around tight spaces and move through smaller areas, which is especially beneficial at home.
3. Increased Physical Support, A power wheelchair can have the option to allow for more physical support, including adjustable seating such as tilt and recline. Power wheelchair users can also adjust the height of the chair to see their environment more clearly. Some power wheelchairs also have the option of elevation to help a person get to a standing position.
4. Increase disabled people's ability to live independently – to enjoy the same choice, control and freedom as any other citizen –at home, at work, and as members of the community.
5. Enable young disabled children and their families to enjoy 'ordinary' lives, through access to childcare, early education and early family support to enable them to care for their child effectively and remain socially and economically included;
6. Support disabled young people and their families through the transition to adulthood. Transition will be better planned around the needs of the individuals and service delivery will be smooth across the transition; and
7. Increase the number of disabled people in employment while providing support and security for those unable to work.
8. Improving the life chances of disabled people.

**Disadvantages:**

1. The disadvantage faced by disabled people imposes significant economic and social costs.
2. Although power wheelchairs do have some disadvantages, many of them can be turned into advantages with extra money or additional features. Typically a power wheelchair will not fold up or come apart. Most individuals who need to travel may not have a van or larger vehicle to store the power wheelchair; therefore they will have to make other plans. You may have to purchase an additional manual wheelchair for trips. Another option would be to spend more money on a power wheelchair and purchase one that folds ups or will disassemble fairly easily. The fold up power wheelchairs is available in most stores; however, they can cost quite a bit more than traditional power wheelchair.
3. Even since power wheelchairs have increased in popularity, there are still many disabled, injured, or elderly individuals who are unable to purchase a power wheelchair. The number one reason why an individual who would like to purchase a power wheelchair cannot is due to financial reasons. Before purchasing a power wheelchair or completely ruling one out, it is important to speak with insurance or Medicare representatives. Many individuals are not aware of the fact that if a wheelchair is advised by a doctor, it may be fully or partial covered.

## III. EXISTING SYSTEM

Issues with Existing System

1. Existing system is unable to adapt to the external conditions.
2. Accuracy of identification is less.
3. Complex classification techniques employed.
4. Time consuming.
5. Power wheelchairs have increased in popularity, there are still many disabled, injured.
6. Disabled people imposes significant economic and social cost

## IV. PROPOSED SYSTEM

The proposed methodology was trying to develop under the following assumptions:

1. To use wheelchair automatically for moving forward, backward, Left & Right through head movements.
2. Our project Automatic wheelchair basically works on the principle of acceleration, acceleration sensor.
3. When person tilt his head in forward direction above 20degree angle chair will move in forward direction.
4. If person tilt his head in backward direction above 20degree angle chair will move in backward direction.
5. If person tilt his head in left direction above 20degree angle chair will move in left direction.
6. If person tilt his head in right direction above 20degree angle chair will move in right direction.
7. If person tilt his head at 45degree forward priority will be given to forward direction.

## V. IMPLEMENTATION PLATFORM

**5.1 Hardware requirement:**

- AT89C51 microcontroller
- MAX232 for protocol conversion
- acceleration sensor
- L293D driver IC.
- 12v DC power supply.
- Serial cable.


Published By:
Blue Eyes Intelligence Engineering
and Sciences Publication (BEIESP)

### 5.2 Software Requirements:

- Kiel uv3 for Embedded 'C' programming
- Micro flash for chip burning
- Eagle s/w for PCB Design

## VI. ARCHITECTURE OF AUTOMATED WHEELCHAIR

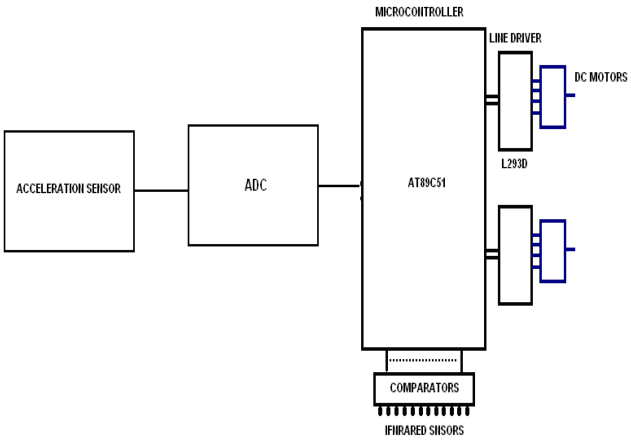


Figure 5: Block diagram automated wheelchair

**Working principle:**

Our project handicap wheelchair basically works on the principle of acceleration, one acceleration sensor, provides two axes, acceleration sensors whose output is analogs, varies according to acceleration applied to it, by applying simple formula we calculate the amount of tilt & output of tilt will decide to move in which direction. Sensor gives x-axis & y-axis o/p independently which is fed to ADC & then µC & depending on the pulse width it decides to move or not. On chair Obstacle sensors will be installed. Total 4 sensors will be installed for detection of wall/obstacle in the forward, backward, left & right direction.

## VII. PCB LAYOUT

Using Eagle software we designed the PCB which is shown in figure 7.1.

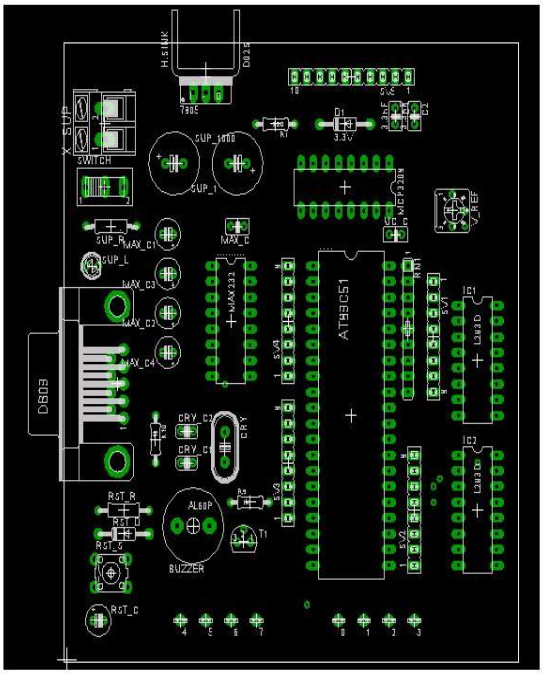

Figure 6 : PCB Design

## VIII. CIRCUIT DIAGRAM

As from the circuit diagram it is clear that we have used microcontroller 89C51.so, the Accelerometer sensor is connected to the port 3 of microcontroller. Depending on the Movement of head, the motor moves in any of the four directions (i.e .forward, backward, left, right). When person tilt his head in forward direction above 20degree angle chair will move in forward direction. If person tilt his head in. Backward direction above 20degree angle chair will move in Backward direction. If person tilt his head in left direction above 20degree angle chair will move in left direction. If person tilt his head in right direction above 20degree angle chair will move in right direction. If person tilt his head at 45degree forward priority will be given to forward direction.

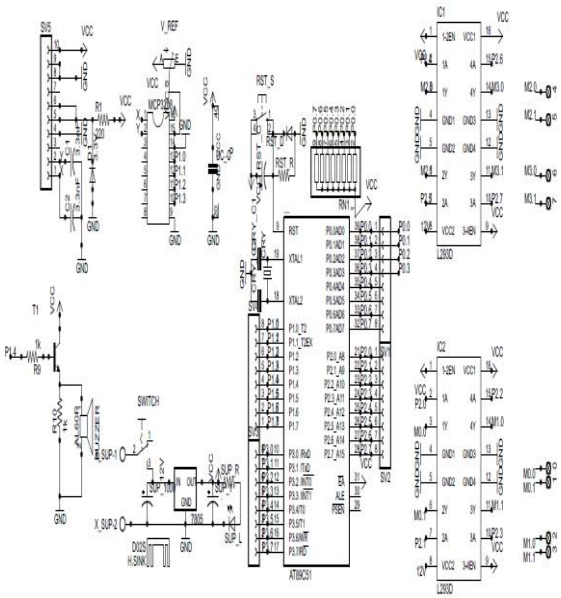

Figure 8: Main Circuit Diagram

Depending on the width of pulse width modulation, microcontroller will generate a count value. So, depending on the value of the count it will give the proper signal to the motor to move in corresponding direction.

## IX. SCREEN SHOTS

1 .Screen shots of Automatic Wheelchair

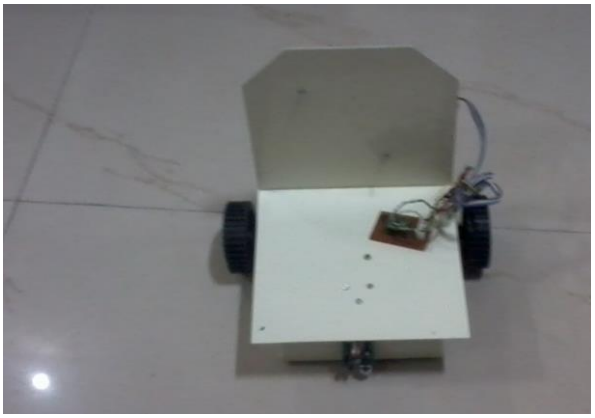

2. Acceleration Sensor:


Published By:
Blue Eyes Intelligence Engineering
and Sciences Publication (BEIESP)

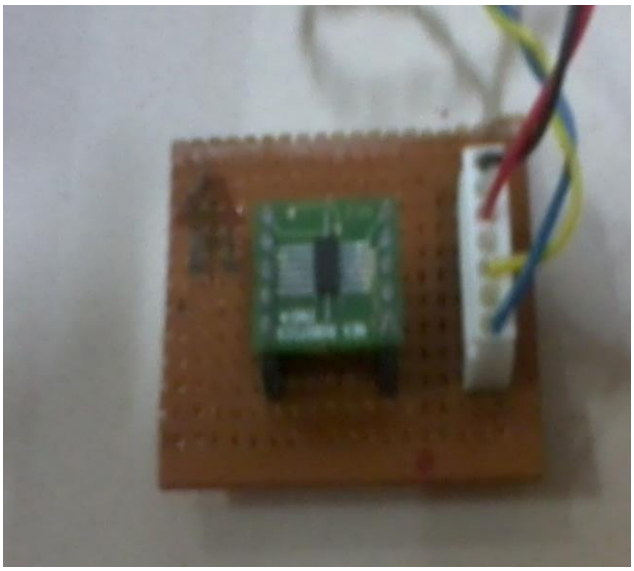

4. Circuit Diagram using PCB

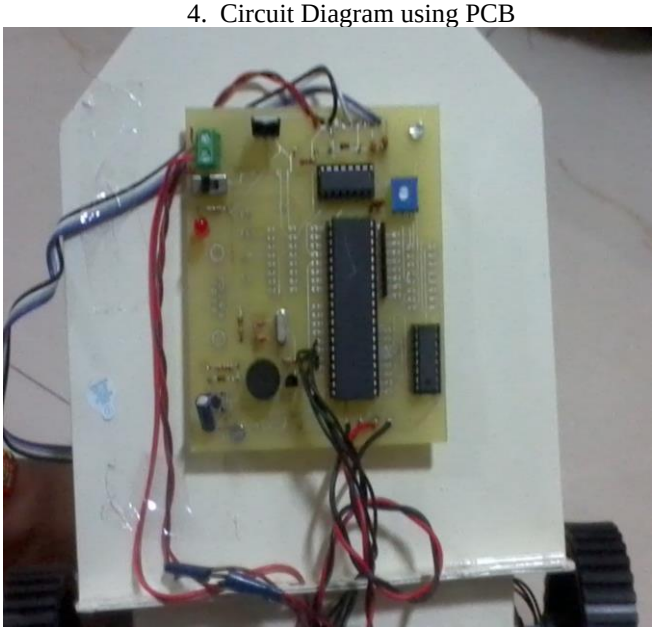

4. Obstacle Sensor

## X. RESULT

1. We obtained four combinations from acceleration sensor which we used to drive a motor in four Directions.

| Direction | Motor 1 | Motor2 |
|---|---|---|
| Forward | Forward | Forward |
| Backward | Backward | Backward |
| Left | Backward | Forward |
| Right | Forward | Backward |

2. From acceleration sensor we found analogue output which got converted into digital at the output of 12 bit ADC which is followed by microcontroller.
3. The program burned into IC is running successfully to accept input from all ports and provide various combinations at output port.

## XI. FUTURE SCOPE

1. We can make a wheelchair which can be operated by a wireless remote. Output of sensor can be applied to wireless transmitter circuit and can received at wheelchair circuit by receiver circuitry. So wireless operation can reduce wiring arrangements.
2. Instead of using acceleration motion (Head Movement) we can use eye retina using optical sensor to move wheelchair in different direction. Using retina movement we would be able to drive a wheelchair.
3. We can use voice command IC to interface our voice signals with microcontroller. So computer interfacing may not be needed. The voice stored in IC could be sufficient to analyze speaker's voice Command.
4. Researchers are going on development of handicap wheelchair using nervous system of human.

## XII. CONCULISON

1. Automated wheelchair can be used to help handicapped people, especially those who are not able to move.
2. Our project was the complete addition of the electronic circuits, the hardware designing & software knowledge.
3. Various related work in the field of Automated Wheelchair.
4. Limitation of Existing System.
5. The system was successfully implemented to move the wheelchair left, Right, Forward, Backward or Stay in same position. .

## REFERENCES


[1] Bourhis G, Moumen K, Pino P, Rohmer S, Pruski A. Assisted navigation for a powered wheelchair. Systems Engineering in the Service of Humans: Proceedings of the IEEE International Conference on Systems, Man and Cybernetics; 1993 Oct 17–20; Le Touquet, France. Piscataway (NJ): IEEE; 1993. p. 553–58.

[2] Boy ES, Teo CL, Burdet E. Collaborative wheelchair assistant. Proceedings of the 2002 IEEE/RSJ International Conference on Intelligent Robots and Systems (IROS); 2002 Sep 30–Oct 5; Lausanne, Switzerland. Piscataway (NJ):IEEE; 2002. p. 1511–16.[3]B. Rebsamen, C. L. Teo, Q.

[3] Zeng, M. H. Ang Jr., E. Burdet, C. Guan, H. Zhang, and C. Laugier. Controlling a wheelchair indoors using thought. IEEE Intelligent Systems, 22(2):18–24, 2007.




Published By:
Blue Eyes Intelligence Engineering
and Sciences Publication (BEIESP)

[4] Keating D, Warwick K. Robotic trainer for powered wheelchair users. Proceedings of the IEEE International Conference on Systems, Man and Cybernetics; 1993 Oct 17–20; Le Touquet, France. Piscataway (NJ): IEEE; 1993. p. 489–93.

[5] Masato Nishimori, Takeshi Saitoh and Ryosuke Konishi, "Voice controlled intelligent wheelchair,"

[6] SICE Annual Conference 2007, International onference on Instrumentation, Control and Information Technology, 2007, pp.336–340.

[7] Moon, M. Lee, J. Chu, and M. Mun, "Wearable EMG-based HCI for Electric-Powered Wheelchair Users with Motor Disabilities," Proc. of the 2005 IEEE Int. Conf. on Robotics and Automation, pp. 2649-2654, 2005.

[8] R. Simpson, D. Poirot, and M. F. Baxter. Evaluation of the Hephaestus smart wheelchair system. In Intemational Conference on Rehabilitation Robotics, 1999.

[9] S.I.Roumeliotis, G.S.Sukhatime, and G.A.Bekey, "Fault Detection and Identification in a Mobile Robot using Multiple-Model Estimation," Proc. of 1998 IEEE Int. Conf. on Robotics and Automation(ICRA), 1998, pp.2223-2228.



Published By:
Blue Eyes Intelligence Engineering
and Sciences Publication (BEIESP)