International Journal of Engineering and Advanced Technology (IJEAT)
ISSN: 2249-8958 (Online), Volume-2 Issue-5, June 2013

Improved Technique for Audio Watermarking Based on Discrete Wavelet Transform

Mangal Patil, J. S. Chitode

***Abstract*—With digital computers, Internet flexibility promotes an efficient distribution of the digital contents. An Approach of digital watermarking has been proved as an effective approach for providing the copyright protection of multimedia data for audio, image & video signals. We propose an effective watermarking algorithm based on Discrete Wavelet Transform for audio. This approach embeds the image watermark data into approximate coefficients of the wavelet transform. Embedded watermark can be faithfully recovered under different attacks such as volume scaling, re-Sampling, low pass filtering & re-quantization, etc. The performance evaluation of proposed algorithm indicates improved signal to Noise ratio & peak signal to noise ratio.**

***Index Terms*—Digital Audio Watermarking, Information Hiding, Copyright Protection, Wavelet Transform, Robustness.**

I. INTRODUCTION

With new advancements in digital computer, digital data can be reproduced, stored and distributed easily across the world. The illegal usage of the quality digital data over the internet has direct effect on the revenue generated by the digital content providers. In recent years, digital Watermarking [1][3] has been proved as an effective approach for providing the copyright protection of multimedia data. Watermarking is achieved by embedding a watermark which can be extracted, when necessary, as a proof of ownership.

Depending upon the multimedia data i.e. image, audio or video, the watermarking technique is classified as image, audio or video. Audio Watermarking technique involves the embedding of secret information (Watermark) into a host (audio) signal. In order to understand the issue of protecting, monitoring & tracking the digital contents, broad understanding of the existing methods is very essential. Several watermarking schemes have been implemented for the protection of intellectual property rights of the digital audio. As Human Auditory System (HAS) is more complex, audio watermarking is more challenging than image & video watermarking. An audio signal requires less number of samples to represent the signal therefore the amount of information that can be embedded in audio signal is very less. In the past few years a large number of algorithms for secure and robust embedding and extraction of watermarks in Audio files have been developed. A broad range of embedding algorithms goes from simple Least Significant Bit (LSB) methods to different Spread Spectrum schemes [4].

Manuscript published on 30 June 2013.
* Correspondence Author (s)
Mrs. Mangal V. Patil, Department of Electronics, Bharati Vidyapeeth University College of Engineering, Dhanakawadi, Pune, Maharashtra, India.
Dr. Janardan S. Chitode, Department of Electronics, Bharati Vidyapeeth University College of Engineering, Dhanakawadi, Pune, Maharashtra, India.

© The Authors. Published by Blue Eyes Intelligence Engineering and Sciences Publication (BEIESP). This is an open access article under the CC-BY-NC-ND license http://creativecommons.org/licenses/by-nc-nd/4.0/

A. Requirements of Watermarking Technique

Main challenge in digital audio watermarking is to achieve the good tradeoff between the robustness and high watermark data rate. The most important requirements are perceptibility, robustness, data rate. According to IFPI (International Federation of the Phonographic Industry) [2][4], audio watermarking technique should meet the following requirements.

i. Robustness:

Robustness is watermark embedded in data has the ability of surviving against various signal processing operations and attacks. The watermark must be robust for general signal processing operations, geometric changes and malicious attack. In copyright protection, watermark does need strong robustness and can resist malicious attacks, while fragile watermarking; annotation watermarking do not need resist malicious attacks.

ii. Perceptual Quality:

The basic requirement of the audio watermarking is that the embedded watermark should not affect the perceptual quality of the original audio signal. The technique should give more than 20 dB signal to noise (SNR) for original audio & watermarked audio.

iii. Capacity:

The algorithm should be able to carry as much information as possible but should not degrade the quality of the audio signal.

iv. Security:

The unauthorized person should not be able to detect & remove the ownership information. Watermark ensures that only authorized users are able to detect or modify the watermark. This paper deals with implementation of efficient watermarking technique for copyright protection of digital audio using Discrete Wavelet Transform. The rest of the paper is organized as follows. Section two gives the introduction to the audio watermarking techniques. A theoretical background on the digital audio watermarking is presented in section III. Discrete wavelet based proposed approach is discussed in section IV. Performance evaluation of the proposed algorithm is depicted in the Section V followed by the conclusion in the last section.

II. TECHNIQUES OF WATERMARKING

Based on their embedding domain, digital watermarking techniques for audio can be classified as Spatial or time Domain and Transform Domain.

A. Time Domain Technique

B. . Transform Domain Technique

Published By:
Blue Eyes Intelligence Engineering and Sciences Publication (BEIESP)
© Copyright: All rights reserved.

A. Time Domain Audio Watermarking: -

In time domain technique, watermark is embedded without any transformation & watermark can be easily destroyed. It is very easy to implement & requires less computation as compared to frequency domain techniques. It is useful in medical applications & ownership protection applications. Various time domain embedding techniques for digital audio signal such as Least Significant Bit (LSB) replacement, Echo hiding, phase coding and Spread Spectrum methods have been proposed. These techniques show poor robustness against common signal processing operations like resampling, Low pass filtering, re-quantization, compression, etc.

B. Transform Domain Audio Watermarking: -

Majority of the signals in practice are represented in time domain. However, the time domain analysis of the signal cannot give complete information of the signal since it cannot provide the different frequencies available in the signal. Watermark is embedded in frequency domain of a signal using Discrete Cosine Transform [8], Discrete Fourier Transform [4] [9][11], and Discrete Wavelet Transform [8][10][12][13][14]. Transforming audio signal from time domain to frequency domain enables watermarking system to embed the watermark into perceptually significant part of a signal `which gives high robustness against general signal processing operations.

Wavelet Transform provides the time-frequency representation of the signal. Discrete Wavelet Transform provides the sufficient information for both analysis and synthesis signal and is easier to implement. The 'wavelet' is an oscillatory vanishing wave with time-limited extends shown in Fig.1. Generally, wavelets are mostly used in signal processing applications. The Analysis of non-stationary signals also can be done with the help of wavelets.

Wavelets can be used to extract information from many kinds of data, including audio signals and images. Mathematically, the wavelet is a function of zero average, having the energy concentrated in time:

$$\int_{-\infty}^{\infty} \varphi(t)dt = 0$$

This proposed work tries to solve the transform based audio watermarking technique based on Discrete Wavelet Transform ((DWT). The operation of 1-level discrete wavelet transform decomposition shown in figure 2 is to separate high pass and low pass components. Thus, process involves passing the time-domain signal x[n] through a high pass filter and down sampling the signal obtained gives detailed coefficients (D). When signal x[n] is passed through low pass filters and down sampling operation gives approximate coefficients (A).

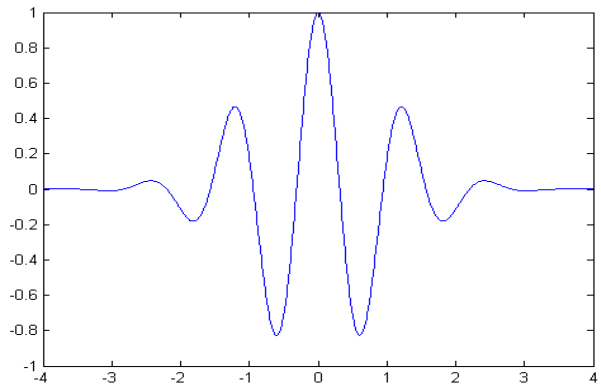

Fig.1: Wavelet

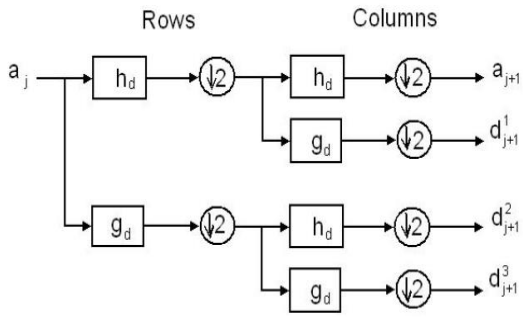

Fig. 2: One level 2D DWT decomposition

The mostly decomposition components selected are low frequency coefficients. The "detail" coefficients are less important for embedding watermarks because they contain less significant components and are thus vulnerable to attacks. Depending upon the type of application and length of the audio signal, the low frequency part might be further decomposed into two parts of high and low frequencies.

The reconstruction process is the inverse of the decomposition process. The approximate coefficients are up-sampled and passed through a low pass filter; similarly, detailed coefficients are up-sampled and passed through high pass filter. The obtained samples from these filters are convoluted to obtain the reconstructed signal of x[n].

There is a trade-off between the capacity and the robustness in determining which level of DWT coefficients should be manipulated. Manipulating a lower level of coefficients gives higher capacity but a lower robustness. Manipulating a higher level of coefficients is conducive to achieving a higher robustness but a lower capacity. In addition, a higher level DWT involves a more computational cost. There are different types of DWT"s available depending on the type of selected basis function. DWT filters are also classified based on the number of vanishing moments. Vanishing moments is defined as the number of zeros at z = -1 in a filter.

The Haar Wavelet Transform is the simplest of all wavelet transform. It is the basic orthogonal wavelet filter. In this the low frequency wavelet coefficient are generated by averaging and high frequency coefficients are generated by taking half of the difference.. The four bands obtained are approximate band (LL), Vertical Band (LH), Horizontal band (HL), and diagonal detail band (HH) shown in Figure 3.

LL (a)	HL (d^2)
LH (d^1)	HH (d^3)

Fig.3: 2D DWT coefficients

The approximation band consists of low frequency wavelet coefficients, which contain significant part. The other bands also called as detail bands consists of high frequency coefficients. The low pass and high pass filters for decomposition and reconstruction are orthogonal given as

Published By:
Blue Eyes Intelligence Engineering
and Sciences Publication (BEIESP)
© Copyright: All rights reserved.

$$\Phi(t) = \begin{cases} 1 & \text{for } 0 \le t \le 1 \\ 0 & \text{otherwise} \end{cases}$$

$$\Psi(t) = \begin{cases} 1 & \text{for } 0 \le t \le 1/2 \\ -1 & \text{for } 1/2 \le t \le 1 \\ 0 & \text{otherwise} \end{cases}$$

The important property of Haar Wavelet is that any real function can be approximated. The filter design includes two components therefore implementation is very easy. The vanishing moments for Haar wavelet is 1 and is the basic wavelet. Haar wavelet is extensively used in compression applications due to its simple wavelet and scaling functions.

III. LITERATURE REVIEW

In recent years, various watermarking techniques have been proposed.. But all these techniques can be used only for specific applications. Most of these techniques take the advantage of perceptual properties of the human auditory system. Few techniques are discussed in the literature.

Xianghong Tang [10] has discussed audio watermarking algorithm based on DWT & complex cestrum transform. This method embeds a binary image watermark into the complex cepstral components of the important coefficients of the audio signal. This method achieves good SNR about 39 dB & resists common signal processing attacks effectively.

Pranab Kumar Dhar [11] proposed a blind digital audio watermarking Technique based on discrete Fourier Transform. In this method, input audio signal is divided into non-overlapping frames. The magnitude and phase spectrum of each frame is calculated using discrete Fourier transform (DFT)., Prominent peak is determined using a peak detection algorithm & watermark is embedded in an audio which ensure that the watermark is located at the most significant perceptual components of the audio.

N. V. Lalitha [12] discussed a new Discrete wavelet transform (DWT) & singular value decomposition based audio watermarking technique. The technique based on DWT –SVD shows good robustness against most of the signal processing opeartions. The proposed approach gives improved PSNR up to 69 dB & Mean opinion score (MOS) value 5 as compared DCT-SVD based technique.

Neha Baranwal & Kamalika Dutta [13] presented a peak detection based spread spectrum audio watermarking using DWT. This technique embeds watermark bits into the highest peak values of the third & fourth level detail coefficients of Audio signal. As compared to the other existing techniques, this method shows high SNR (15dB to 28 dB) & good robustness against signal processing attacks.

Ali Al-Haj & Ahmed Mohammad [14] proposed a robust watermarking approach using DWT & singular value decomposition. Inaudibility & better robustness is achieved by embedding a binary image watermark bits on the elements of singular values of the DWT sub bands of the audio frames. This approach gives the improved SNR ranging from 21 dB to 25 dB as compared to traditional Cox's & Bender's [1] methods.

Although various watermarking algorithms are proposed but these algorithms can be used for specific applications & not for any general application. Strong robustness against attacks with high watermark embedding rate cannot be achieved simultaneously.

IV. PROPOSED WATERMARKING APPROACH:

The watermarking technique is divided into two blocks embedding and extraction. Embedding block is used to add the additional information into the host signal; whereas, extraction block is used to extract the watermark embedded in the audio signal. The watermark embedded is a binary image of dimension 64 × 64.

A. Watermark Embedding procedure:

The embedding process is divided into the individual blocks such as Watermark formation, wavelet decomposition, watermark embedding and reconstruction as shown in Fig. 4.

i) Wavelet decomposition:

Audio signal is decomposed into Haar wavelet filter. Four frequency sub-bands namely approximation, horizontal, vertical & diagonal bands. Low frequency coefficients of the decomposed signal are selected. Low frequency approximate wavelet coefficients are segmented into 2-D matrix blocks Dj, j=1, 2, 3……M × N. Where
M × N is the number of bits in the binary watermark image.

ii) Watermark embedding :

The watermark to be embedded is a binary image B of size M × N. The binary-image watermark is converted into a one dimensional vector. Embed the binary image watermark bits into the DWT transformed audio signal. After the watermark is embedded to the low frequency portion of the input signal, the portion can be recombined with the high pass filtered part to form the watermarked signal by applying inverse DWT operation. The obtained signal is the audio signal with watermark also termed as watermarked signal.

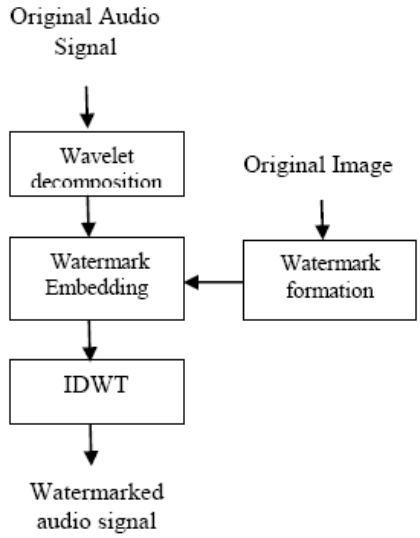

Fig.4: Block Diagram of watermark embedding procedure

B. The watermark extraction process:

The extraction process is illustrated in Fig. 5. The extraction algorithm without using original audio is described as follows;

Published By:
Blue Eyes Intelligence Engineering
and Sciences Publication (BEIESP)
© Copyright: All rights reserved.

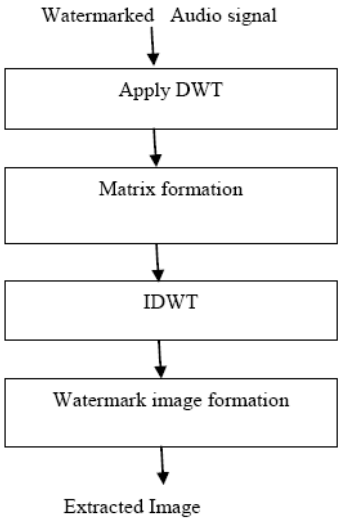

Fig.5 Block diagram of watermark extraction Algorithm

The extraction process is divided into blocks wave decomposition, Matrix formation watermark extraction, Image formation. Watermark can be extracted from a watermarked signal by procedure similar to the embedding process. The watermarked input is first decomposed by discrete wavelet transform using Haar wavelet filter. The low frequency approximate wavelet coefficients into 2-D matrix blocks. The low frequency component of the input is retrieved by applying inverse wavelet transform to get audio signal. one dimensional watermark is transformed into two dimensional watermark image & the watermark image is obtained.

V. EXPERIMENTAL RESULTS

Absolute robustness against all possible attacks may be impossible to achieve. Thus, the practical requirement is that, a successful attack must impair the host data to the point of significantly reducing its commercial value before the watermark is impaired so much that it cannot be recovered. Proposed Watermarking algorithm is evaluated using two measures namely Subjective evaluation test & Objective evaluation test [16].

A. Subjective evaluation test:

Subjective quality evaluation of the watermarking algorithm has been performed by listening test. The opinion of the ten people is considered for the same audio signal.. Mean opinion score (MOS)[17],[18] is considered as subjective evaluation measure shown in Table 1. The procedure of the subjective evaluation is given below

i) The original sample was played to a group of listeners.
ii) The watermarked samples were then played in random order.
iii) Listeners were asked to differentiate between original & watermarked signal after playing original & watermarked signals to each listener.
iv) Listeners were asked to evaluate each sample on a scale of 1 to 5 with five representing the quality of the original sample as shown in Table I. They gave a grade for the played signals. From the given grades average grade for the audio is calculated. Results for MOS between host audio & watermarked audio for the proposed scheme are shown in Table II.

Subjective evaluation can be done using an ABX test. Each test is composed of the original audio file A, the watermarked audio file B and an undefined audio file X which could be either A or B.

Table. I: MOS grading scale

Grade	Description	Quality
5	Imperceptible	Excellent
4	Perceptible	Good
3	Slightly Annoying	Fair
2	Annoying	Poor
1	Very Annoying	Bad

Table II: MOS between host audio & watermarked audio.

Audio Sample	Average MOS
Classical	4.5
Pop	4.6
Music	4.7
Rock	4.8

The listener is asked to identify whether X is A or B. A highly correct identification rate suggests that the watermark is perceptible, while an approximately 50% correct identification rate means that watermark is imperceptible because the identification is similar to a random guessing. However, subjective evaluation based on human listening tests is time consuming and the results can be inconsistent. The reason for this inconsistency is that the hearing ability of different listeners varies depending on their age, exposure to loud noises and even personal interest in music. Therefore, it is sometimes difficult to compare across different subjective evaluation results fairly, and it is desirable to have more objective measures to evaluate the performance of the proposed algorithm.

B. Objective Evaluation test

Other than the subjective evaluation of the extracted watermark, robustness against attacks is measured using Signal to Noise ratio (SNR), Peak signal to noise ratio[18], etc. Watermarked signal may undergo common signal processing attacks such as resampling, re-quantization, low pass filtering, Volume scaling, noise addition, etc. Although these attacks may not affect the perceived quality of the watermarked audio but it may corrupt the watermark image embedded within the host audio.

i) Signal to Noise Ratio (SNR) :

Signal to noise ratio gives the amount by which the signal is corrupted by the noise. It is defined as the ratio of the signal power to the noise power. The SNR is widely utilized as an objective measure of audio quality. It is simple to interpret, easy to apply. According to IFPI, when the SNR is above 20 decibels (dB), audio watermarking should be imperceptible.. SNR can be calculated by equation below.

$$SNR = 10\log_{10}\left(\frac{1}{N}\left(w(i) - w_r(i)\right)\right)dB$$

Where $w(i)$ = Original audio Signal

& $w_r(i)$ = watermarked audio signal

ii) Peal Signal to Noise Ratio (PSNR)

PSNR measures the estimates of the quality of the original & watermarked signal. It is related to mean square error (MSE).It is measured in decibels as

Published By:
Blue Eyes Intelligence Engineering
and Sciences Publication (BEIESP)
© Copyright: All rights reserved.

$$PSNR = 10\log_{10}\frac{255^2}{MSE}$$

Original
Image(Watermark)

MSE is the mean square error and defined as

$$MSE = \frac{\sum_{i=1}^{M}\sum_{J=1}^{N}(I_{ij} - I_{ij}^{*})^2}{MN}$$

Where I_{ij} & I_{ij}^{*} are the original & the watermarked signals respectively with coordinate Position (i, j).

C. *Experimental Results:*

The proposed algorithm is implemented using MATLAB 7.1 for different genres audio signals including Music, classical, pop & Rock signals. Each audio sample is in the WAVE format with 16 bit mono signal sampled at 44100 Hz frequency. The watermark used for experimentation is 64× 64 binary image watermark shown in Figure 6.

According to IFPI (International Federation of Photographic Industry)[2] , the algorithm should offer more than 20dB SNR & it should prevent unauthorized removal unless the quality of the audio becomes very poor. Same attacks are employed on all audio signals. Table III summarize the robustness results of the proposed algorithm obtained against various attack for different audio samples such as Pop, Rock, Classical & Music. It satisfies the required IFPI performance. The watermarks extracted after application of the various attacks on the watermarked pop signal are shown in Table III.

Table III: Extracted watermarks for Pop audio

Attack	Extracted Watermark
Volume Scaling	
Additive Noise	
Low Pass Filtering	
Re-sampling	
Re-quantization	

Fig. 6: Original watermark & Extracted Watermark images without any attack

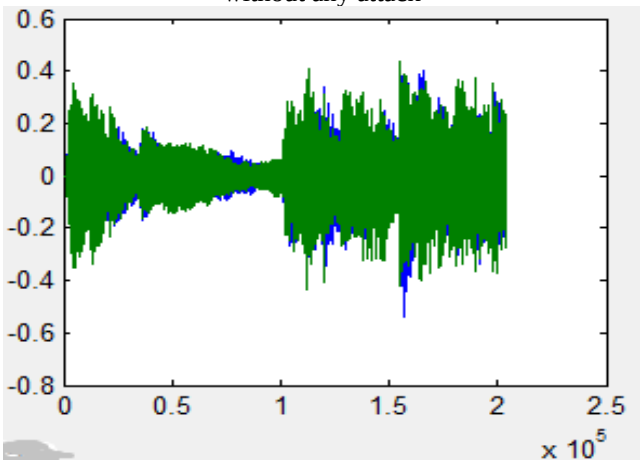

Fig. 7: Response of original audio without any attack for pop signal

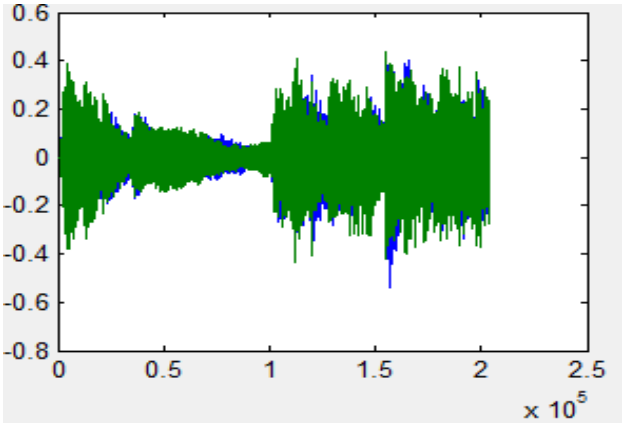

Fig.8: Response of watermarked audio without any attack for pop signal

Original watermark and the extracted watermark without attack for pop signal are shown in Figure 7 & Figure 8 respectively. From the figure it is clear that the watermark embedded and extracted are similar. Figure 7 shows the time domain response of original audio & watermarked audio signals.

Table IV and V gives the performance of proposed scheme against different signal processing operations in terms of signal-to-noise ratio and peak signal-to-noise ratio for different audio signals respectively. It shows improved result as compared to traditional watermarking algorithms.

Various audio watermarking schemes have been proposed which are evaluated in terms of MOS, SNR, BER, etc. Our proposed approach is compared with other audio watermarking techniques as shown in Table VI.

The performance is good as compared to other techniques. The extracted watermark without attack and with attacks for different audio files such as Pop, Rock. Classical & music track is shown in Table III. The results show the improved performance of the proposed approach against common signal processing operations.

Published By:
Blue Eyes Intelligence Engineering
and Sciences Publication (BEIESP)
© Copyright: All rights reserved.

Table IV: SNR Values of the proposed technique against various attacks.

Audio File	without Attack	Volume Scaling	Additive Noise	LPF	Re-sampling	Re-quantization
Pop	32.42	21.44	31.44	32.32	32.98	32.42
Rock	42.55	42.55	40.23	39.02	39.05	42.55
Classical	45.64	53.74	37.10	46.44	46.69	45.64
Music	47.44	37.80	38.96	48.34	48.49	47.44

Table V: Performance evaluation of the embedded watermark with PSNR (dB) for Pop signal

Attack applied	Peak Signal to Noise Ratio (PSNR) dB
No attack	54.88
Addition of noise	54.58
Re-sampling (22.05 kHz)	49.65
Re-sampling (11.025 kHz)	37.02
Re-quantization (8 bit)	50.80
Re-quantization (24 bit)	54.88
LPF (5- order Butterworth, 44.10 kHz)	43.67
Volume Scaling (1.1)	25.45
Volume scaling (0.9)	35.80

Author	Method	Water mark	Robustness against attacks	SNR [d B]
Hooman Nikmehr [8]	DWT & DCT	Binary sequence	Additive noise, Resampling, mp3 compression, low pass filtering, requantization	28.6
Ali Al-Haj [14]	DWT & singular value decomposition	Binary Image	Stir mark attacks, (MP3 compression, Exchange, Invert,addnoise ,Amplify)	25-29
Vivekananda Bhat [19]	Adaptive DWT SVD	Binary watermark	High robustness to MP3 compression	22 - 27
Neha Baranwal [15]	Spread spectrum & DWT	Binary sequence	Requantization,, MP3 compression, Noise addition, resampling	15-29
Proposed approach	DWT	Gray scale Image	Additive noise, Resampling, low pass filtering, Requantization	21-48

VI. CONCLUSION

In this paper, an effective data hiding technique for audio signal is proposed. It is observed that the characteristic of DWT provides good tradeoff between the computational complexity and robustness as compared to time domain technique. Moreover, the proposed method does not require the original audio signal for the detection of watermark. Original audio can be recovered with minimal distortion after extracting the watermark image.. Experimental results show that the embedded watermark is perceptually transparent. The proposed method gives improved Signal to Noise ratio (more than 20 dB) for common attacks which satisfies IFPI requirement. The performance of proposed method is evaluated by the MOS, SNR, and PSNR. This approach is useful in copyright protection applications in which the embedded information is related to the owner of the digital audio . Performance improvement with respect to existing techniques can also be carried out.

Table VI: Comparison of different Techniques

REFERENCES

[1] W. Bender, D.Grul, N.Morimoto, A .Lu, "Techniques for data hiding, IBM System Journal", vol.35, pp.313-336, 1996.

[2] IFPI (International Federation of the Phonographic Industry). (2009). http://www,ifpi.org.

[3] L. Robert. Shanmugapriya, "A study on Digital watermarking Techniques", International journal of Recent trends in Engineering,Vol. No.2,May 2009, pp.223-225.

[4] Cvejic Needljko, "Algorithms for Audio watermarking and Steganography" , Department of Electrical & Information Engineering, Finland, University of Oulu,,2004.

[5] D. Kirovski and H. S. Malvar, Spread-Spectrum Watermarking of Audio Signals, IEEE Transactions on Signal ProcessingVol.3,pp.1345-1348,,2001.

[6] Cox I. J.,Kilian J,. Leighton F. T. ,Shamoon T. , "Secure spread spectrum watermarking for Multimedia", IEEE Transaction on Image Processing,Vol. 6,No.12,pp. 1673-1687, 1997.

[7] Hafiz Malik, Ashfaq Khokhar, Rashid Ansari, "Robust Audio watermarking using spread spectrum theory", ICCAP,pp.385-388,2004.

[8] Hooman Nikmehr,sina Tayfeh Hashemy, "A New Approach to audio Watermarking using discrete Wavelet & Cosine Transforms", International conference on Communication Engineering , 22-24 December 2010,pp.1-10/183.

[9] Senbin Yang,Wei Tan,Yanpu Chen, " Quantization based Digital Audio Watermarking in discrete Fourier transform", Journal of Multimedia,Vol.5,No.2,pp.151-158, 2010

[10] Xianghong Tang ,Yamei Niu,Hemali Yue,Zhong Yin, " A Digital Audio watermark Embedding Algorithm", International Journal Information Technology,Vol. No.11,No.12,pp.24-31, 2005.

[11] Pranab Kumar Dhar,Jong-Myon Kim , "Digital Watermarking scheme based on Fast Fourier Transformation for audio Copyright Protection", International Journal of Security & its Applications ,Vol. 5, No.2,pp.33-48, 2011.

[12] N.V. Lalitha,G.Suresh,Dr.V. Sailaja, " Improved Audio watermarking using DWT-SVD" ,International Journal of Scientific & Engineering Research Volume 2,Issue 6,pp.1-6,2011.

[13] Neha Baranwal ,Kamalika Dutta, "Peak detection based spread spectrum Audio Watermarking using discrete Wavelet Transform", International Journal of Computer Applications,Vol. 24, No. 1,pp.16-20,2011

[14] Ali Al Haj, Ahmed Mohammad, "Digital Audio Watermarking based on the Discrete Wavelets Transform & Singular value decomposition", European Journal of scientific Research Vol.No.39.1, pp.6-21, 2010.

[15] Ming Li,Yun Lei,Jian Liu ,Yonghong Yan, " A Novel Audio Watermarking in wavelet domain", International conference on Intelligent Information Hiding & Multimedia Signal processing,IEEE,2006.

[16] Mamoun Suleiman Al Rababa, Ahmad Khader Haboush,As'ad Mahmoud Al Naser, "Experimental Validation for Hiding data using Audio Watermarking", Australian Journal of Basic & Applied Sciences,Vol.5,No.7,pp.135-145,2011.

[17] Fabien A P Petitcolas, "Watermarking Schemes Evaluation" ,IEEE Signal Processing magazine ,17(5) ,pp. 58-64,2000.

[18] J.D. Gordy, "Performance evaluation of digital watermarking algorithms, "Master's thesis, University of Calgary, April 2000.

[19] Vivekananda Bhat K.,Inndranil Sengupta,Abhijit Das, "An Adaptive audio watermarking based on the singular value decomposition in the Wavelet domain", Digital Signal Processing (Elsevier) ,pp.1547-1558.,2010.

Published By:
Blue Eyes Intelligence Engineering
and Sciences Publication (BEIESP)
© Copyright: All rights reserved.

M. V Patil has obtained the B.E degree in Electronics Engineering from Shivaji University, Kolhapur, India in 1999. She received M.E. degree from the Bharati Vidyapeeth Deemed University College of Engineering at Bharati Vidyapeeth Deemed University, India in 2006. Currently pursuing Ph.D.(Electronics Engineering.) from Bharati Vidyapeeth Deemed University College of Engineering, Pune. She has more than 10 years of teaching experience. She has been serving as a faculty member in the Department of Electronics Engineering at Bharati Vidyapeeth Deemed University College of Engineering, Pune.

Dr. J. S. Chitode is a professor received the B.E. degree in Industrial Electronics Engineering from Bharati Vidyapeeth University, Pune, and Maharashtra in 1991. He received M.E. degree from College of Engineering (COEP), Pune at University of Pune from Maharashtra, India in 1995. He has received Ph.D. degree in Electronics from Bharati Vidyapeeth Deemed University, India in 2009. Currently he is a professor in the Bharati Vidyapeeth Deemed University College of Engineering, Pune (India). His research interest includes Signal processing, Speech Synthesis, Digital Communication, etc. He is actively participating as a member of different professional research societies, like IEEE, ISTE, etc.

Published By:
Blue Eyes Intelligence Engineering and Sciences Publication (BEIESP)
© Copyright: All rights reserved.