International Journal of Engineering and Advanced Technology (IJEAT)
ISSN: 2249-8958 (Online), Volume-2 Issue-5, June 2013

Effect of Impedance Load on the Power Factor of Microcontroller Based Power System

Abhinav Sharma, Saleem Khan, Shavet Sharma, Parveen Lehana

Abstract*— Power system designs require considering various parameters effecting power factor. The research work is carried out to study and analyze the effect of impedance with varying inductance on the power factor of designed system. Eight different values of the inductance are taken from 269.1 mH to 1232.0 mH with capacitance of 50 μF and resistance 124 Ω. From the analysis it is observed that the current through the load is inversely proportional to the values of inductance and similar is the case for power factor. The minimum and maximum values of power factor obtained are 0.358 and 0.987 respectively.

***Index Terms*—Active Power, impedance, power factor.**

I. INTRODUCTION

Most electrical loads do not consume only active power and but also reactive power. The higher the reactive power transported by the distribution network to cover the load requirement, the lower will be the power factor [1-2]. In an electric power system, a load with a low power factor draws more current than a load with a high power factor for the same amount of useful power transferred. The higher currents increase the energy losses in the distribution system, and require larger wires and other equipment. Because of the costs of larger equipment and wasted energy, electrical utilities will usually charge a higher cost to industrial or commercial customers where there is a low power factor [3-6].

Power factor may be defined as the ratio of active power and apparent power .In an AC circuit, there is generally a phase difference ϕ between voltage and current is called the power factor of the ac circuit [7-8]. It is a measure of how the current is being capable to convert into useful work output and a good indicator on the effect of the load current on the efficiency of the supply system [9].Power triangle is shown in Figure 1.

$$\text{Power Factor} = \frac{\text{Active Power (WATTS)}}{\text{Apparent Power (VA)}}$$

Manuscript published on 30 June 2013.
***** Correspondence Author (s)
Abhinav Sharma*, M.tech EEE, Department of Electrical and Electronic Engineering, Arni University, Kathgarh, Himachal Pradesh, India.
Saleem Khan, Dept of Physics & Electronics, University of Jammu,India.
Shavet Sharma, Dept. of Electrical and Electronic Engineering, Arni University, Himachal Pradesh, India.
Dr. Parveen Lehana, Dept of Physics & Electronics, University of Jammu, India.

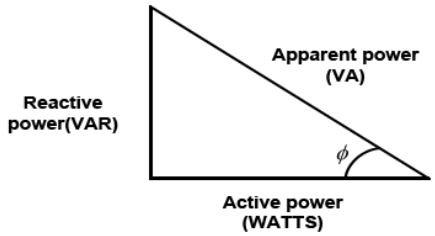

Figure 1: Power Triangle [10].

Power Factor gives a measure of how effective the real power utilization of the system is. It is a measure of distortion of the line voltage and the line current and the phase shift between them [11]. Power factors range from zero (0) to unity (1) with a typical power factor being between 0.8 and also equal to unity. The power factor can also be leading or lagging depending on whether the load is usually capacitive or inductive in nature.

The research work is carried out to investigate the effect of impedance i.e. change in the inductance keeping capacitance and resistance constant on the designed power system. Signal processing technique is used to evaluate the effect of the impedance and calculation of power factor.

II. EFFECT OF ELECTRIC LOADS ON POWER FACTOR

There are three types of electric loads on power factor such as resistive, capacitive, inductive loads. In resistive load the voltage and current peaks coincide with each other and therefore in phase and the power factor is unity. The unit of resistance is referred as ohm (Ω) [12]. Inductive loads require a magnetic field to operate with an inductive load the current waveform is lagging behind the voltage waveform [13-15]. Therefore, the voltage and current peaks are not in phase. The unit of Inductive is called Henrys (H) [12]. The capacitor current leads (instead of lags) the voltage because of the time it takes for the dielectric material to charge up to full voltage from the charging current. Therefore, it is said that the current in a capacitor leads the voltage [3] [16-17]. The units of capacitance are called Farads (F) [18-19].

III. METHODOLOGY

The porposed research work can be expalined in this form of block diagram shown in Figure 2. It comprises of six blocks: voltage and current sensing circuit, power stabilization, variable loads section, load voltage & current measurement, sound card, and signal storage and processing unit.

Published By:
Blue Eyes Intelligence Engineering and Sciences Publication (BEIESP)

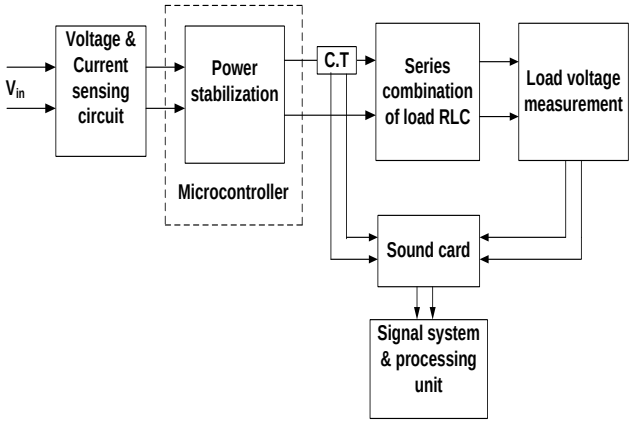

Figure 2: Schematics of the complete block diagram of the system.

Input is applied to the system and its voltage and current are mearsured using the first block. The elevation or drop in the input voltage caused by the fluctions are stablized by the stablization block consists of microntroller and driver circuitry. The controller used in the circuit is PIC16F72 and the volatge stabliztion is done using MOSFET IC P90NF03L with other peripehal devices. The output from the stablization block is applied to the load. Load consists of series combinations of resistor, capacitor and inductor. Different combinations of impedance are taken shown in Table 1.

Table 1: Different combinations of load RLC

S. No.	R (ohm)	L (mH)	C (µF)
1	124	1232.0	50
2	124	1073.0	50
3	124	873.0	50
4	124	729.0	50
5	124	590.6	50
6	124	470.2	50
7	124	363.0	50
8	124	269.1	50

Load current and voltage for different combinations is measured using current transformer (CT) and load voltage measurement block. Further these signals are stored and processed in PC through sound card. Since the value of output load voltage is in tens of Volts, thus cannot be directly applied to the sound card, a circuit is developed to bring down the amplitude of the out voltage from volts to millivolt shown in Figure 3. These signals are recorded in the PC using Gold wave software. The sampling rate and duration of measurement are kept at value of 16000 and 1 sec respectively.

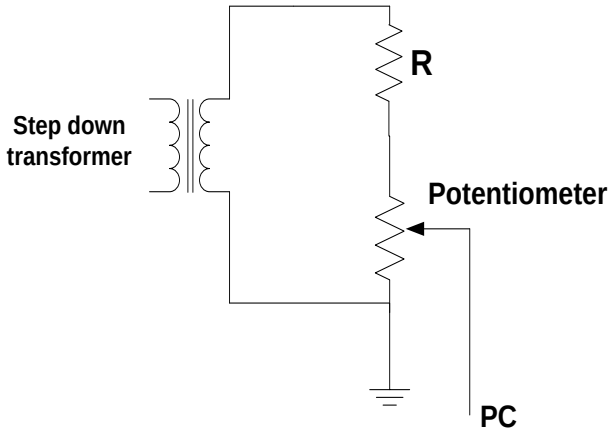

Figure 3: Voltage step-down circuit to input signal to PC.

If the inductor are varying then loads obtained the output pulses of pure sinusoidal sine wave are display in computer through sound card and calculate the load phase angle, ϕ_L between the fundamental components of the load voltage and current (V and I_L respectively.)

IV. RESULT AND DISCUSSION

Investigations of the change in the power factor due to loading effect has been evaluated and analyzed. Calculations of the power factor are carried out using signal system and processing unit. Various combinations of load i.e. capacitive, inductive, and resistive are shown in Table 1 and their total impedance is calculated using following formula: [20-21]

$$Z = \sqrt{R^2 + (X_L - X_C)^2} \quad (1)$$

Where $X_L = 2\pi fL$ and $X_C = \dfrac{1}{2\pi fC}$

Load voltage and current through it are segmented for 0.25 sec for eight combinations of impedance are shown in Figure 4(a) to Figure 4(h).From these plots it can be analyzed that inductance shows a prominent effect on the amplitude of the current but as far as voltage is concerned its amplitude remains constant for all the combinations of the load. Current amplitude is inversely proportional to the magnitude of the inductor.

Theoretical values of the power factor were calculated using following formula given below with all the values of the inductor, capacitor and resistor taken in the experiment: [21]

$$\phi = \tan^{-1}\left(\frac{X_L - X_C}{R}\right) \quad (2)$$

P.F= Cos ϕ

From the output waveforms of current and voltage the practical value of the power factor were obtained. Both theoretical and practical calculated values of power factor are shown in Table 2. Also the error calculated by dividing theoretical and practical calculated values is shown.

Published By:
Blue Eyes Intelligence Engineering
and Sciences Publication (BEIESP)

Table 2: Calculation of power factor

S. No	Impedance Z	P.F. Theoretical	P.F. Practical	Error
1	346.3	0.358	0.358	1.000
2	300.2	0.413	0.422	0.978
3	244.4	0.507	0.515	0.984
4	206.8	0.599	0.587	1.020
5	173.9	0.713	0.707	1.008
6	149.8	0.828	0.819	1.010
7	133.8	0.926	0.891	1.039
8	125.7	0.986	0.987	0.998

The calculated theoretical and practical values are plotted in Figure 5 with different impedance values. As the values of the impedance is decreased i.e. variation in the value of inductance from Henry (H) to mH, the power factor value rises giving minimum and maximum values of 0.358 and 0.987 respectively. There is also some difference in theoretical and practical calculated values are seen in the plot for certain combinations which may arise due to leakage of the inductive or capacitive components.

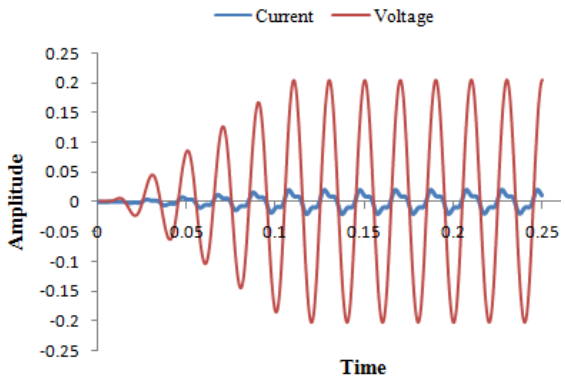

(a): Z = 346.3

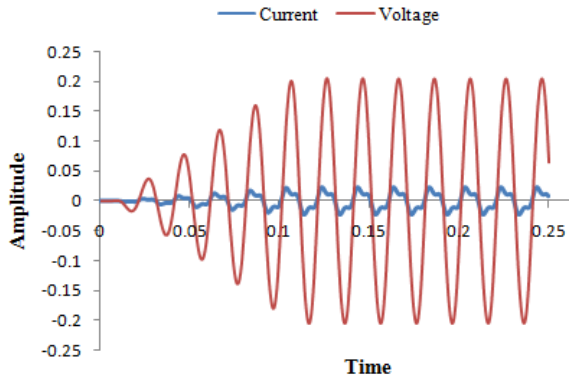

(b): Z= 300.2

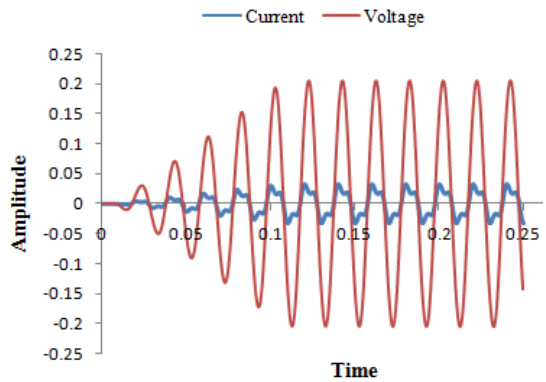

(c): Z= 244.4

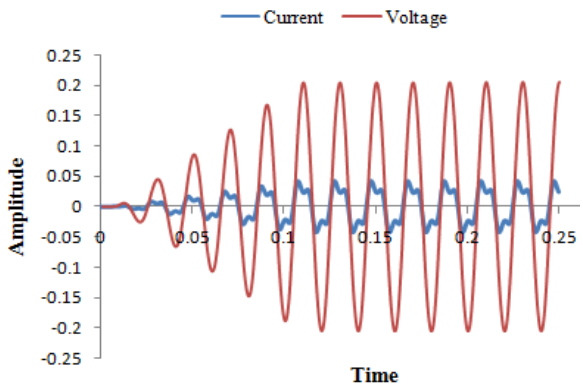

(d): Z=206.8

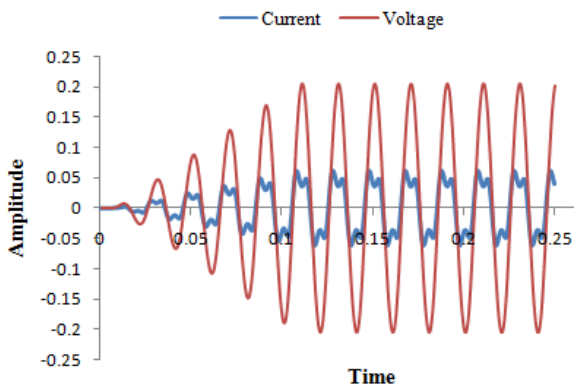

(e): Z= 173.9

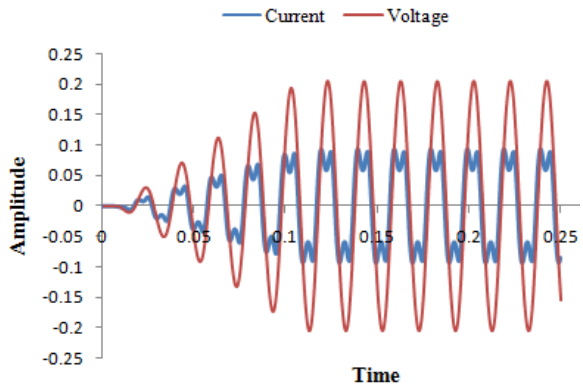

(f): Z=149.8

Published By:
Blue Eyes Intelligence Engineering
and Sciences Publication (BEIESP)

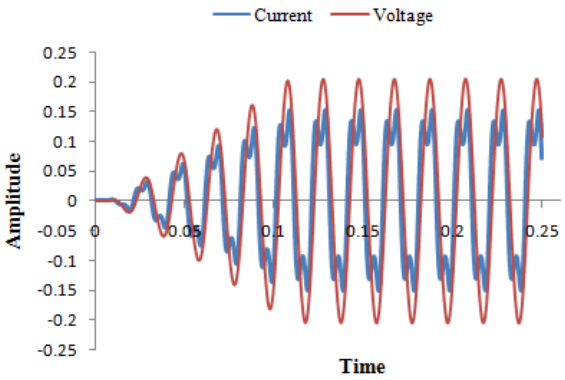

(g): Z= 133.8

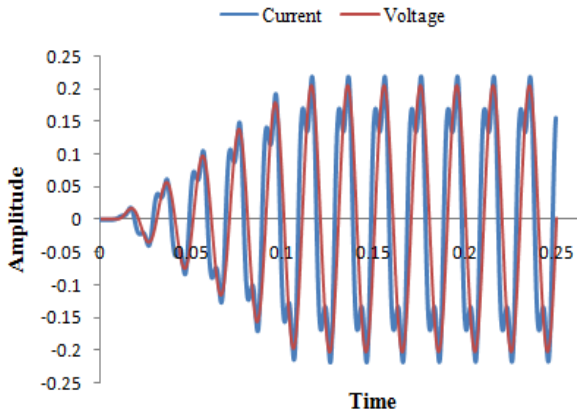

(h): Z=125.7

Figure 4 (a-h): Load current voltage recorded at 16,000 sampling rate for eight different values of inductance.

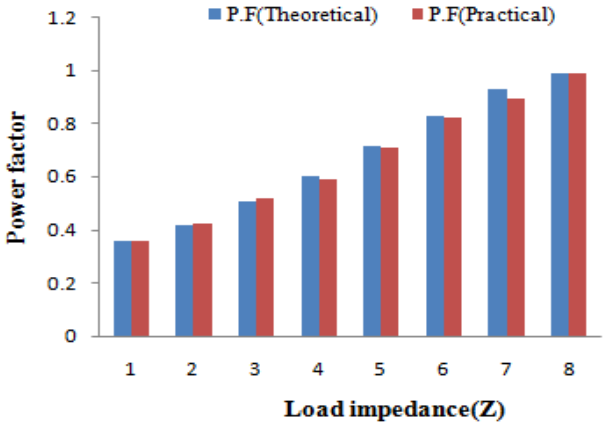

Figure 5: Theoretical and practical calculated value of power factor for different combinations of impedance (Z).

V.CONCLUSION

The research work is carried out to study and analyze the effect of the variation in the load on power factor. Eight different combinations of the load are taken with different values of inductance keeping resistance and capacitance constant. Load current and voltages were recorded from all the combinations. Form the investigations it is observed that the amplitude of the current in the load is inversely proportional to the inductance and also the power factor is inversely proportional to it.

REFERENCES

[1]. J.G. John and J.R. Stevenson, "Power system analysis," McGraw-hill Book Company, New York, 1994.

[2]. S.N. Patel, M.P. Rathod, K.C. Patel, P.H. Panchal and J.N. Prajapati, "Thyristorised Real Time Power Factor Correction," Int. J. of engg. Research & technology (IJERT), Vol. 2, Issue 3, March 2013, pp.1-5.

[3]. P. Trivedi, T. Singh and D.V. Avasthi, ''Development of power factor controller using pic microcontroller," Int. J. of Emerging trends in Eng. and Develop. , Vol.6, Issue 2, September 2012, pp.531-538.

[4]. K.R. Govindan, "Power Factor Improvement," Kavoori Consultants, 2002.

[5]. Mandeep Singh & Jatin Gupta, "Power Factor Improvement in a Textile Plant: An Analysis," Int. J. of Electronics Engineering, Vol.3, No. 2, 2011, pp. 201–202.

[6]. Neena Malhotra and Shivani sehgal, "Power Factor Improvement in a Sugar Mill: An Analysis," Int. J. of Soft Computing and Engineering (IJSCE), Vol.2, Issue 4, September 2012, pp.71-73.

[7]. V.K. Mehta and Rohit Mehta, "principle of electrical machines," S. Chand and company ltd., 2005, pp. 313-377.

[8]. S. Rao, "EHV-AC, HVDC Transmission & Distribution Engineering," Khanna Publishers, 2011, pp. 1157-1205.

[9]. V.k. jain and Amitabh bajaj, "A textbook of design of electrical installations," Laxmi publications ltd., 2004, pp.308-316.

[10]. P.V. Prasuna, J.V.G. Rama Rao and Ch. M. Lakshmi, ''Improvement in power factor & THD using dual boost converter," Int. J. of Eng. Research and Applicat. (IJERA), Vol.2, No.4, July-August 2012, pp.2368-2376.

[11]. Akagi Hirofumi. Active Filters for Power Conditioning. In Timothy L. Skvarenina, "The Power Electronics Handbook: Industrial Electronics Series," United State of America, CRC Press., 2002, Chap. 17, pp.30-63.

[12]. Jianrong Qin and Jiacun Wang, "An online energy evaluation system for manufacturing plants," Int. J. Of Intelligent Control and Systems, Vol. 17, No. 3, September 2012, pp.86-93.

[13]. M. Ravindran and V. Kirubakaran, "Electrical energy conservation in automatic power factor correction by embedded system," Energy and Power, Vol. 2, No. 4, 2012, pp. 51-54, http://journal.sapub.org/ep.

[14]. S. Hasan saeed and D. K. Sharma, "Non-Conventional energy resources," Katson publications, New Delhi, 2006-07.

[15]. Y.Y. Hong, Y.T. Chen and Y.L. Hsu, "Three-phase active power line conditioner planning," IEEE Proc. Generation, Transmission and Distribution , Vol. 145, No. 3, May 1998, pp.281-287.

[16]. A.R. Prasad, P.D. Iogas and S. Manias, "A novel passive wave shaping method for single-phase diode rectifiers," IEEE transactions on industrial electronics, Vol. 37, No. 6, pp. 521-529, 1990.

[17]. Piyush Sharma and Tripti Saha, "Performance analysis of uncontrolled ac/dc converter using different types of passive filter," 2nd Int. Conference on Emerging Trends in Engineering & Technology, College of Engineering, Teerthanker Mahaveer University, April 12, 13, 2013,pp.1-6.

[18]. Steven W. Blume, "Electric Power System Basics," Wiley-Interscience A John Wiley & Sons, Inc., Publication, IEEE Press,2007.

[19]. G.D. Rai, "Non-Conventional energy sources," Kanna publications, New Delhi, 2006.

[20]. Cathleen Shamieh and Gordon McComb, "Electronics for Dummies,"2nd edition, Wiley publishing, Inc., 2009, pp.91-105.

[21]. U.A. Bakshi and A. V. Bakshi, "Electric Circuit Analysis,"1st edition, Technical publications pune,2008,chapter 3, pp.1-74.

Published By:
Blue Eyes Intelligence Engineering
and Sciences Publication (BEIESP)