International Journal of Engineering and Advanced Technology (IJEAT)
ISSN: 2249-8958 (Online), Volume-2 Issue-5, June 2013

Embedded Based Automated Student Attendance Governing System

Sahana S Bhandari

Abstract*—In all aspects of our life, we encounter event recording applications very often. Recording of any entity be it sound, pictures, events etc. is very useful as it enables us to manipulate data to our requirements. One can exploit the full potential of the recorded information for specific user defined purposes. Keeping in mind the significance of event recorders in today's world, we arrived at a common decision of making embedded based instrument. The major problem faced by organizations is time consumption in taking attendance. This project totally eliminates the paper work in maintaining the attendance of each student in schools, colleges or universities. This instrument is easily scalable up to 150 students in 8 different subjects. Our goal is to have electronic files containing details about each student and their attendance status. This paper will try to organize the current attendance record system that will be much quicker and save time of instructors.

Index Terms*— Baud rate, Counters, Integrated Chip, Interrupts, Microcontroller, Quartz crystal.

I. INTRODUCTION

Every organization whether it be an educational institution or business organization, it has to maintain a proper record of attendance of students or employees for effective functioning of organization. Designing a better attendance management system for students so that records are maintained with ease and accuracy was an important key behind motivating this paper. This would improve accuracy of attendance records because it will save valuable time of the students as well as teachers. A proper record of attendance of students should be maintained by the teachers or lecturers in every schools, colleges and universities. Attendance of students in class is important and can be considered as the starting point towards attaining a good education. Recording and monitoring the attendance of students is an area of administration which requires significant amount of time to get necessary data. Up until now, class attendance records have been maintained manually by having students sign next to their names on printed class lists during class. This method is out-dated and time-consuming, and may be improved by applying technology and designing an automated electronic class attendance recording system since time is like money. There is a need to design a system which automatically governs the attendance of each student in a class effectively and efficiently. This system will also help in evaluating attendance eligibility criteria of a student Micro controller and microprocessor are very advanced today in terms of technology.

Manuscript published on 30 June 2013.
***** Correspondence Author (s)
Sahana S Bhandari, Department of Information Science and Engineering Dayananda Sagar College of Engineering Bangalore, India.

The Microcontroller design uses a much more limited set of single and double byte instructions that are used to move code and data from internal memory to the ALU Many instructions are coupled with pins on the IC package; the pins are "programmable" that is, capability of having several different functions dispending on the wishes of the programmer. The Microcontroller is concerned with getting data from and its own pins; the architecture and instruction set are optimized to handle data in bit and byte size.

This paper contains mainly an instrument with hardware component consisting of display unit and serial port for communication purpose, and buttons to mark present or absent, to select subjects, to reset the unit and to send the information to the personal computer (PC). The device which is explained in this technical paper is programmed in such a way that it stores one day's attendance of 5 students in 3 subjects. Further which can be plugged in to PC or laptop and information stored into the device is transferred into the system's memory through serial communication software called 'terminal'. This data can be copied from terminal software to any data manipulation application like M.S Excel, M.S Access.

II. RELATED WORK MANUAL STUDENT ATTENDACE SYSTEM

This is the same old method of taking attendance of students in schools, colleges and universities where the attendance is listed in a sheet or a book called attendance register. Till now, many of the schools and colleges use this method.

The institution creates the list of all students who are there in a particular class. The instructor marks appropriate signs in front of student's name like if a student is present, instructor may put ✓'P' or ' ' and if a student is absent, the instructor may put ✗'A' or ' ' in front of the student's name. At the end of each month every student's attendance status is calculated manually.

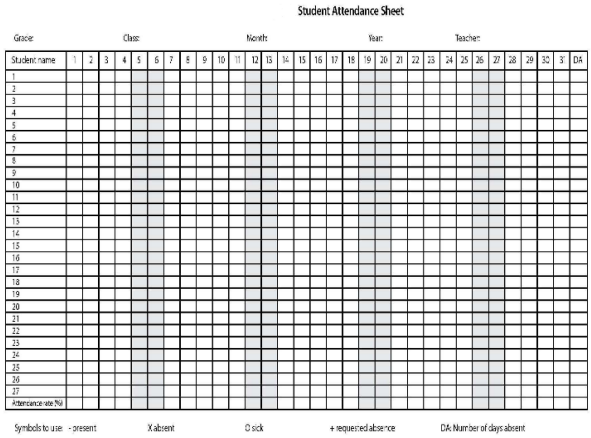

Figure 1: Manual Attendance Sheet

Published By:
Blue Eyes Intelligence Engineering and Sciences Publication (BEIESP)

ADVANTAGES AND DIADVANTAGES ADVANTAGES

- It is helpful in maintaining the information about each and every student's attendance easily.
- No power consumption. Since computer is not involved in it.

DISADVANTAGES

- It consumes a lot of time to take attendance.
- It does not look nice when the lecturer scratches the attendance sheet, if some problem occurs and corrects it.

RFID BASED ATTENDANCE SYSTEM

It is a new technology to govern the student attendance system. RFID means Radio Frequency IDentification.

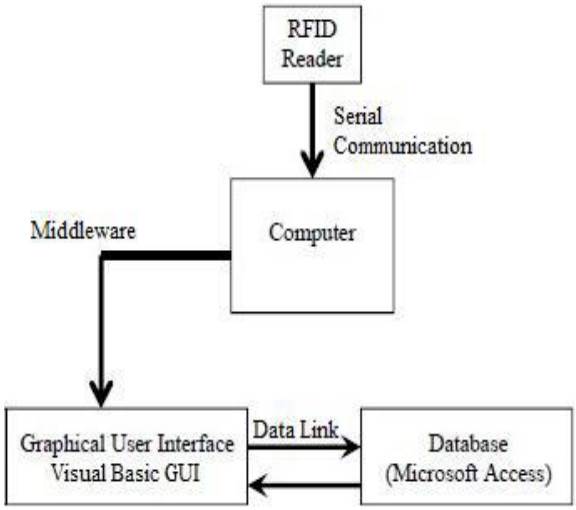

Figure 2: Block representation of RFID system

PROCEDURE

In RFID systems, an item is tagged with a tiny silicon chip plus an antenna collectively called a tag. The tag can be mobile or stationary like student's ID card, and be scanned by stationary or mobile readers respectively, using radio waves. Generally the tag is student's ID card. The tag can be encoded with a unique identifier, allowing tagged items to be individually identified by the reader. In each scanning case, a reader must scan the tag for the data it contains and then send that information to a database, which interprets the data stored on the tag.

Electronic tags can be embedded into student conventional means of identification (student ID card). The electronic tag can be read during motion; no batteries are needed; no line of sight required for wireless communication between the tag and the reader. Tags are almost indestructible, can be read even if covered with dirt or submerged and tags have unalterable permanent serial code that prevents tampering. RFID system serially interfaced to the PC. A single antenna is required for powering and reading the tags. The program was written in Microsoft Visual C# programming language for the front end while the backend was based on Microsoft SQL Server relational database management system (RDBMS).Visual C# enables the rapid application development (RAD) of graphical user interface (GUI) applications, access to databases. There is a RFID middleware which lies in between RFID reader and backend database.

ADVANTAGES AND DISADVANTAGES ADVANTAGES

- It can automatically collect and record all the basic attendance information including name, time of their attendance of both in and out, and ID number, etc.
- This student attendance system could be an access control system.
- This RFID attendance system has the ability for data backup, recovery, and tags replacement.
- Does not consume more time.
- Usage of High Frequency (HF) active RFID tags against passive Low frequency (LF) RFID tags for better performance and flexibility of users.

DISADVANTAGES

- While **R**adio **F**requency **ID**entification technology may be right for a large operation, for a smaller one you may want to consider the setup and ongoing costs carefully, and compare them with other technologies such as bar coding.
- RFID systems are often more expensive.
- RFID technology is harder to understand.
- Can be less reliable.
- RFID tags are usually larger and are application specific.

III. PROPOSED METHOD

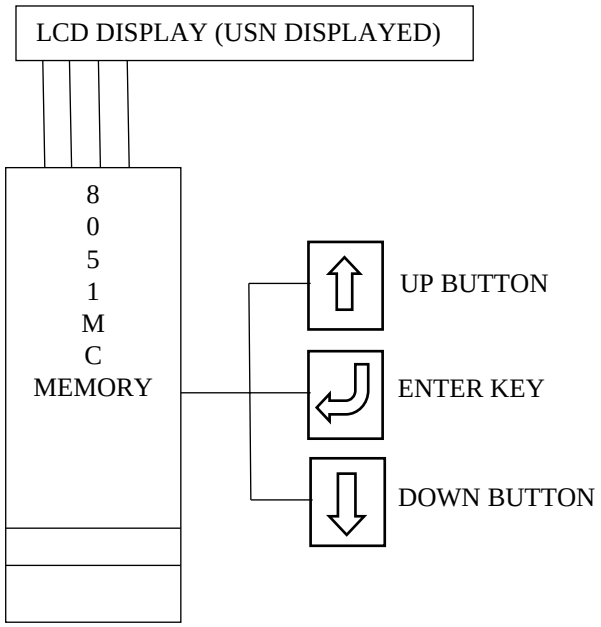

Figure 3: Block diagram of the proposed method

A handheld device consisting of 8051 microcontroller is programmed in such a way that the USN (University Serial Number) or roll number is displayed on the LCD display, Buttons are kept to mark present and absent. Each student's USN is unique and hence it is taken as the keyword and the present and absent is marked against it.

The above process is repeated till present/absent field is marked for the last student. The USN along with the present/absent field is stored in the memory

Published By:
Blue Eyes Intelligence Engineering
and Sciences Publication (BEIESP)

HARDWARE DESIGN AND SYNTHESIS

Here are some of the hardware components that we used in the working of proposed method.

8051 MICROCONTROLLER

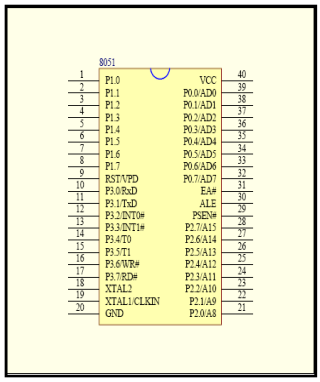

Figure 4: Pin out diagram of 8051 Micro Controller

Microcontrollers are usually dedicated devices embedded within an application. For example, microcontrollers are used as engine controllers in automobiles and as exposure and focus controllers in cameras. In order to serve these applications, they have a high concentration of on-chip facilities such as serial ports, parallel input output ports, timers, counters; interrupt control, analog-to-digital converters, random access memory, read only memory, etc. May have one or two concerned with rapid movement of code and data from external address [6].

Special Microcontroller Features

- High performance RISC CPU.
- All single cycle instructions except for program branches which are two-cycle.
- Operating speed: DC- 20 MHz clock input DC-200 ns instruction cycle.
- Up to 8Kx 14 words of FLASH Program Memory, Up to 368x 8 bytes of Data
- Memory (RAM).
- Interrupt capability (up to 12 sources).
- Eight level deep hardware stack.
- Direct, Indirect and Relative Addressing modes.

Peripheral Features

- Timer0:8-bit timer/counter with 8-bit prescalar.
- Timer1:16-bit timer/counter with prescalar can be incremented during SLEEP via external crystal/clock.
- Timer2:8-bit timer/ counter with 8bit period register, prescalar and postscalar.
- Two Capture ,Compare, PWM modules
- -Capture is 16-bit, max. resolution is 12.5 ns
- -Compare is 16-bit, max. resolution is 200 ns
- -PWM max. Resolution is 10- bit [2].

Pin number	*Use*
1 to 8	P1.0 to P1.7- Can be used as I/O port.
9	RST- Reset pin.
10	RxD- It is serial I/P pin for Asynchronous communication and serial O/P pin for synchronous communication. It indicates the data that has been received from the connected module (which is an output from the connected module).
11	TxD-It is serial data transmit pin. It indicates the data to be transmitted over the connected module (which is an input to the connected module).
12 & 13	INT0# and INT1#- External Interrupt pins.
14 & 15	T0 and T1- Internal timers. These are clock inputs for counter 0 and counter 1.
16	WR- It is signal for writing to external memory.
17	RD- It is signal for reading from external memory.
18 & 19	XLAT2 and XLAT1- Oscillator input pins.
20	GND- Ground pin.
21 to 28	P2.0 to P2.7 and A8 to A15- Can be used as I/O port.
29	PSEN#- Means Program Store Enable.
30	ALE- Means Address Latch Enable. If it is 1, then Address on AD 0 to AD 7. If it is 0, then Data on AD 0 to AD 7.
31	EA#- It is External Access pin.
32 to 39	P0.7 to P0.0 and A7 to A0- Can be used as I/O port.
40	Vcc- 5V supply.

Table 1 Pin diagram of 8051 integrated chip

The table 1 explains the pin description of microcontroller chip which is a 40 pin Integrated Chip (IC).

LCD DISPLAY

Liquid Crystal Display also called as LCD is very helpful in providing user interface as well as for debugging purpose. A liquid crystal display (LCD) is a flat panel display that uses the light modulating properties of liquid crystals (LCs). LCD Modules can present textual information to user [1].

A 16×2 LCD module type number JHD162A is used in this project to display student's USN. It consists of 16 rows and 2 columns of 5×7 or 5×8 LCD dot matrices. It is available in a 16 pin package with back light, contrast adjustment function and each dot matrix has 5×8 dot resolution .VEE pin is meant for adjusting the contrast of the LCD display and the contrast can be adjusted by varying the voltage at this pin.

The JHD162A has two built in registers namely data register and command register. Data register is used for placing the data to be displayed, and the command register is used to place the commands. The 16×2 LCD module has a set of commands each meant for doing a particular job with the display. High logic at the RS pin will select the data register and Low logic at the RS pin will select the command register, the pin diagram is shown in figure 6.

Published By:
Blue Eyes Intelligence Engineering
and Sciences Publication (BEIESP)

If we make the RS pin high and the put a data in the 8 bit data line (DB0 to DB7), the LCD module will recognize it as a data to be displayed. If we make RS pin low and put a data on the data line, the module will recognize it as a command [8].

R/W pin is meant for selecting between read and write modes. High level at this pin enables read mode and low level at this pin enables write mode. E pin is for enabling the module. A high to low transition at this pin will enable the module.DB0 to DB7 are the data pins. The data to be displayed and the command instructions are placed on these pins. LED+ is the anode of the back light LED and this pin must be connected to

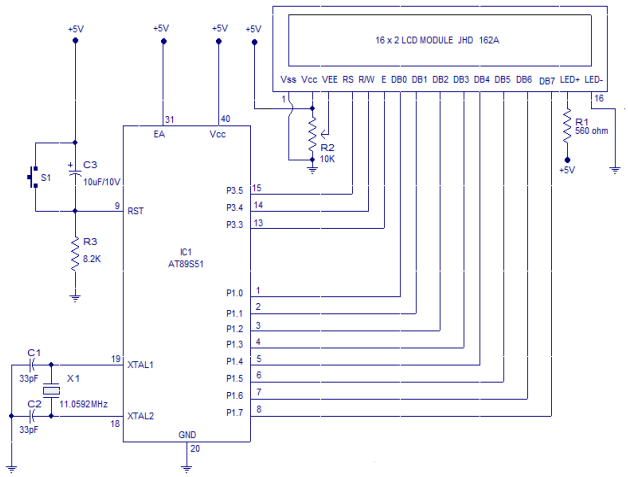

Figure 5: Circuit diagram of LCD display connected to the 8051 microcontroller

Vcc through a suitable series current limiting resistor. LED- is the cathode of the back light LED and this pin must be connected to ground as shown in figure 5 [3].

8051 MICROCONTROLLER BOARD

The above figure shows the development board used in this project; LCD unit is used to display the USN. The RS232 driver on board allows easy connection with PC or other embedded hardware. The board has User buttons to mark the student status as present or absent, and a special key is dedicated to send the data out to the computer via serial port, and status LEDs [9].

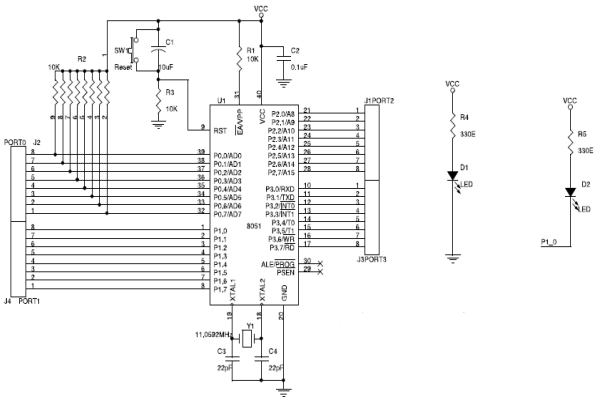

Figure 6: 8051 evaluation board

RS232 (serial port) socket, is used for communication Quartz crystal with 11.0592 MHz frequency, reset button, power plug-in jack, an LED for power ON and OFF, an LCD display slot and a slot to place 8051 IC[pv89v51rd2].

The MAX232 is an integrated circuit that converts signals from an RS-232 serial port to signals suitable for use in TTL compatible digital logic circuits. The MAX232 is a dual driver/receiver and typically converts the RX, TX, CTS and RTS signals [5].

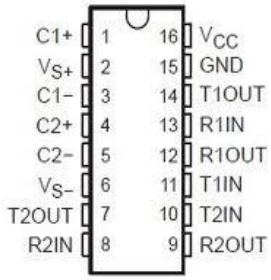

Figure 7: Pin diagram of MAX232 IC

The tables 3 explain the pin description of MAX232 IC.

Pin number	Use
1 & 3	C1+ & C1-: External capacitance of positive voltage multiplier unit.
2 & 6	Vs+ & Vs-: Output of positive and negative voltage of multiplier unit respectively.
4 & 5	C2+ & C2-: External capacitance of negative voltage multiplier unit.
7 & 14	T2OUT & T1OUT: Output of transmitter data (levels RS – 232).
8 & 13	R2In & R1IN: Input of receiver data (levels RS – 232).
9 & 12	R2OUT & R1OUT: Output of receiver data (levels TTL/CMOS).
10 & 11	T2IN & T1IN: Input of transmitter data (levels TTL/CMOS).
15	GND: Ground.
16	Vcc: Supply voltage

Table 2: Pin description of MAX232 IC

IV. DETAIL SOFTWARE DESCRIPTION

KEIL SOFTWARE

Keil offers an evaluation package that will allow the assembly and debugging of files 2K or less. After the hex file is generated successfully using the above software, **FLASH MAGIC** software is used to burn the program on to the chip [4].

FLASH MAGIC SOFTWARE

It is software which is used to burn the HEX file created by the KEIL software to the nxp's microcontroller chip. A HEX file is attached to the FLASH MAGIC software then START button is pressed to burn the HEX file into the chip. COMP port is to be selected first in which the serial port is connected. BAUD RATE specifies at what rate the data should be transferred, the optimum value for that is 9600.

TERMINAL SOFTWARE

Terminal is software which can be used in the windows environment to communicate with the serial port.

Published By:
Blue Eyes Intelligence Engineering
and Sciences Publication (BEIESP)

Serial port is used to communicate with the microcontroller; the terminal software is used to get the attendance status of the students in the system from the serial port. The baud rate, com port had to be set first as shown in figure 9.

V. CODE

The working code which is burnt into the 8051 microcontroller is given below. I have taken the 5 students and 3 subjects in this code.

```
        call delay
        mov a,#38h
        call comd
        mov a,#0ch
        call comd
        mov a,#06h
        call comd
        mov a,#80h
        call comd
upxx:
;********************
mov dptr,#tittle
call chrsnd
mov a,#0c0h
call comd
;********************
upx: nop
        mov a,#0c0h
        call comd
        mov dptr,#subj1
        call chrsnd
up: nop
      call keysense
      cjne a,#0ffh,dwn
      sjmp up
      call chrsnd
      call attend
      ret
gtc: mov 34h,#0ffh
        mov a,#0c0h
        call comd
        mov dptr,#colcode1
        call chrsnd
        call attend
        mov a,#0c0h
        call comd
        mov dptr,#colcode2
        call chrsnd
    call attend
    mov a,#0c0h
    call comd
    mov dptr,#colcode3
    call chrsnd
    call attend
    mov a,#0c0h
    call comd
    mov dptr,#colcode4
    call chrsnd
    call attend
    mov a,#0c0h
    call comd
    mov dptr,#colcode5
    call chrsnd
    call attend
    ret
ada: mov 34h,#0ffh
        mov a,#0c0h
        call comd
        mov dptr,#colcode1
        call chrsnd
dwn: cjne a,#02h,up1
        call matham
        mov 40h,34h
        sjmp upxx
up1: cjne a,#03h,up
        mov a,#0c0h
        call comd
        mov dptr,#subj2
        call chrsnd
upd: nop
        call keysense
        cjne a,#0ffh,dwnd
        sjmp upd
dwnd: cjne a,#01h,up1d
         call upx
up1d: cjne a,#02h,up2d
         call gtc
         ; mov41,34h
up2d: cjne a,#03h,upd
         mov a,#0c0h
         call comd
         mov dptr,#subj3
         call chrsnd
 updq: nop
         call keysense
         cjne a,#0ffh,dwndq
         sjmp updq
dwndq: cjne a,#01h,up1dq
          call upd
up1dq: cjne a,#02h,up2dq
          call ada
          ;mov 42h,34h
up2dq: cjne a,#03h,updq
          sjmp upx
matham: mov 34h,#0ffh
 mov a,#0c0h
            call comd
            mov dptr,#colcode1
   mov a,#'A'
   call datae
   mov a,34h
   clr c
   rrc a
   mov 34h,a
up2dw: cjne a,#03h,updw
          mov a,34h
          setb c
          rrc a
          mov 34h,a
          ret
u1: jnb p1.1,h1
     sjmp u1
h1: nop
here: jnb p1.1,here
        mov a,#80h
        call comd
        call chrsnd
        call attend
        mov a,#0c0h
        call comd
        call attend
        mov a,#0c0h
        call comd
        mov dptr,#colcode2
        call chrsnd
        call attend
        mov a,#0c0h
        call comd
        mov dptr,#colcode3
        call chrsnd
        call attend
        mov a,#0c0h
        call comd
        mov dptr,#colcode4
        call chrsnd
        call attend
        mov a,#0c0h
        call comd
        mov dptr,#colcode5
        call chrsnd
        call attend
        mov a,#0c0h
        call comd
        mov dptr,#colcode5
        call chrsnd
        call attend
        jnb p0.2,l1
datae:setb p3.5
        clr p3.6
        setb p3.7
        mov p2,a
        call delayir
        clr p3.7
        cjne a,#0ffh,dwndw
        sjmp updw
dwndw:
   cjnea,#01h,up1dw
   nop
up1dw:cjne a,#02h,up2dw
          mov a,#0ceh
          call comd
updw: nop
         call keysense
j1: jnb p0.0,j1
s1: jb p0.1,s2
     mov a,#02h
j2: jnb p0.1,j2
s2: jb p0.2,s3
     mov a,#03h
j3: jnb p0.2,j3
l1: nop
    ret
keysense: mov a,#00h
              jb p0.0,s1
              mov a,#01h
s3: ret
attend:
tittle:        db        "I        S
DEPARTMENT",0
subj1: db " MATHS    ",0
subj2: db "  GTC      ",0
subj3:     db     "              ADA
",0colcode1:  db  "  1DS11IS001
",0
colcode2: db " 1DS11IS002  ",0
colcode3: db " 1DS11IS003  ",0
colcode4: db " 1DS11IS004  ",0
colcode5: db " 1DS11IS005  ",0
end
```

Table 3: Assembly code for the proposed work using 8051

DESIGN ISSUES

The designer of an embedded system has to make many important decisions. The nature of the application or the product that has to be designed presents certain requirements and constraints.

COST

The cost of electronics in many embedded applications has to be low. The cheapest solution is realized if a single microcontroller chip suffices for the implementation of all functions that must be provided. This is possible only if there is sufficient I/O capability and enough on-chip memory to hold the necessary software.

I/O CAPABILITY

Microcontroller chips provide a variety of I/O resources. This ranges from having simple parallel and serial ports to extensive support that includes counter, timer, A/D and D/A conversion circuits.

Published By:
Blue Eyes Intelligence Engineering
and Sciences Publication (BEIESP)

The number of available I/O lines is important. Without sufficient I/O lines it is necessary to use external circuitry to make up the shortfall. If the microcontroller had four parallel ports, rather than two, it would be possible to connect each seven segment display to one port.

SIZE

Microcontroller chips come in various sizes. If an application can be handled adequately with an 8-bit microcontroller, then it makes no sense to use a 16-bit chip which is likely to be more expensive, physically larger, and consume more power. The majority of practical applications can be handled with relatively small chips. In recent years, the largest number of chips sold has been of the 8-bit type, followed by the 4-bit and 16-bit types [7].

POWER CONSUMPTION

Power consumption is an important consideration in all computer applications. In high-performance systems the power consumption tends to be very high, requiring some mechanism to dissipate the heat generated. In many embedded applications the consumed power is low enough so that it is not necessary to worry about heat dissipation. However, these applications often involve battery powered products, so the life of the battery, determined by power consumption, is a key factor [10]. Power consumption is reduced if CMOS technology is used to fabricate the microcontroller chip.

SNAPSHOTS OF IMPLEMENTATION

Figure 8: Snapshot of the proposed working model

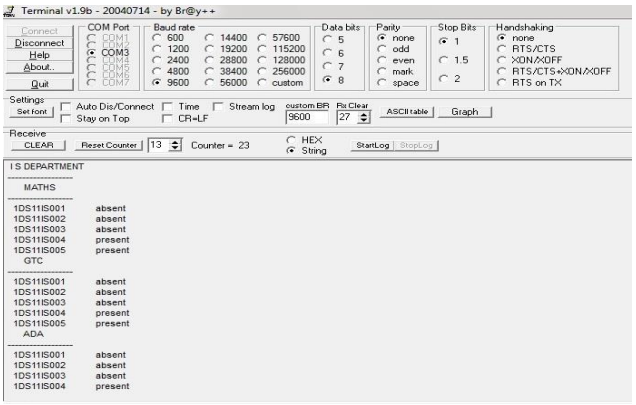

Figure 9: Snapshot of the output generating in the software

FUTURE WORK

Using the microcontroller technology, the present work can be enhanced by adding more storage capacity by interfacing Flash memory devices to microcontroller and interfacing networking modules (like GSM module, GPRS module, etc.) to send attendance status to mobile phones via SMS [Short Message Service] and even the E-MAIL can be sent .Introducing biometrics and face recognition or voice recognition to it will improve the automation in taking attendance.

Field **P**rogrammable **G**ate **A**rrays (**FPGA**s) provide an attractive medium for implementing systems on single chips. Unlike the microcontroller chips, which provide a designer with a set of predefined functional units, the FPGA devices allow complete freedom in the design process. They make it easy to include certain standard units and then build the rest of the system as desired.

VI. CONCLUSIONS

This paper is based on microcontrollers. As this is based on PV89V51RD2 IC which is commonly used IC, the control and programming is quite easy. This is just a humble effort to produce a prototype for a device which helps in keeping an exact record of student attendance using our device. This system can be easily operated as there is no much complexity is involved in it. This paper has been a humble effort to produce a prototype for a device which helps in keeping an exact record of student attendance using embedded system, and we believe our device will find use in various day to day fields.

ACKNOWLEDGMENT

This paper could not be completed without my parents Mr.SATEESH H BHANDARI (who helped me a lot) and Mrs.SAVITA G ADPEKAR, who encouraged and challenged me through my academic program. Without you, this paper would have taken years off my life. I would like to acknowledge my friend Mr.SHREYAS S, most especially to my family, friends and especially to God, who made all things possible. I cannot express what I owe them for their encouragement and whose patient love enabled me to complete task.

Published By:
Blue Eyes Intelligence Engineering
and Sciences Publication (BEIESP)

REFERENCES

[1] 8051 microcontroller tutorial by Donal Heffernan University of Limerick May-2002
[2] Simple Microcontroller projects in c for 8051 by Dogan Ibrahim.
[3] Programming and Interfacing the 8051 Microcontroller in C and Assembly by Sencer Yeralan, P.E., Ph.D.Helen Emery Rigel Press, a Division of Rigel Corporation.
[4] Basic Tutorial for Keil Software Written by www.MicroDigitalEd.com
[5] A Simple RS232 Guide Posted on 12/12/2005 By Jon Ledbetter Updated 05/22/2007
[6] http://www.circuitstoday.com/8051-programming-tutorial-chapter-1
[7] http://ece.jagansindia.in/2011/08/how-to-write-program-for-8051-microcontro/
[8] http://www.botskool.com/user-pages/tutorials/electronics/2x16-lcd-and-4x4-keypad- interfacing-8051-assembly-language
[9] http://www.w3schools.com/default.asp
[10] http://www.mlees-robotronics.in

Sahana S Bhandari presently studying B.E degree in Department of ISE, under VTU at Dayananda Sagar College of Engineering Bangalore, India. Her areas of interest includes WPT, embedded technology, smart surveillance and Social robotics and published two journals on WPT.

Published By:
Blue Eyes Intelligence Engineering and Sciences Publication (BEIESP)