International Journal of Engineering and Advanced Technology (IJEAT)
ISSN: 2249-8958 (Online), Volume-2 Issue-3, February 2013

Modular Architecture for Industrial Automation

Vakkalagadda Prasad, MadaYaswanth Manikanta, M.V.D Prasad

Abstract:- Industrial automation is the wide area of FPGA based nodes and zigbeebasedcommunicationdevoted to industrial applications, Commercialapplications andmedical equipment. Industrial automation which are mainly depend on the power systems and requires to control over long distances which require wireless sensor networks and Zigbee based communication systems. The wireless technology require for the sensing, processing, power monitoring and communication among the industrial machines. These can be achieved by the various technologies like FPGA Based nodes for wireless sensor networks andZigbee based communication etc. This paper proposes a digital system for the sensing, processing ,power monitoring and communication using the FPGA Based nodes for wireless sensor networks and the Zigbee based technology.The growth of sensor networks during the last years is a fact and within this field, wireless sensor networks are growing particularly as there are many applications that demand the use of many nodes even hundreds or thousands. More and more applications are emerging to solve several problems in data acquisition and control in different environments, taking advantage of this technology. In this context, hardware design of the sensor network node becomes critical to satisfy the hard constraints imposed by wireless sensor networks, like low power consumption, low size and low cost. With this goal in mind, we propose a modular architecture for the nodes, composed of four layers: communication, processing, power supply and sensing. The purpose is to minimize the redesign effort as well as to make the node flexible and adaptable to many different applications. In a first prototype of the node, we present a node with a mixed design based on a microcontroller and an FPGA for the processing layer and Zigbee technology for communications.Zigbeeprotocol as the communication medium between the transmitter and receiver modules which transfers the data efficiently.

I. INTRODUCTION

Measurement and control of all kind of parameters in several application scenarios raises some problems and design challenges for researchers. Wireless sensor networks appear as a solution, where hundreds or thousands of sensor nodes take measurements from the environment, process the information and communicate this data to the network and to the final user This field has grown enormously during the last years and it is expected that this trend continues in the future These networks are composed of nodes with several constraints due to the nature of the wireless sensor network field, like very low power consumption or very low cost and reliability of the nodes. With sensor networks it is possible to improve the measurement procedure since human intervention is reduced almost totally. The centralized architecture(as shown in fig1,fig2) for the system where the central node acts as the master and the sensors/actuators as slaves,The master takes information from the slaves, processes it and acts consequently. This approach presents several drawbacks like bottlenecks in the central node and high dependence on the reliability of the master.

Manuscript published on 28 February 2013.
***** Correspondence Author (s)
Vakkalagadda Prasad*, Electronics and communication engineering, K L University, Guntur, India.
MadeYaswanth Manikanta, Electronics and communication enginnering, K L University, Guntur, India.
TM.V.D Prasad, Assistant Professor, Department of Electronics and Communication, K L University, Guntur, India.

On the other hand, a distributed architecture arises as another approach, in which each node processes locally the signals from sensors, and communicates them to the network. In this context, if a node fails the network continues working. Furthermore, the traffic of information is reduced, because each node can take decisionslocallyAs it has been said before, the wireless sensor networks field imposes several constraints to the researchers. Because of this, hardware design of the network nodes becomes critical. This is the point in which this paper is focused. Normally, each application fixes its requirements, and the engineers have todesign the system from scratch. This makes redesigning hard and expensive both interms of time and cost. To solve this problem it is possible to divide the node infunctional blocks or layers and so, the redesign effort concentrates in each layerseparately. With this approach, it is possible to reuse layers and interchange betweendifferent solutions depending on the application requirements. Keeping this idea in mind, a modular architecture of four layers is proposed for the wireless sensor network. These four layers are: communication, processing, power supply and sensing/actuation. Each layer fulfils a specific functionality in the node, and the layers can change between different applications and moreover, it is possible to have an heterogeneous network with nodes composed of different layers. Layers are bonded through vertical connectors which are common to all the layers. As all the layers use the same connectors in the same position, reusability and interchangeability are much easi In this section, the modularity concept and the four layers (as shown in fig3) of the architecture will be detailed.

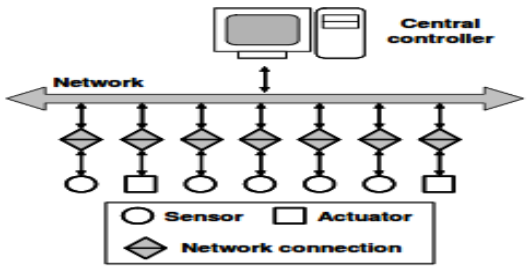

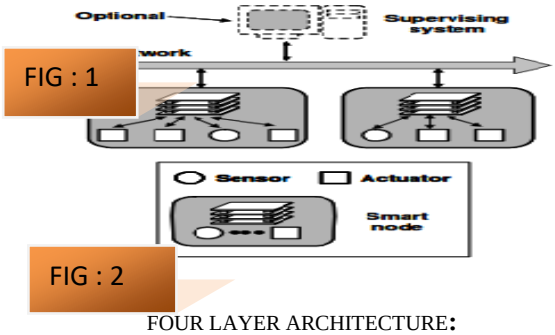

FIG : 1

FIG : 2

FOUR LAYER ARCHITECTURE:

Published By:
Blue Eyes Intelligence Engineering and Sciences Publication (BEIESP)

Modularity: Modularity is an important feature of the node. The purpose is to have a modular platform, flexible and adaptable to several applications and scenarios, and to be able to reuse and interchange between different layers when the application changes. Moreover, the architecture must satisfy several design requirements as it has been said before. To achieve this goal, a four layers modular architecture (fig 4) is proposed.

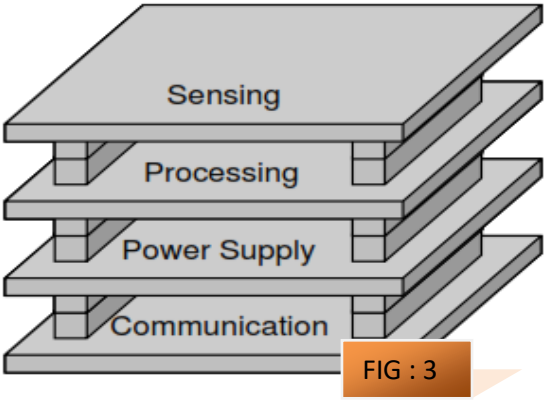

FIG : 3

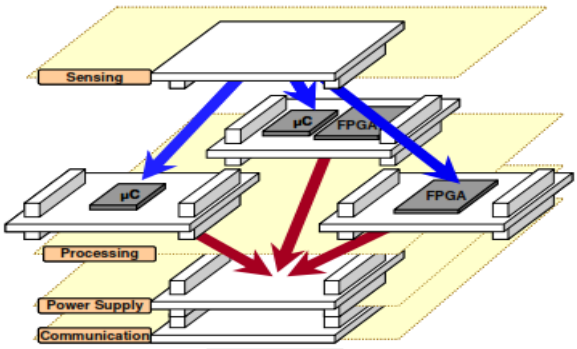

FIG : 4

With a modular platform new advantages arise, like easy redesigning or the possibility of reusing and interchanging layers, which reduces cost and time. Furthermore, with this architecture new research possibilities can be tested easily due to the versatility and flexibility of the system. In fact, the node is intended for both research and as a demonstrator of new applications. The modularity is achieved thanks to the vertical connectors (refer fig 5). These connectors fulfill the electrical and mechanical connection, and moreover, the logic connection, that is, the connections between the different devices of the architecture (µC, FPGA, sensors, etc.). The connections are fixed in order to standardize the physical architecture of the node. So, it is possible to interchange between different layers, and design new layers in an easy way. Finally, the result is that to interchange between different layers (two sensing layers for example) the only thing to be done is to take out the old layer from the node, take the new layer and insert it in the node, using the Vertical connectors(refer fig 5). The use of vertical connectors is useful not only to make the mechanical andelectrical connections, but to reduce node size, taking advantage of the vertical dimension. All these factors make the node very robust and compact. The signals are distributed following some conventions.

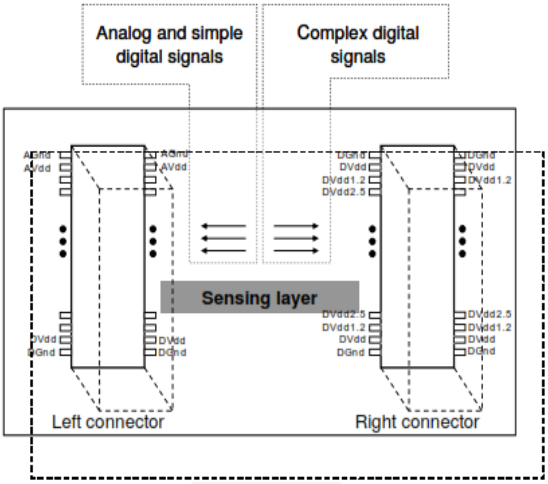

FIG : 5

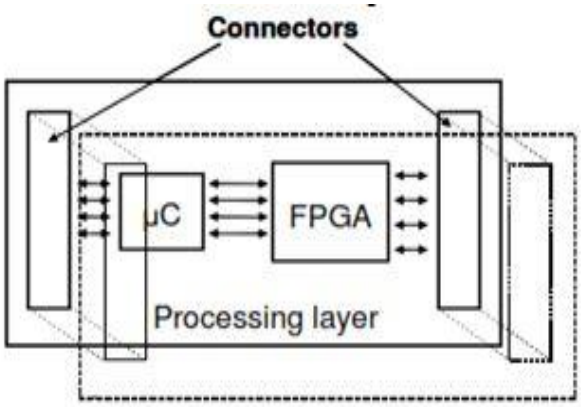

FIG : 6

Assuming that the µC is in the left side and the FPGA is in the right side (refer fig 6), the connectors will be called left and right connector. In this way, analog and simple digital sensor signals are connected to left connector pins, as they can be connected directly to the µC. On the other hand, complex digital signals are bonded to the right connector in order to be connected to the FPGA that can easily handle several signals or protocols at the same time thanks to its concurrency (all the logic is executed simultaneously). Moreover, supply and ground signals have been placed in the corners of the connector, as can be seen in above figure. An example of modularity can be seen in below figure. There, two different processing layers are shown, one of them with a µC and an FPGA and the other one only with a µC. The first example is a processing layer which should be used in applications which need fast processing or with sensors with complex digital interfaces. The µC deals with simple analog signals and with communications, and the FPGA releases the µC from the tasks related to complex sensors, for example. The second example should be used in applications with analog sensors (the µC has an integrated ADC), or perhaps simple digital sensors, where the µC can face all the work without problems.

Published By:
Blue Eyes Intelligence Engineering
and Sciences Publication (BEIESP)

A. Processing Layer:-

This module (refer fig 6) provides the smart sensor with intelligence. Here, the signals from the sensors are converted into appropriate digital and processed signals. Moreover, the control of the communications is carried out in this module. Searching of neighbor nodes, setting and breaking links, and management of all the tasks related with the network are controlled here by generating commands to the Bluetooth module, and interpreting commands from the Bluetooth module and other network nodes. Power saving modes are managed here too in order to extend the battery life. Thesis an important matter in wireless sensor networks because it is required that the network works autonomously for a long time without human intervention. A mixed microcontroller FPGA design is proposed in the first implementation in order to satisfy different requirements for several applications. Versatility is the aim of this election, existing other possibilities such as using the microcontroller only, or the FPGA only.

i.The Microcontroller:

The µC is an ADUC812 from Analog Devices. This device incorporates 8KB flash memory, 256 bytes of RAM, ADC, DAC, UART and SPI ports, four general I/Ports, and three timers among others peripherals. The µC manages the communications, controlling the Bluetooth module directly through its UART port, and controls the signals from analog and simple digital sensors as well. The clock frequency in the first prototype is 12 MHz, extendable to16 MHz

ii.The FPGA:

The FPGA is a Spartan III from Xilinx, specifically an XC3S200 (which integrates *200k* logic gates). This device gives the node a big freedom to adapt to new applications, and makes the system versatile in its processing capabilities. The main feature of FPGAs is concurrency. This allows the processing layer to manage complex digital sensors in a fast way, releasing the µC of these tasks. In this context, the µC deals with communication and simple sensors, and the FPGA processes the most complex signals. The FPGA needs three different power voltages, specifically 3.3, 2.5 and 1.2 V. These voltages come from the power supply layer.

B. Sensing layer:

This module includes sensors and actuators to interact with the environment. According to the use of the smart sensor network, multiple combinations are possible. Multiple kinds of sensors can be included in this level, and actuators may be incorporated as well in order to act according to parameters measured from the environment. In a first application, two different sensor layers have been designed and manufactured. The former is composed of analog and digital sensors, and the latter only includes digital. This is the first demonstration of modularity in the nodes. The digital version for sensor layer includes an accelerometer and three different temperature sensors. In this way, there are four different signal formats to be processed in the FPGA in order to explore the different interfaces characteristics. In the analog and digital version of sensor layer, sensors of temperature, humidity, infrared and illumination are included. This layer is controlled using both the µC and the FPGA.

C. Communication layer:-

Wireless technology which plays important role in IT sector over the past years.it is suitable for the industrial control networks as well providing safety and control of wireless sensor networks. In the aspect of faster installation, maintaince and cost savings zigbee is the short range, low rate wireless technology. It has some supporting features like scalability, timeliness and power efficiency. For the transmission rate, jitter and link readability, Zigbee is the best as a communication layer. The wireless protocol of IEEE 802.15.4 satisfy these entire requirements of Zigbee.

III. ABOUT ZIGBEE:

Zigbee is dedicated to devolving a complete networking technology for wireless connectivity. It is designed as low cost, low power consumption and good data rate wireless mesh technology. The Zigbee specification identifies three kinds of devices that incorporate Zigbee devices.

I. A coordinator, which organizes the network and maintains routing tables.
II. Routers, which can talk to the coordinator, to other routers and to reduced-function end devices.
III. Reduced-function end devices, which can talk to routers and the coordinator, but not to each other.

The above points can ensure that there is minimizing the power consumption in long battery life in battery-powered devices.zigbee protocol can be referred in the fig7. There are various types of network Topologies like star topology, mesh topology, bus topology, ring topology and cluster tree topology(refer fig8).

FIG : 7

NETWORK TOPOLOGIES

Published By:
Blue Eyes Intelligence Engineering
and Sciences Publication (BEIESP)

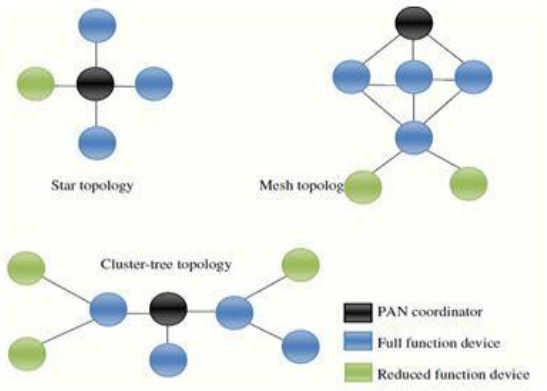

The hardware description of the transmitter and receiver(refer fig 9) modules are described as below the required hardware elements are mainly microcontroller for the function of data storage, data processing and human interfacing with the outer environment. It require ADC(analog to digital converter) for converting the analog parameters like voltage and current.LCD display and the Zigbee transmitter and receiver also require to transmit and receive the data.

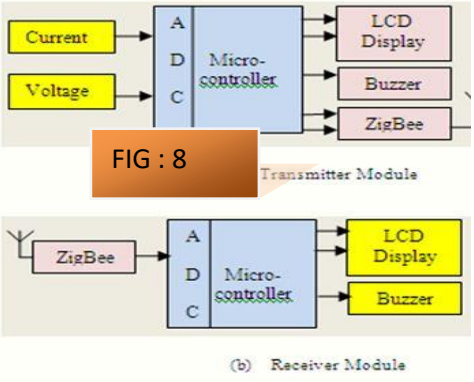

IV. CONCLUSION

In current Proposal these control techniques are used to industrial automation by using simple wireless sensor networks and zigbee protocols. These techniques are often cheap and low power consumption. Wireless communication is a cheap and easy way to provide network communication at places where there is no wired infrastructure. In addition, because the communicating entities can freely move, one can place the monitoring system wherever it is required without the cost incurred with cabling when adopting the wired communication. These having the wide area of industrial applications, commercial applications and medical equipment applications.

REFFERENCES

[1]. http://en.wikipedia.org/wiki/Wireless sensor network
[2]. http://citeseerx.ist.psu.edu/viewdoc/download?doi=10.1.1.126.6482&rep=rep1&type=pdf
[3]. http://en.wikipedia.org/wiki/OCARI
[4]. http://www.sciencedirect.com/science/article/pii/S1389128601003024
[5]. http://www.pervasive.ifi.lmu.de/adjunct-proceedings/demo/p077-080.pdf
[6]. Shizhuang Lin, Jingyu Liu, Yanjun Fang. "ZigBee Based Wireless Sensor Networks and Its Applications in Industrial", IEEE International Conference on Automation and Logistics, 2007 .pp:1979 – 1983
[7]. Christoph Spiegel, Sebastian Rickers, Guido H. Bruck, Peter Jung, Woojin Shim, Rami Lee, Jaehwang Yu. "Low Power Networks – The ZigBee Competition", 2009 IEEE
[8]. http://www.maxstream.net/wireless/zigbee.php
Zengyou Sun, Tao Zhao, Chenghua Che "Design Of Electric Power Monitoring System Based On ZigBee and GPRS", June 2009 IEEE

Vakkalagadda Prasad is born in Vellatur, GunturDistrict, Andhra Pradesh, India on 13th April 1992 and currently pursuing B.TECH 4th year in Electronics and Communication Engineering in K.L.University with specialization in Networking. Areas of interest are embedded systems and antenna

MadaYaswanthManikantais born in Guntur, Guntur District, Andhra Pradesh, India on 14th June 1992 and currently pursuing B.TECH 4th year in Electronics and Communication Engineering in K.L.University with specialization in Networking.Areas of interest are Embedded design and antenna.

MVD Prasadis born in vijayawada, **krishna** district**,** Andhra Pradesh, India **on 28th january 1983**,Assistant Professor Dept. of Electronics and Communication Engineering, KLUniversity. Worked in Avanthi'sresearch and tech acacemytill 2009-feb-2012. Areas of intrest are Optical communications and Embedded design.

Published By:
Blue Eyes Intelligence Engineering
and Sciences Publication (BEIESP)