International Journal of Engineering and Advanced Technology (IJEAT)
ISSN: 2249-8958 (Online), Volume-2 Issue-3, February 2013

Hysteresiscontrol of Multilevel Inverter

Jesinth santhaseelan.J, S.Jebarani Evangeline

Abstract- Multilevel inverters are used for converting DC to AC in places where the conversion is required. However harmonics are present in all types of multilevel inverters. This causes major problems in the output voltage as well as current. In order to reduce these harmonics, several methods are used among them hysteresis control is one of the powerful method. A three phase multilevel inverter with hysteresis current control is proposed to control the current in order to reduce the total harmonic distortion, current ripples and Control over maximum switching frequency and tested using MATLAB/Simulink.

Key words- Hysteresis modulation, multiband (MB).

I. INTRODUCTION

A multilevel inverter is a power electronic converter built to synthesize a desired AC voltage from several levels of DC voltages which the DC levels were considered to be identical in that all of them were batteries, solar cells, capacitors, etc.The multilevel inverter has gained much attention in recent years due to its advantages in lower switching loss better electromagnetic compatibility, higher voltage capability, and lower harmonics.

Several multilevel inverter topologies are;

- The diode-clamped,
- Flying capacitor, and
- Cascade H bridge structures.

The schemes of multilevel inverters are classified in to two types.

- The multicarrier sub harmonic pulse width modulation
- The multicarrier switching frequency optimal pulse width.

The THD will be decreased by increasing the number of levels. It is possible that an output voltage with low THD is desirable, but increasing the number of levels needs more hardware, also the control will be more complicated. It is a tradeoff between price, weight, complexity and a very good output voltage with lower THD. The hysteresis band current control is usedoften because of its simplicity of implementation. Also, besides its fast response current loop, the method does not need any knowledge of load parameters. However, the current control with hysteresis band has a disadvantage that the PWM frequency varies within a band because peak to peak currentripple is required to be controlled at all points of the fundamental frequency wave. The method of adaptive hysteresis-band current control PWM technique where the band can be programmed as a function of load to optimize the PWM performance is described in [3].

Manuscript published on 30 February 2013.
***** Correspondence Author (s)
Jesinthsanthaseelan.J, dept. Electrical and Electronics Engg/Karunya university/Coimbatore/India.
S.Jebarani Evangeline, dept. Electrical and Electronics Engg/Karunya university/Coimbatore/India.

The basic implementation of hysteresis current control is based on deriving the switching signals from the comparison of the current error with a tolerance band. This control is based on the comparison of the actual phase current with the tolerance band around the reference current associated with that phase.

if($c_e(t) \geq +h$) , then $u(t) = -1$ (1)

else if ($c_e(t) \leq -h$) , then $u(t) = +1$. (2)

It should be noted that h is a suitable hysteresis band, whosesize is determined by the maximum allowable switching frequencyof the switching devices, as well as the maximum permittedlevel of current distortion. A low value of h may lead toincreased switching actions, henceforth, larger switching losses,while a large value of h may result in increased distortion in thecontrolled current. Therefore, a tradeoff is always required indesigning the hysteresis band size.

The two-level hysteresis control is relatively straightforward with each hysteresis boundary being mapped essentially to one converter-phase-leg switched state. For multilevel converters, as larger number of output voltage levels are available, the task is to select a particular voltage level output to force the control variable to zero on an instantaneous basis once it exceeds certain bounding limits. Therefore, a multilevel hysteresis modulator (MHM) requires additional logic to select the appropriate voltage level at any time instant so as to confine the control signal within a specified hysteresis band.

The starting point toward the design of an adequate MHM could be the following: according to the instantaneous value of the controlled system variable (uc), the controller should suggest what is the most suitable voltage level required. At any instant, when ucexceeds a hysteresis limit, the next higher (or lower) voltage level should be selected in an attempt to force it within the specified limits. However, this new converter voltage level may not be adequate to return $uc$to the specified limits. When this happens, the converter should switch to the next higher (or lower as appropriate) voltage level, and the process should cease only when the correct voltage level is selected that reverses the direction of uc.

The flying capacitor, involves series connection of capacitor clamped switching cells. This topology has several unique and attractive features when compared to the diode-clamped inverter. One feature is that extraclamping diodes are not needed. The flying capacitor inverter has switching redundancy within the phase which can be used to balance the flying capacitors so that only one dc source is needed. The general concept of operation is that each flying capacitor is charged to one-half of the dc voltage and can be connected in series with the phase to add or subtract this voltage.

Published By:
Blue Eyes Intelligence Engineering and Sciences Publication (BEIESP)

II. NEED FOR HYSTERESIS MODULATION

The hysteresis modulation is a feedback current control method where the motor current tracks the reference current within a hysteresis band. The Fig.2 shows the operation principle of the hysteresis modulation. The controller generates the sinusoidal reference current of desired magnitude and frequency that is compared with the actual motor line current.

The upper switch of the inverter arm is turned off when the current exceeds the upper limit of the hysteresis band and the lower switch is turned on. As a result, the current starts to decay. The lower switch of the inverter arm is turned off when the current crosses the lower limit of the hysteresis band and the upper switch is turned on. As a result, the current gets back into the hysteresis band. So the actual current is forced to track the reference current within the hysteresis band.

A. Hysteresis

Hysteresis refers to systems that may exhibit path dependence or rate-independent memory. In a deterministic system with no dynamics or hysteresis, it is possible to predict the system's output at an instant at a given time. In a system with hysteresis, this is not possible; the output depends in part on the internal state of system and not only on its input. There is no way to predict the system's output without looking at the history of the input (to determine the path that the input followed before it reached its current value) or inspecting the internal state of the system.

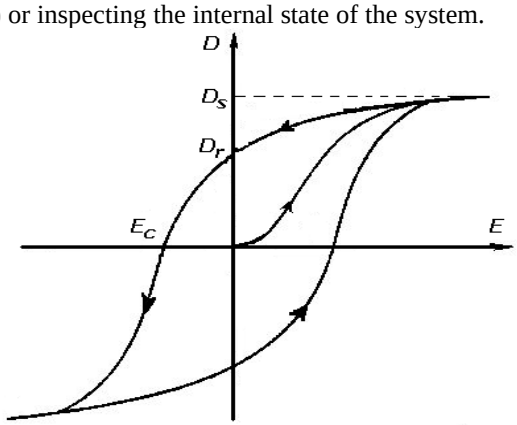

Fig.1. General Hysteresis technique diagram

Schmitt trigger are examples of electronic circuits that exhibit hysteresis, in this case by introducing a positive feedback, many physical systems naturally exhibit hysteresis.

III. PRINCIPLE OF HYSTERESIS MODULATION

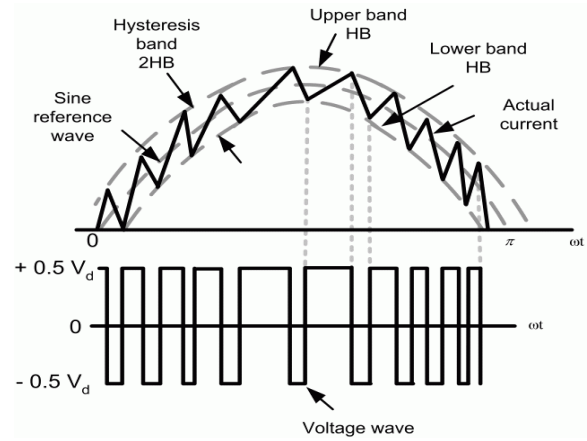

Fig.2. Hysteresis modulation principle and its waveform

Instead of using an externally generated triangle wave as it is typically done for PWM modulation, a self-oscillating hysteresis modulator makes use of the switching waveform generated at the output, in joining with an integrator to provide a triangular waveform to feed to a comparator. Comparing the actual current with the reference current pulses can be generated according to the hysteresis band 2HB.

IV. HYSTERESIS CURRENT CONTROLLER

The principle of this controller is to generate a new reference signal called $I_{ref.m}$, deduced from the sum of the reference current (I_{ref}) and a triangular carrier signal the frequency of which is chosen equal to the desired switching frequency.

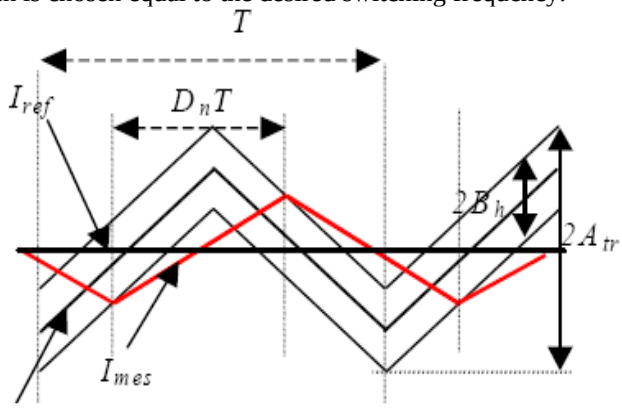

Fig.3. Hysteresis current waveform

In steady state, the switching frequency should existonly two intersections during each period between the current and it's modulated reference: the first one with the higher limit of the hysteresis controller and the second one with its lower limit. For a given switching frequency, the only parameters of the modulated hysteresis controller are the triangular signal amplitude A_{tr} and the hysteresis bandwidth.

V. WORKING OF HYSTERESIS CURRENT CONTROL OF FLYING CAPACITOR MULTILEVEL INVERTER

Published By:
Blue Eyes Intelligence Engineering
and Sciences Publication (BEIESP)

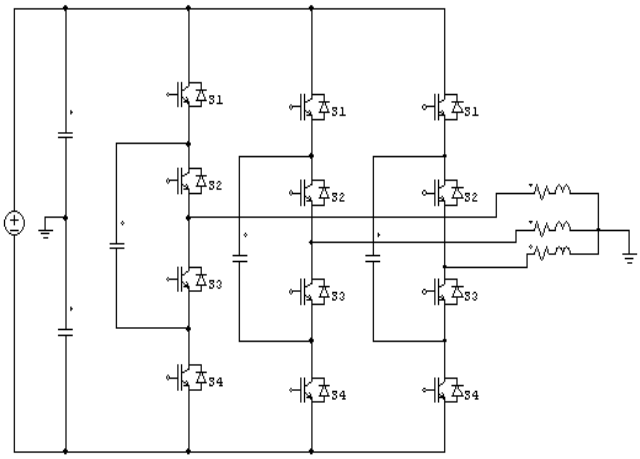

Fig .4. Circuit Diagram of three phase three level inverter using hysteresis controller modulation

Higher level inverters are able to meet the high voltage and power profiles with better harmonic spectrum at their outputs, without needing higher-rated power semiconductor devices. The number of achievable voltage levels is limited due to circuit layout, cost and packaging constraint.

A three-level flying capacitor inverter has been considered. Fig.5shows the schematic diagram of one leg of a single-phase three-level FCMLI.V_{dc} is the dc link of the inverter and C_1,C2 are flying capacitors, which are regulated using a control scheme at $3V_{dc}/4$,$V_{dc}/2$, and $V_{dc}/4$, respectively or$V_{c1}=V_{dc}$

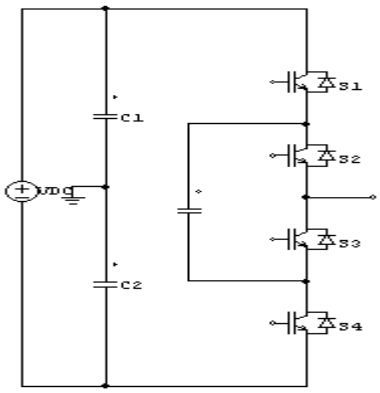

Fig .5. Circuit diagram for FCMI

In the operation of the inverter, each phase node (a, b, or c) can be connected to any node in the capacitor bank (V_1, V_2, V_3). Connection of the phase to positive node V_3 occurs when $S_1$and S_2 are turned on and to the neutral point voltage when S_2 and $S_3$are turned and the negative node V_1 is connected when $S_3$and $S_4$are turned on. The clamped capacitor C_1 charges when $S_1$and $S_3$are turned on and it discharges when $S_2$and $S_4$are turned on. The charge of the capacitor can be balanced by proper selection of the zero states. As with the three-level flying capacitor inverter, the highest and lowest switching states do not change the charge of the capacitors.

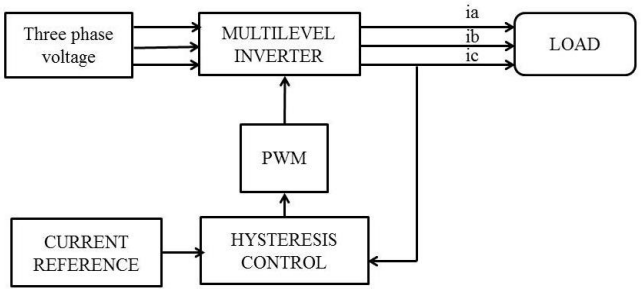

Fig.6. Block diagram of multilevel inverters

When the measured current ia,ib,ic are compared with reference current ia*,ib*,ic*, it gives the current error signals to the RL load and feedback through hysteresis controller gating signals are generated and we get output switched voltage. The current error is compared with the bands and the output voltage level is changed depending on the error band. The advantages of FCMI is Switching frequency depend on the Hysteresis band size,No dc tracking error, Better tracking performance.

VI. THREE LEVEL HYSTERESIS CONTROL

The output voltage of the inverter Van can be related to the parameter of simple R-L load ,where$V_{an}=V_{dc}$ (n=1/2 , 1/4, 0, -1/4 and -1/2, as a three-level inverter may select between voltage levels , $V_{dc}/4$,0,-$V_{dc}/4$,-$V_{dc}/2$and for $V_{c1}=V_{dc}$), i_a is the load direction[1],[5]. Then, it will cross "B" with a different slope, as the voltage level acting on it is now "0." In case of only one band " B" the extreme output voltage level will be applied at " B1".

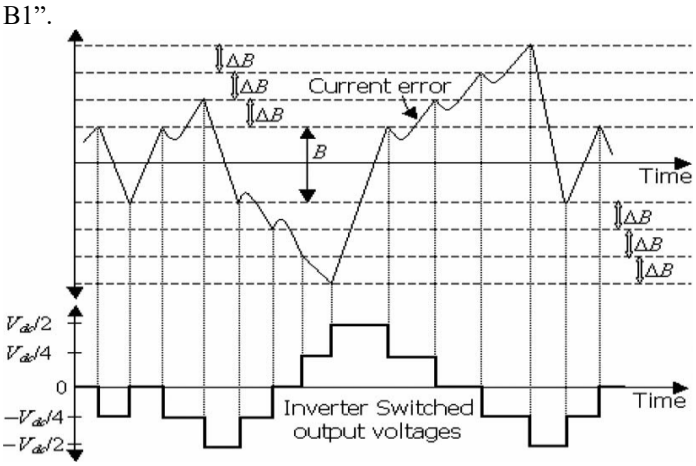

Fig.7.Three- level hysteresis control

Now, after introducing an extra band, the voltage level transition is like that as shown in Fig.7. At "B1,B2" the next voltage level is applied and since it is insufficient to force the current error in opposite direction, the next voltage level is applied at "+$V_{dc}/4$ As can be seen, by introducing an extra band, the uniformity in change in output voltage states +$V_{dc}/2$" occurs. Therefore, two bands are required to track the current using this method for a Three-level inverter and this number will increase with +$V_{dc}/2$output voltage levels. An extra band may be introduced optionally for the purpose, discussed [3],[4],[7].

Published By:
Blue Eyes Intelligence Engineering
and Sciences Publication (BEIESP)

The size of the main band "B1" is largely determined by the permitted level of current distortion. The other determining factors are load value, input voltage, and desired switching frequency. The second set of switching bands has different zones in order to provide a reliable and robust control for an -level inverter. Advantages of hysteresis control excellent dynamic response, Low cost and easy implementation.

VII. THREE PHASE INVERTER USING HYSTERESIS MODULATION

Input current waveform

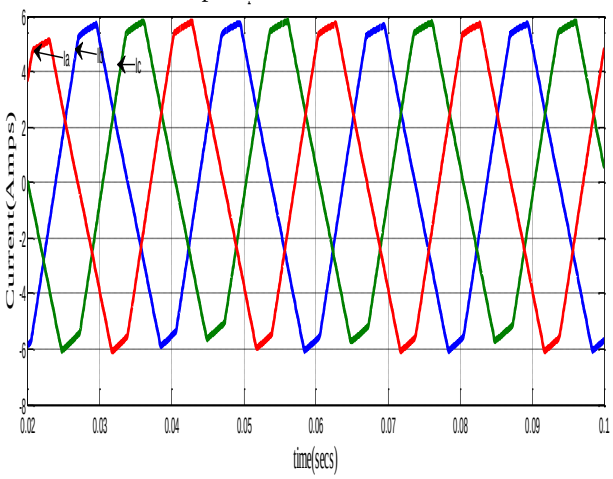

Fig.8. Three phase Input current error waveform

Inverter switched output voltage

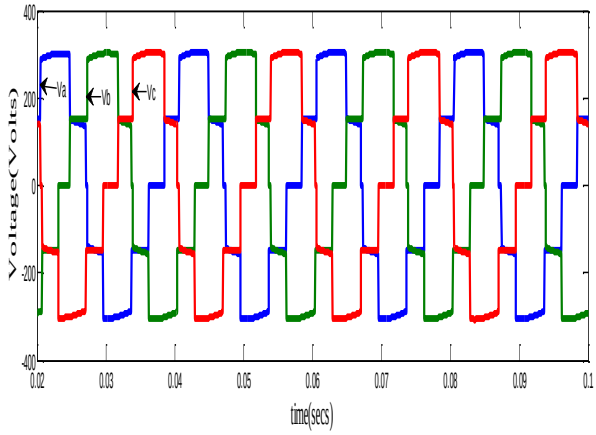

Fig.9.Three phase three level inverter switched output voltage

VIII. CONCLUSION

A hysteresis current control technique has been implemented for a three phase three-level FCMLI. A new flying capacitor voltage balancing scheme has been proposed for the FCMLI which uses the special charging or discharging of the flying capacitors to balance their voltages and at the same time producing the desired output line currents using hysteresis control. The topology has been simulated and the resultshows that the total harmonic distortion is reduced.

REFERENCES

[1] AnshumanShukla, *Member, IEEE*, ArindamGhosh, *Fellow, IEEE*, and Avinash Joshi, Hysteresis Modulation of Multilevel Inverters IEEE TRANSACTIONS ON POWER ELECTRONICS, VOL. 26, NO. 5, MAY 2011.

[2] S. Srikanthan, M. K. Mishra, and R. K. V. Rao, (2009) "Improved hysteresis current control of three-level inverter for distribution static compensator application," in Proc. IET Power Electron., vol. 2

[3] S. R. Bowes and D. Holliday, (2007) "Optimal regular-sampled PWM inverter control techniques," IEEE Trans. Ind. Electron., vol. 54.

[4] Z.Yao, L. Xiao, andY.Yan, (2009) "Dual-buck full-bridge inverter with hysteresis current control," IEEE Trans. Ind. Electron., vol. 56.

[5] AnshumanShukla, Student Member, IEEE, ArindamGhosh, Fellow, IEEE, and Avinash Joshi (2007) "Hysteresis Current Control Operation of Flying Capacitor Multilevel Inverter and Its Application in Shunt Compensation of Distribution Systems" IEEE TRANSACTIONS ON POWER DELIVERY, VOL. 22

[6] P. C. Loh, G. H. Bode, and P. C. Tan, (2005) "Modular hysteresis current control of hybrid multilevel inverters," in Proc. IEE Electric. Power Appl., vol.152.

[7] P. N. Tekwani, R. S. Kanchan, and K. Gopakumar, (2005) "Current-error space vector-based hysteresis PWM controller for three-level voltage source inverter fed drives," in Proc. IEE Electric. Power Appl., vol. 152.

Jesinthsanthaseelan. J is pursuing his M.Tech degree in Power Electronics and Drives from Karunya University, Coimbatore, Tamilnadu, India. His research area includes Power Electronics, Energy Generation and Renewable Energy.

S. Jebarani Evangeline is working as an Assistant Professor (SG) in Karunya University. She has completed her M.Tech degree from Karunya University, Coimbatore, Tamilnadu, India. She has a working experience of 9 years. Her research area includes Power Electronics & Drives and Automotive Electronics.

Published By:
Blue Eyes Intelligence Engineering and Sciences Publication (BEIESP)